US00D669966S

(12) United States Design Patent
Claussen

(10) **Patent No.: US D669,966 S**
(45) **Date of Patent: ** Oct. 30, 2012**

(54) **SPRAY HOOD**

(75) Inventor: **Steven W. Claussen**, Glenwood, MN (US)

(73) Assignee: **Alternative Energy, Inc.**, Willmar, MN (US)

(**) Term: **14 Years**

(21) Appl. No.: **29/396,580**

(22) Filed: **Jul. 1, 2011**

(51) **LOC (9) Cl.** **23-01**

(52) **U.S. Cl.** **D23/227**

(58) **Field of Classification Search** D23/213, D23/214, 227; 239/159, 288, 288.5; 47/1.7
See application file for complete search history.

(56) **References Cited**

U.S. PATENT DOCUMENTS

556,447	A	3/1896	Van Deusen
1,527,669	A	2/1925	Camp
1,669,435	A	5/1928	Wheeler
2,641,505	A	6/1953	Valois
4,379,522	A	4/1983	Elliott et al.
4,441,655	A	4/1984	Blumhardt
4,456,180	A	6/1984	Lury
4,634,051	A	1/1987	Dudley
4,711,398	A	12/1987	Ganderton et al.
4,736,888	A	4/1988	Fasnacht
4,947,581	A	8/1990	Claussen et al.
5,069,090	A	12/1991	Clark
5,155,933	A	10/1992	Claussen et al.
5,156,338	A	10/1992	Borland et al.
5,248,090	A	9/1993	Williamson
5,371,969	A	12/1994	Claussen et al.
D356,629	S	3/1995	Claussen et al.
5,398,874	A	3/1995	Dailey
5,520,335	A	5/1996	Claussen et al.
5,526,605	A	6/1996	O'Dougherty
D372,298	S	7/1996	Claussen et al.
6,047,901	A	4/2000	Pederson et al.
6,334,578	B1 *	1/2002	House 239/288.5
6,705,546	B2	3/2004	Bosch

FOREIGN PATENT DOCUMENTS

CA	689054	6/1964
FR	1314571	1/1963

OTHER PUBLICATIONS

"94-95" catalog illustrating "Hose Shank Nozzle Bodies and Vari-S-pacing Clamps," p. 61; Custom AG Products, Inc., Benson, MN; 1 page.

* cited by examiner

Primary Examiner — Robin V Webster
(74) *Attorney, Agent, or Firm* — Mueting, Raasch & Gebhardt, P.A.

(57) **CLAIM**

The ornamental design for a spray hood, as shown and described.

DESCRIPTION

FIG. **1** is an upper perspective view of a spray hood;
FIG. **2** is a front elevation view of the spray hood of FIG. **1**;
FIG. **3** is a rear elevation view of the spray hood of FIG. **1**;
FIG. **4** is a left side elevation view of the spray hood of FIG. **1**;
FIG. **5** is a right side elevation view of the spray hood of FIG. **1**;
FIG. **6** is a top plan view of the spray hood of FIG. **1**; and,
FIG. **7** is a bottom plan view of the spray hood of FIG. **1**.
The broken lines immediately adjacent areas of the design represent the bounds of the claimed design while other broken lines are directed to environment and are for illustrative purposes only; features illustrated in broken lines form no part of the claimed design.

1 Claim, 7 Drawing Sheets

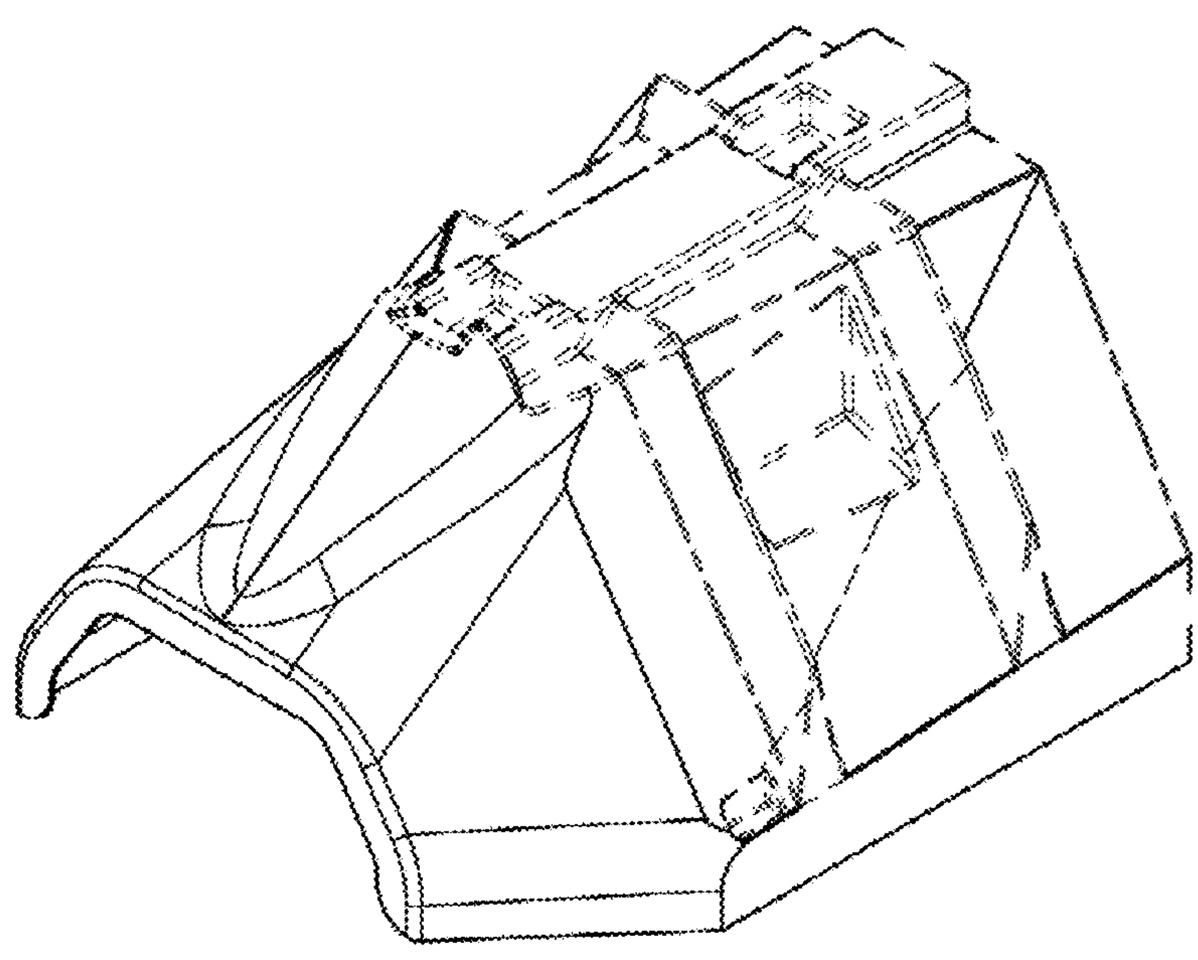

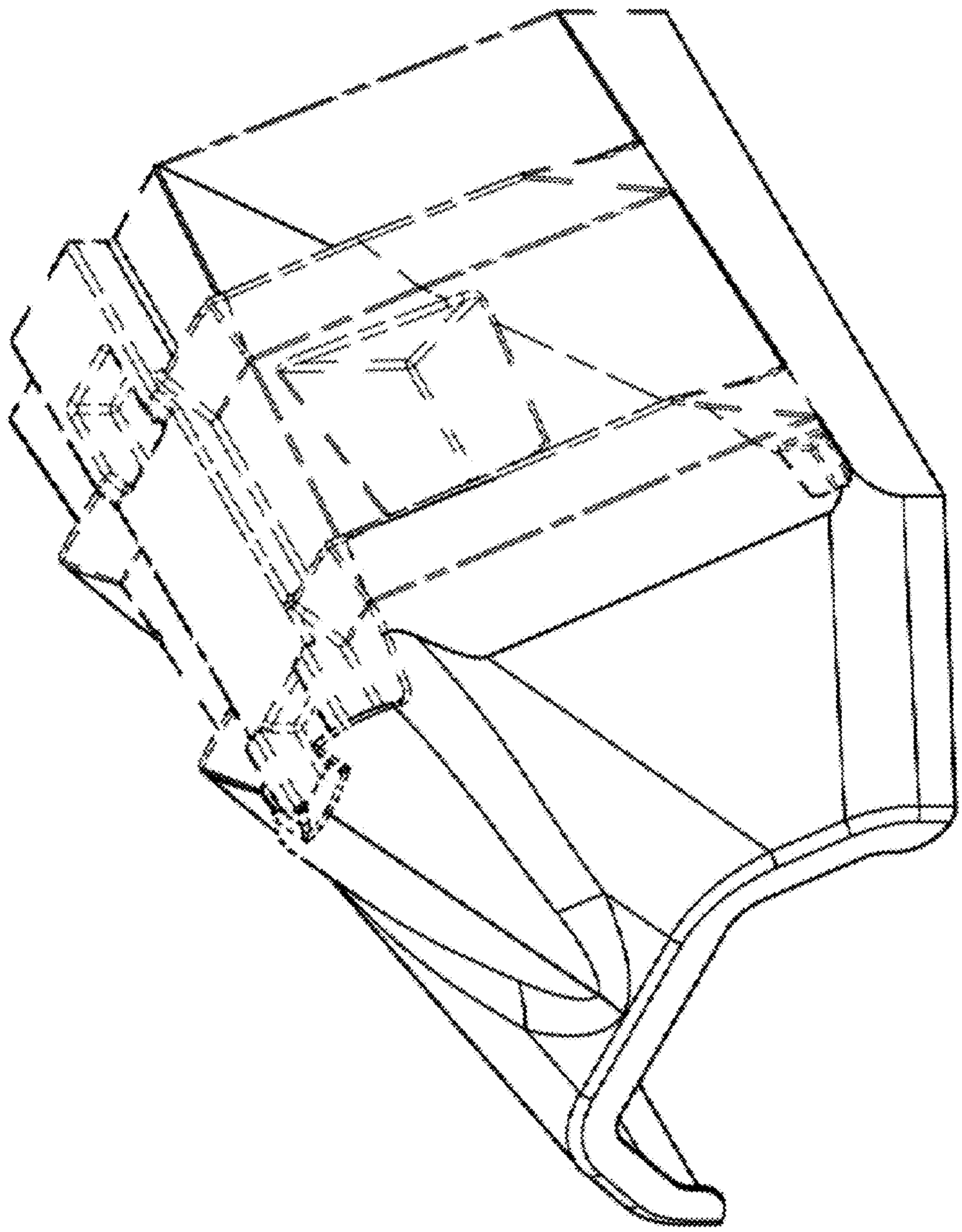

Fig. 1

Fig. 2

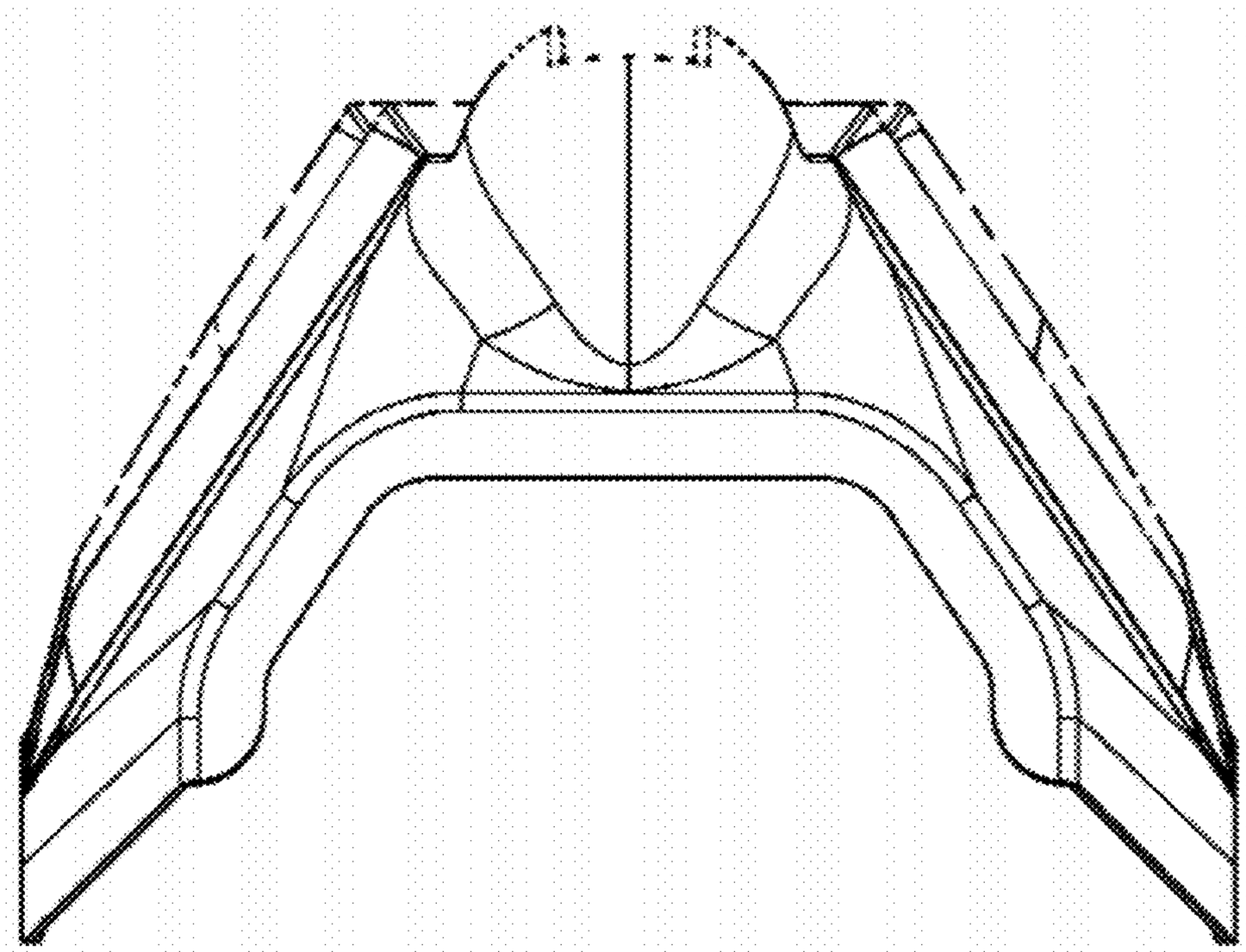

Fig. 3

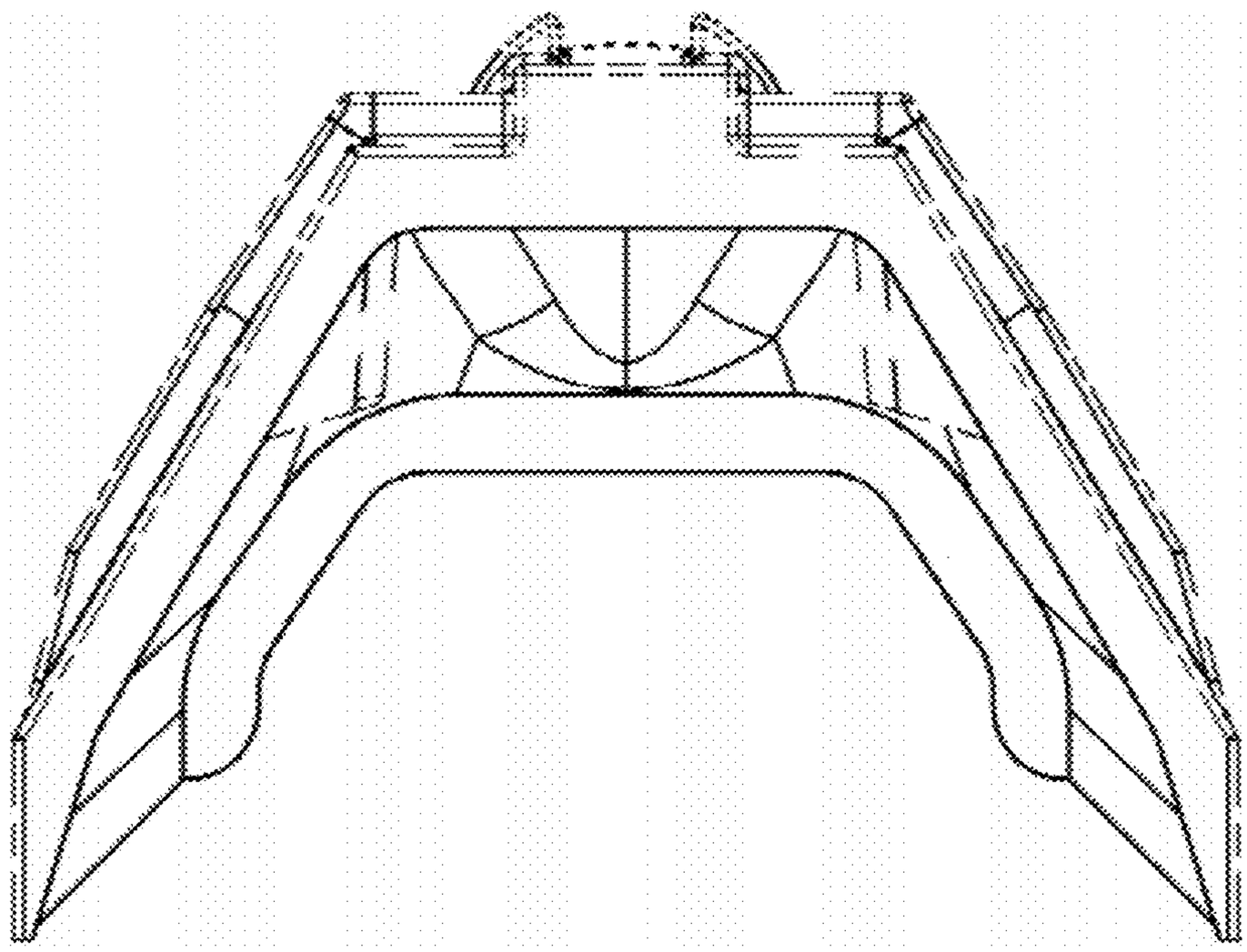

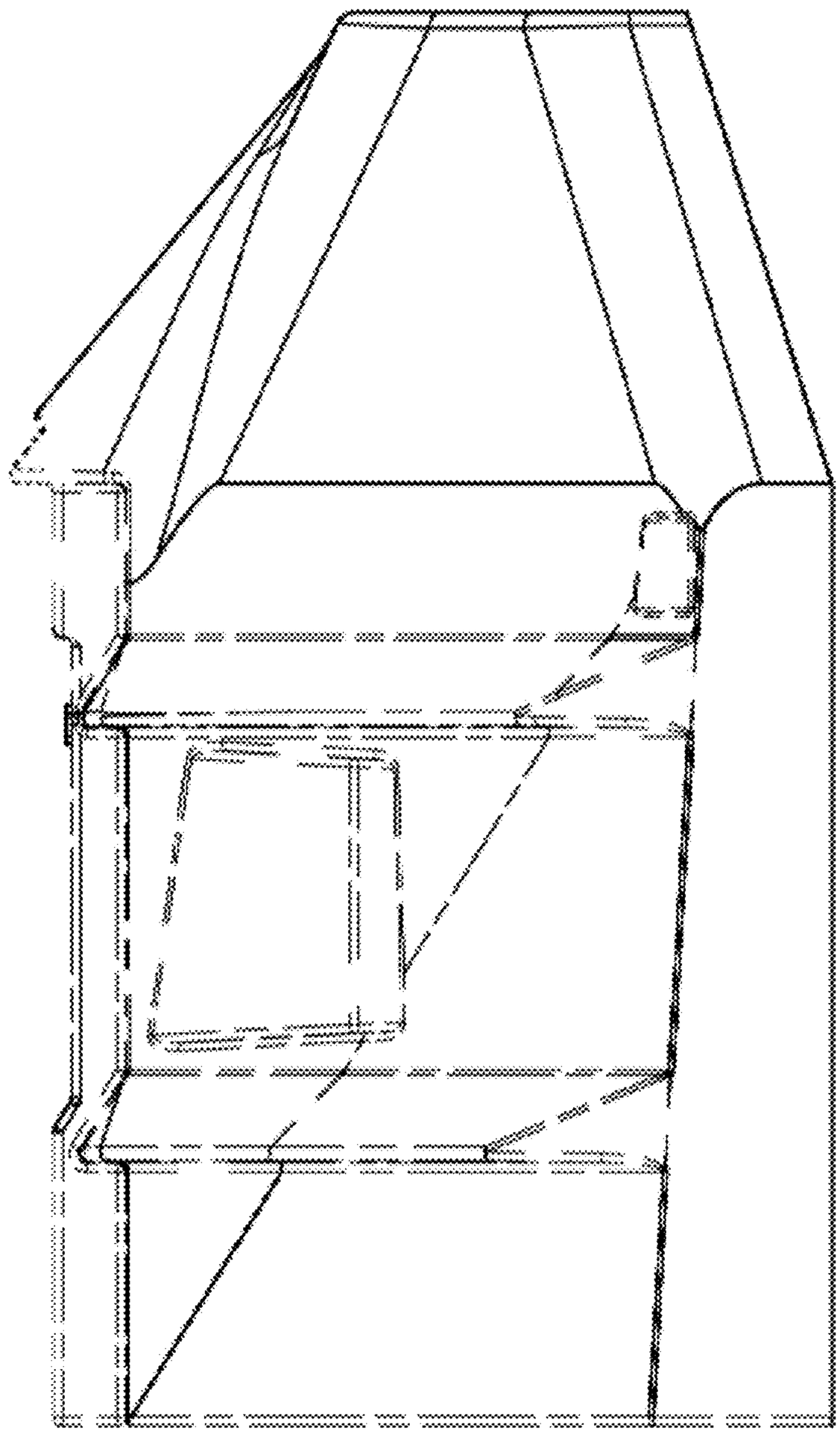

Fig. 4

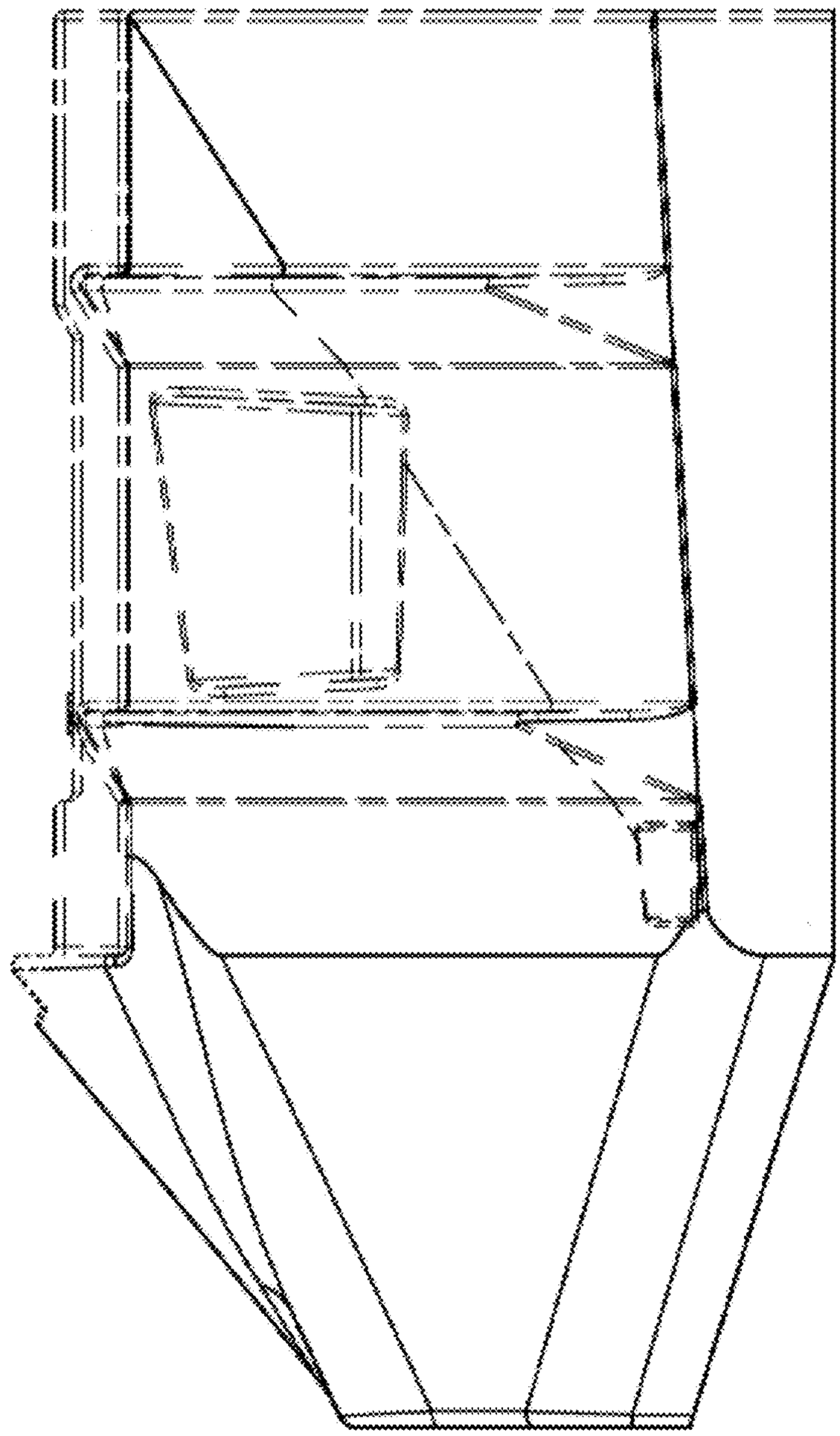

Fig. 5

Fig. 6

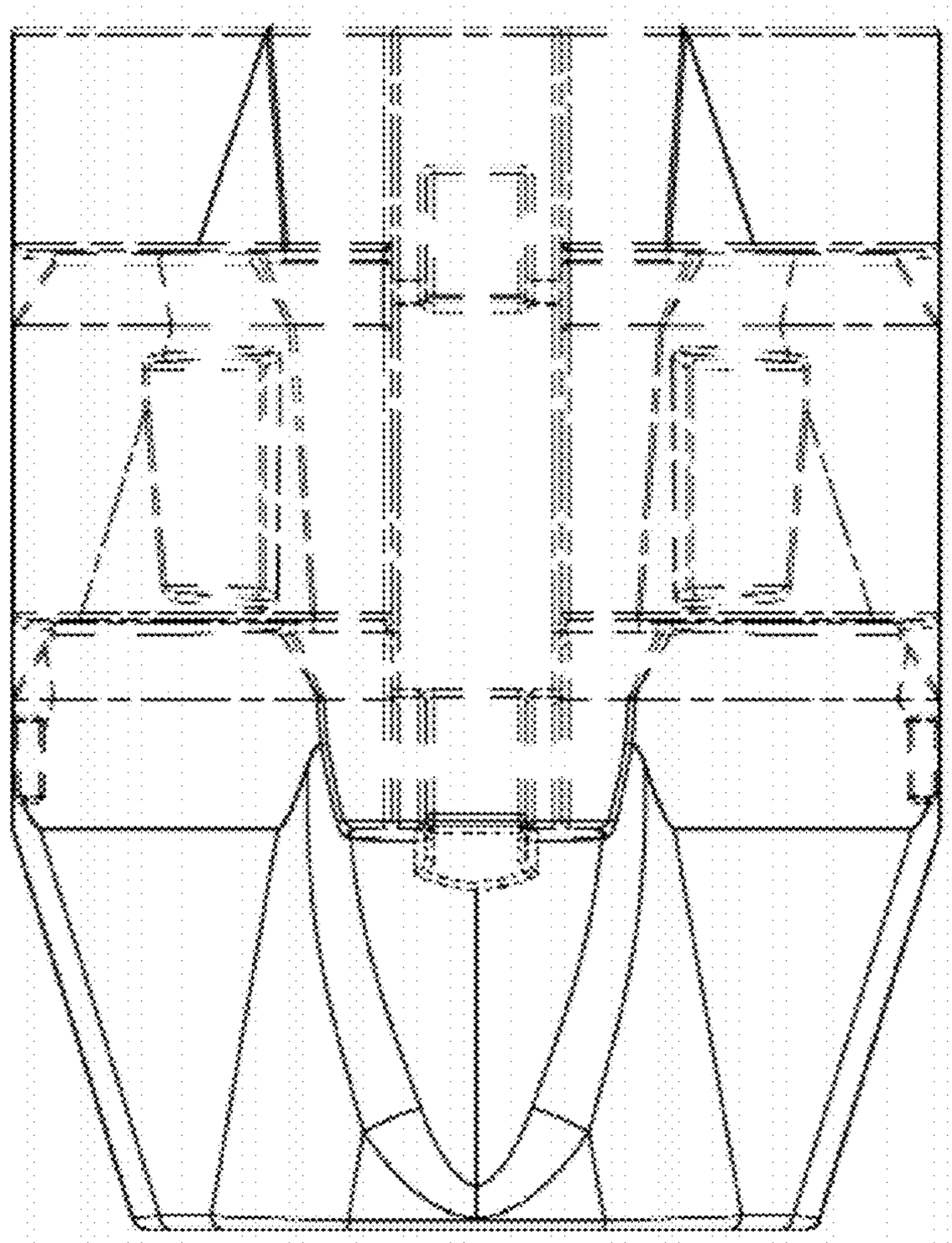
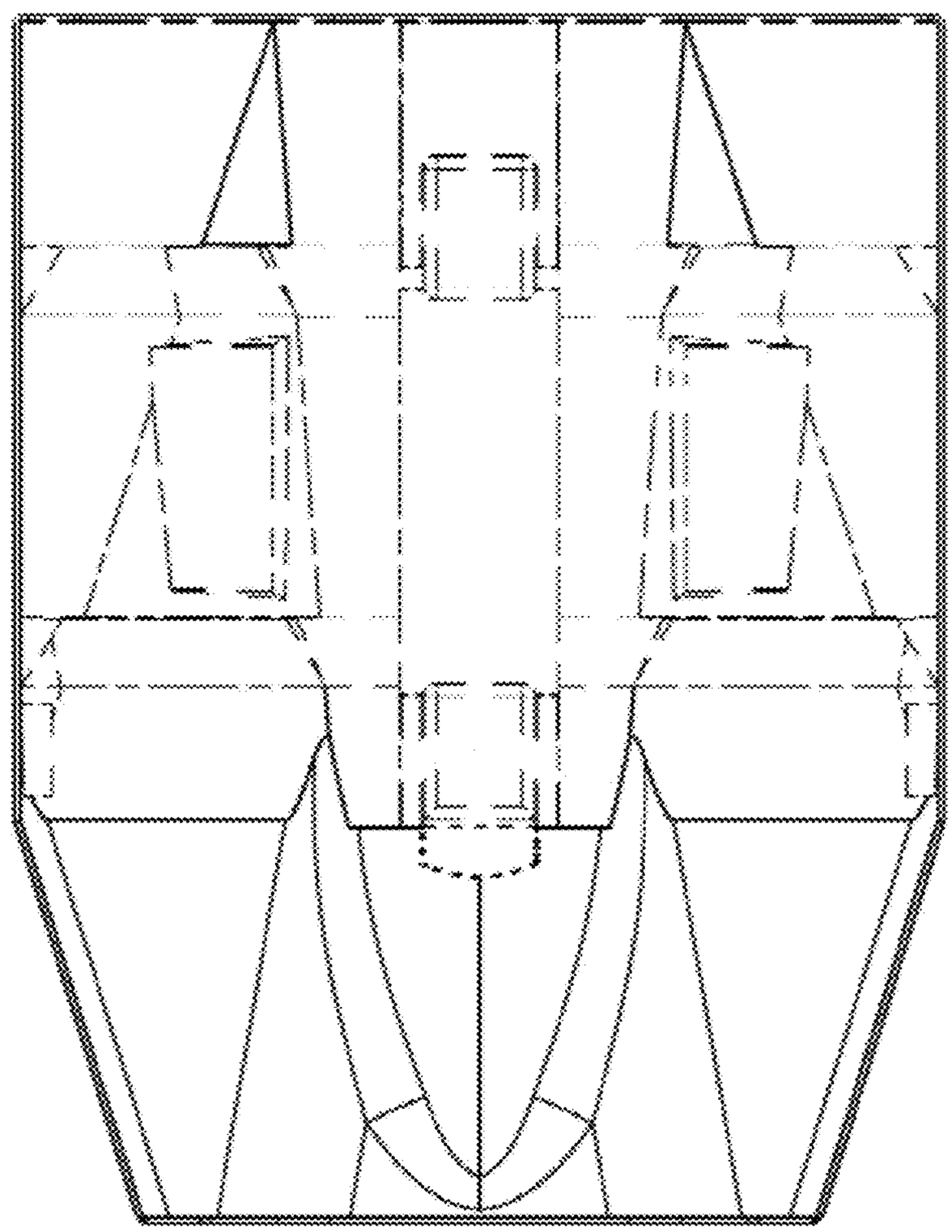
Fig. 7