US00D669942S

(12) United States Design Patent

Mimlitch, III et al.

(10) Patent No.: US D669,942 S
(45) Date of Patent: ** Oct. 30, 2012

(54) **ROBOT ATTACHMENT**

(75) Inventors: **Robert H. Mimlitch, III**, Rowlett, TX (US); **David A. Norman**, Greenville, TX (US); **Douglas Galletti**, Allen, TX (US); **Joel Carter**, Argyle, TX (US); **Gregory Needel**, Rockwall, TX (US); **Jeffrey Russell Waegelin**, Rockwall, TX (US)

(73) Assignee: **Innovation First, Inc.**, Greenville, TX (US)

(**) Term: **14 Years**

(21) Appl. No.: **29/400,209**

(22) Filed: **Aug. 24, 2011**

(51) **LOC (9) Cl.** **21-01**

(52) **U.S. Cl.** **D21/578**; D21/650

(58) **Field of Classification Search** D6/596; D11/158; D30/160; D21/576, 578–585, D21/650, 658–659; 446/72, 97–98, 268–269, 446/356, 369, 377

See application file for complete search history.

(56) **References Cited**

U.S. PATENT DOCUMENTS

1,763,788 A 6/1930 Jobe, Sr.

(Continued)

FOREIGN PATENT DOCUMENTS

DE 1120958 10/1957

(Continued)

OTHER PUBLICATIONS

Shantou GoldRosita Intelligent Electronic Toys Industrial Co., Lit., Scoot Micro-Robotic Vehicles, pictures of product, product available over the Internet; manufactured in Guangdong, China.

Primary Examiner — Sandra Morris

(74) *Attorney, Agent, or Firm* — Adam K. Sacharoff

(57) **CLAIM**

The ornamental design for a robot attachment, as shown and described.

DESCRIPTION

FIG. **1** is a top perspective view showing a first embodiment of the robot attachment;
FIG. **2** is a bottom perspective view of FIG. **1**;
FIG. **3** is a front side view of FIG. **1**;
FIG. **4** is a back side view of FIG. **1**;
FIG. **5** is a top side view of FIG. **1**;
FIG. **6** is a bottom side view of FIG. **1**;
FIG. **7** is a left side view of FIG. **1**;
FIG. **8** is a right side view of FIG. **1**;
FIG. **9** is a top perspective view showing a second embodiment of the robot attachment with a toy robot in dotted lines;
FIG. **10** is a bottom perspective view of FIG. **9**;
FIG. **11** is a front side view of FIG. **9**;
FIG. **12** is a back side view of FIG. **9**;
FIG. **13** is a top side view of FIG. **9**;
FIG. **14** is a bottom side view of FIG. **9**;
FIG. **15** is a left side view of FIG. **9**; and,
FIG. **16** is a right side view of FIG. **9**.
The broken lines are for the purpose of illustrating portions of the environmental structure and forms no part of the claimed embodiment and design.

1 Claim, 16 Drawing Sheets

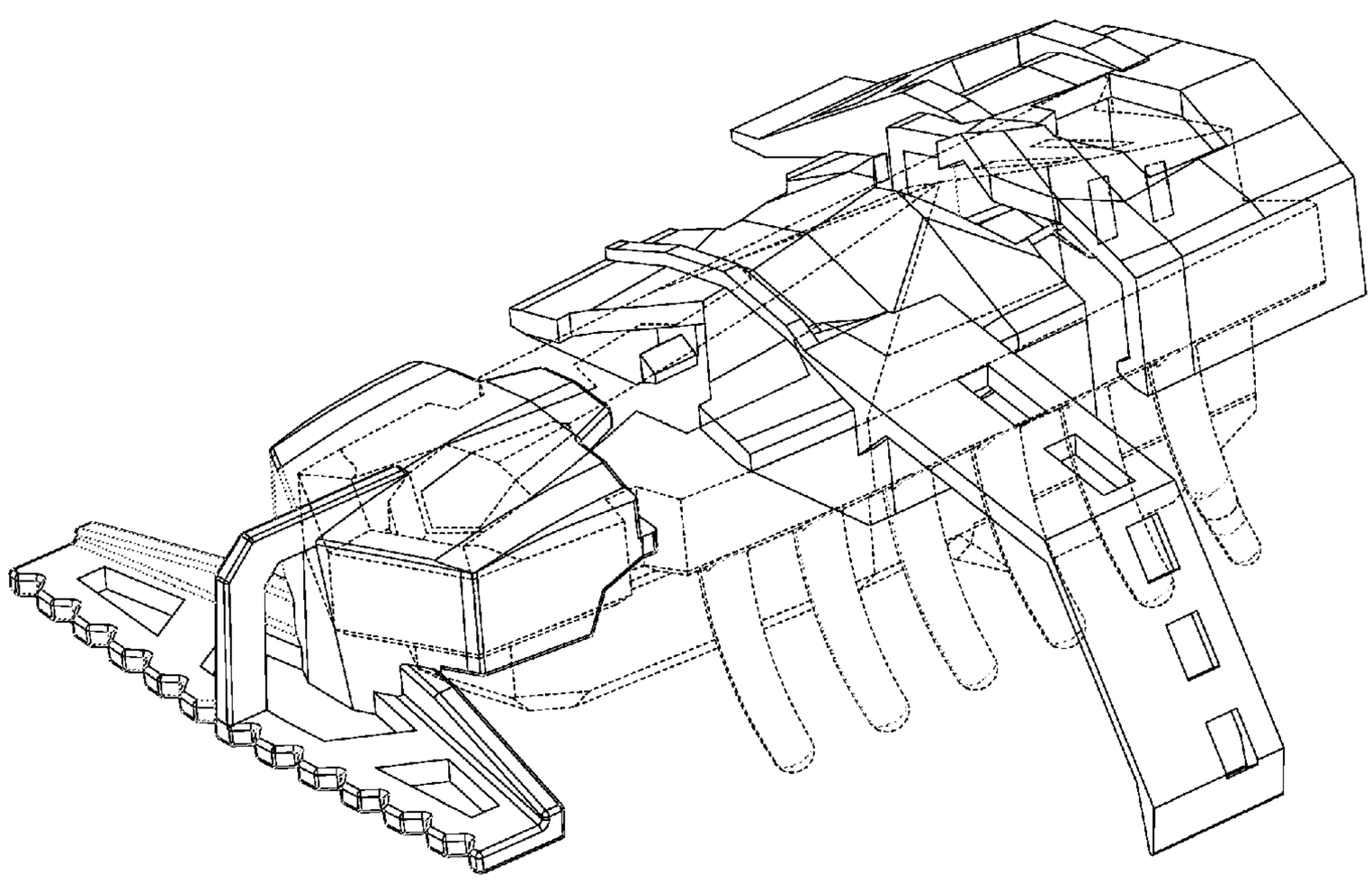

U.S. PATENT DOCUMENTS

1,793,121	A	2/1931	Muller
2,167,985	A	8/1939	Levay
2,618,888	A	11/1952	Hoff
2,827,735	A	3/1959	Grimm
3,196,580	A	7/1965	Rakestraw
3,331,463	A	7/1967	Kramer
3,530,617	A	9/1970	Halvorson et al.
3,841,636	A	10/1974	Meyer
3,842,532	A	10/1974	Nielsen
3,959,920	A	6/1976	Ieda
4,163,558	A	8/1979	Breslow et al.
4,219,957	A	9/1980	Kakuta
4,291,490	A	9/1981	Ikeda
4,591,346	A	5/1986	Ikeda
D289,070	S	3/1987	Forbes et al.
D289,747	S	5/1987	Sethares et al.
D291,711	S	9/1987	Dixon
4,708,690	A	11/1987	Kulesza et al.
4,941,857	A	7/1990	Fujimaki
5,088,949	A	2/1992	Atkinson et al.
5,221,226	A	6/1993	Park
D405,850	S	2/1999	Witkin
5,993,286	A	11/1999	Tacquard et al.
D421,932	S	3/2000	Hawkins et al.
D427,256	S	6/2000	Teigiser
6,238,264	B1	5/2001	Kazami et al.
D456,467	S	4/2002	Corbett
6,435,929	B1	8/2002	Halford
6,599,048	B2	7/2003	Kuo
6,652,352	B1	11/2003	MacArthur et al.
6,681,150	B1	1/2004	Haga et al.
6,826,449	B1	11/2004	Abu-Taha
6,866,557	B2	3/2005	Randall
6,899,589	B1	5/2005	Lund et al.
6,964,309	B2	11/2005	Quinn et al.
6,964,572	B2	11/2005	Cesa
D517,131	S	3/2006	Carruth
7,040,951	B2	5/2006	Hornsby et al.
7,204,455	B2	4/2007	Sinclair
D555,213	S	11/2007	Bowen et al.
7,803,031	B1	9/2010	Winckler et al.
7,927,170	B2	4/2011	Bickerton et al.
2001/0054518	A1	12/2001	Buehler et al.
2004/0198159	A1	10/2004	Xu et al.
2005/0112992	A1	5/2005	Malcolm
2007/0087654	A1	4/2007	Chernick et al.
2009/0311941	A1	12/2009	Bickerton et al.

FOREIGN PATENT DOCUMENTS

FR	1564711	3/1969
FR	2358174	2/1978
GB	488042	6/1938
GB	1180384	2/1970
GB	1381326	1/1975
JP	H1-146570	6/1989
JP	6343767	12/1994
WO	2006136792	12/2006

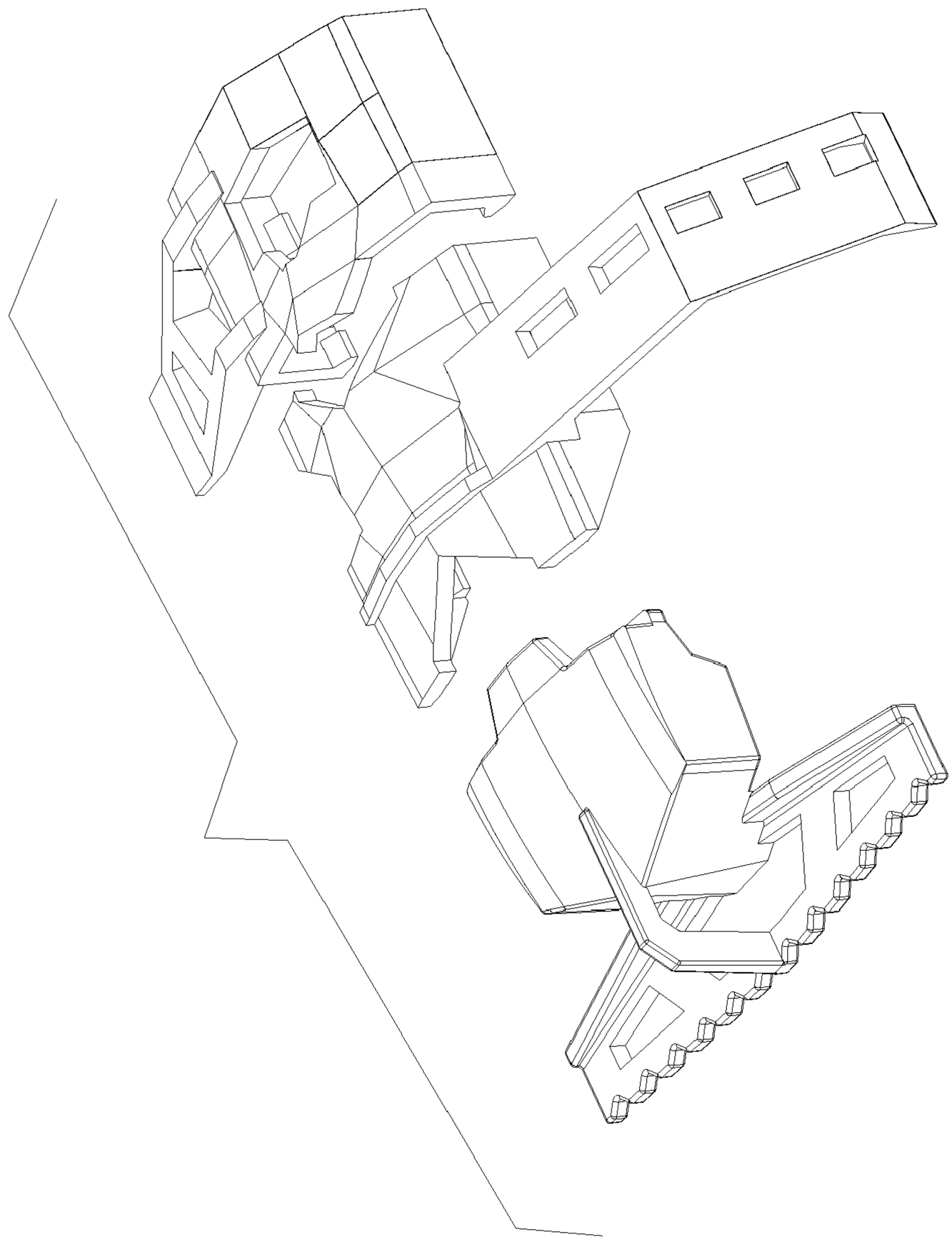

FIGURE 1

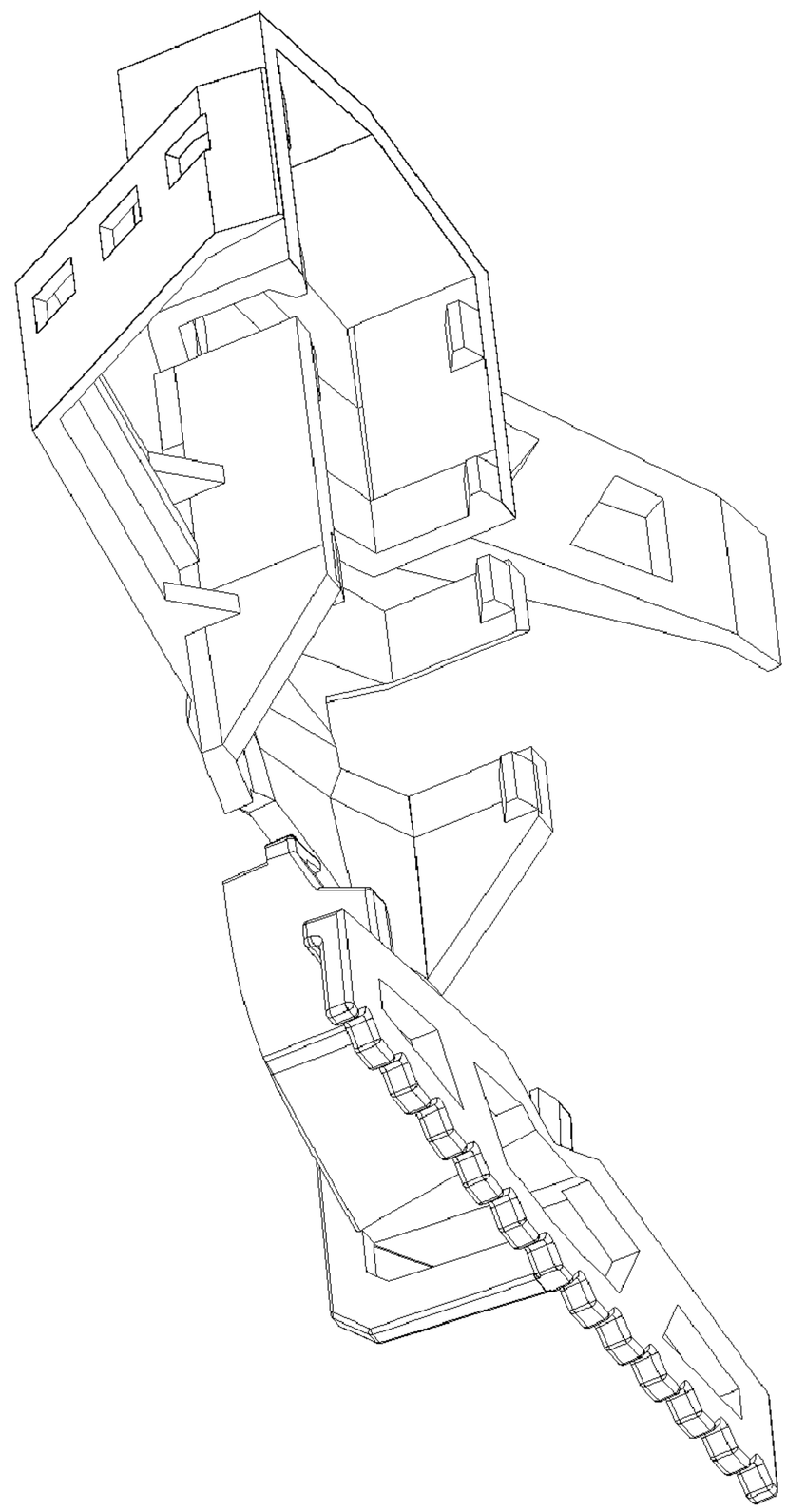

FIGURE 2

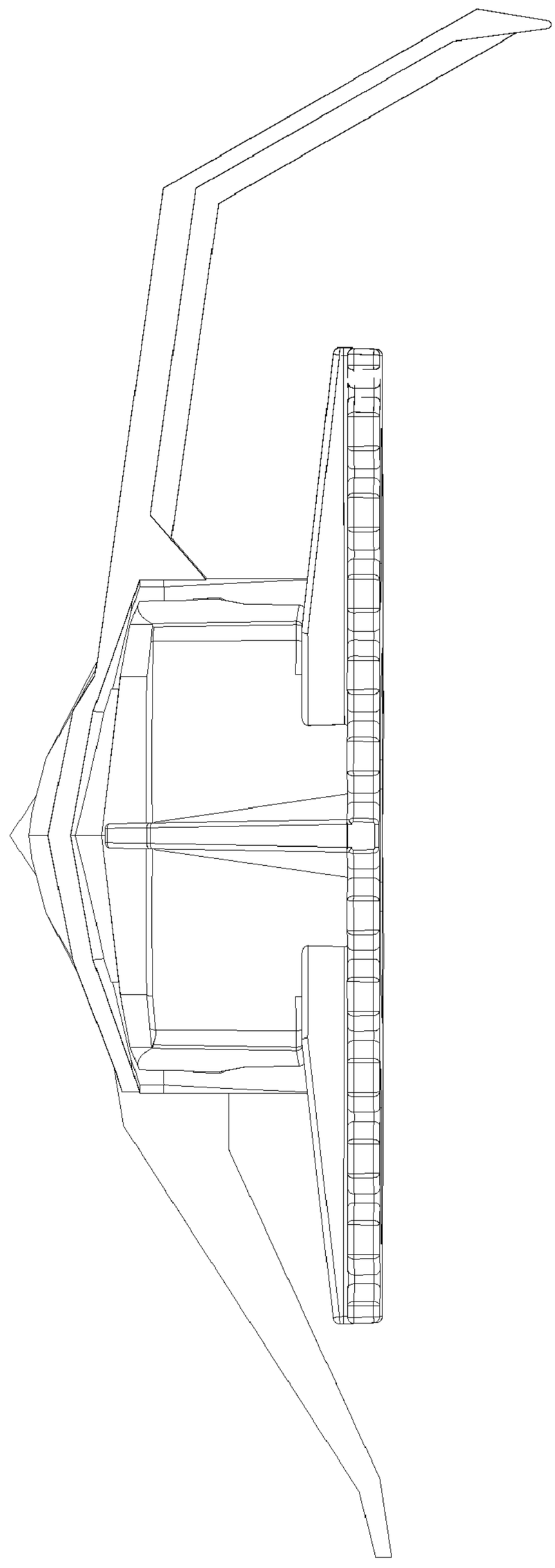

FIGURE 3

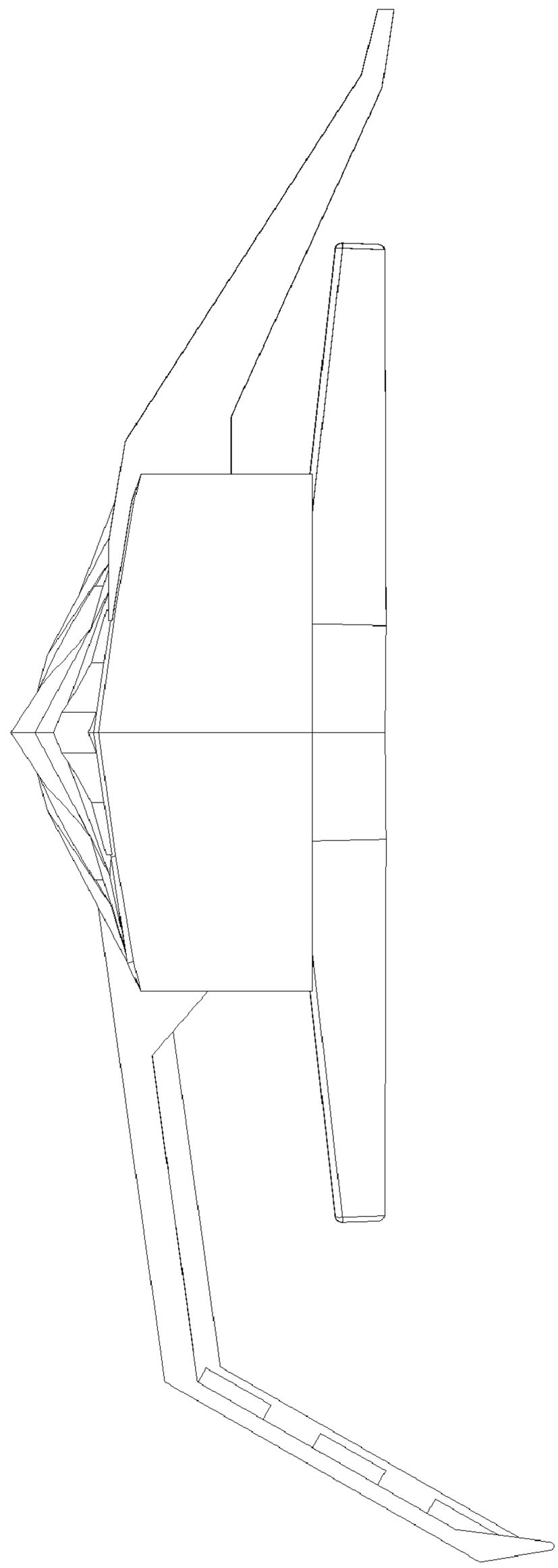

FIGURE 4

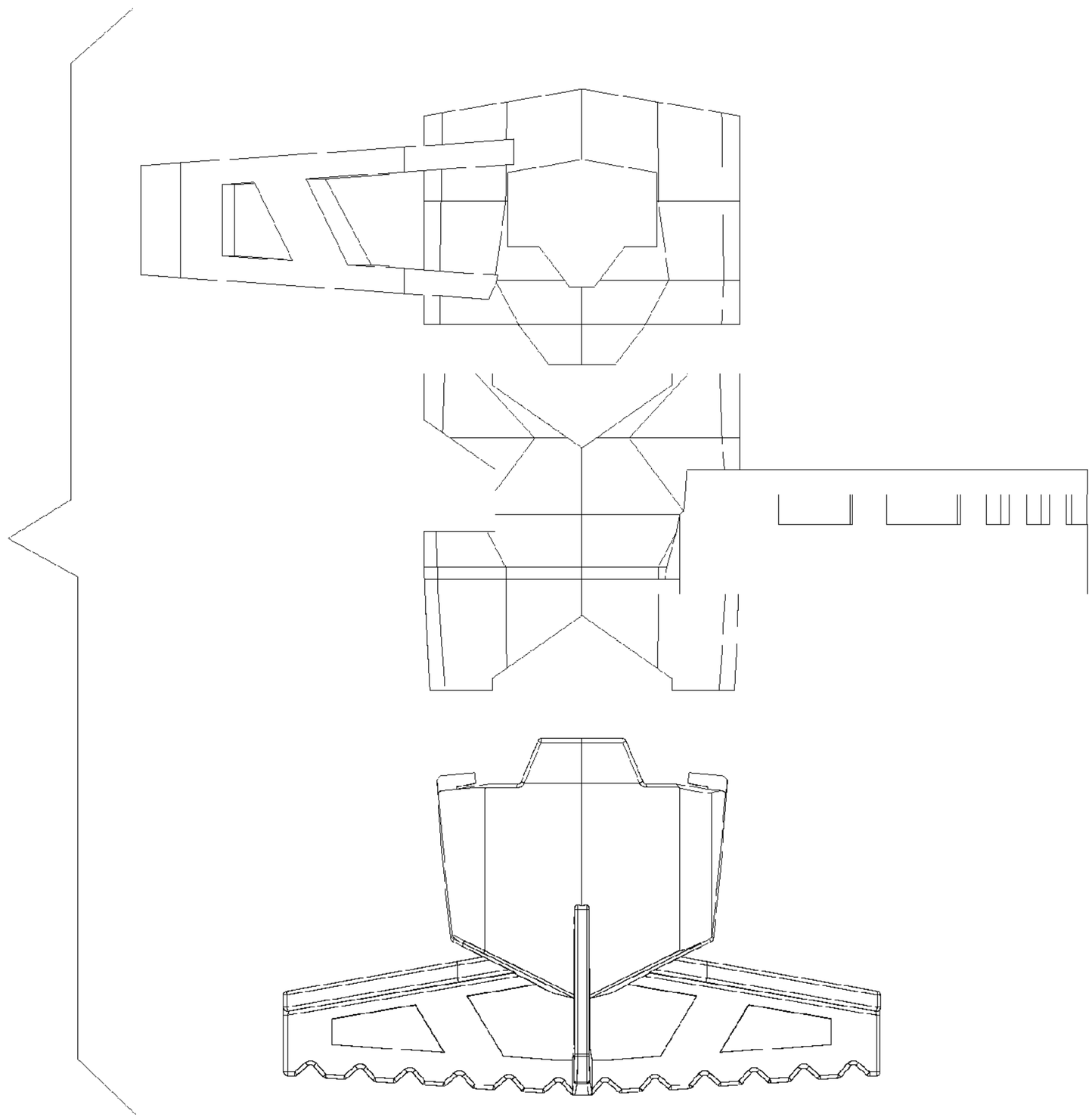

FIGURE 5

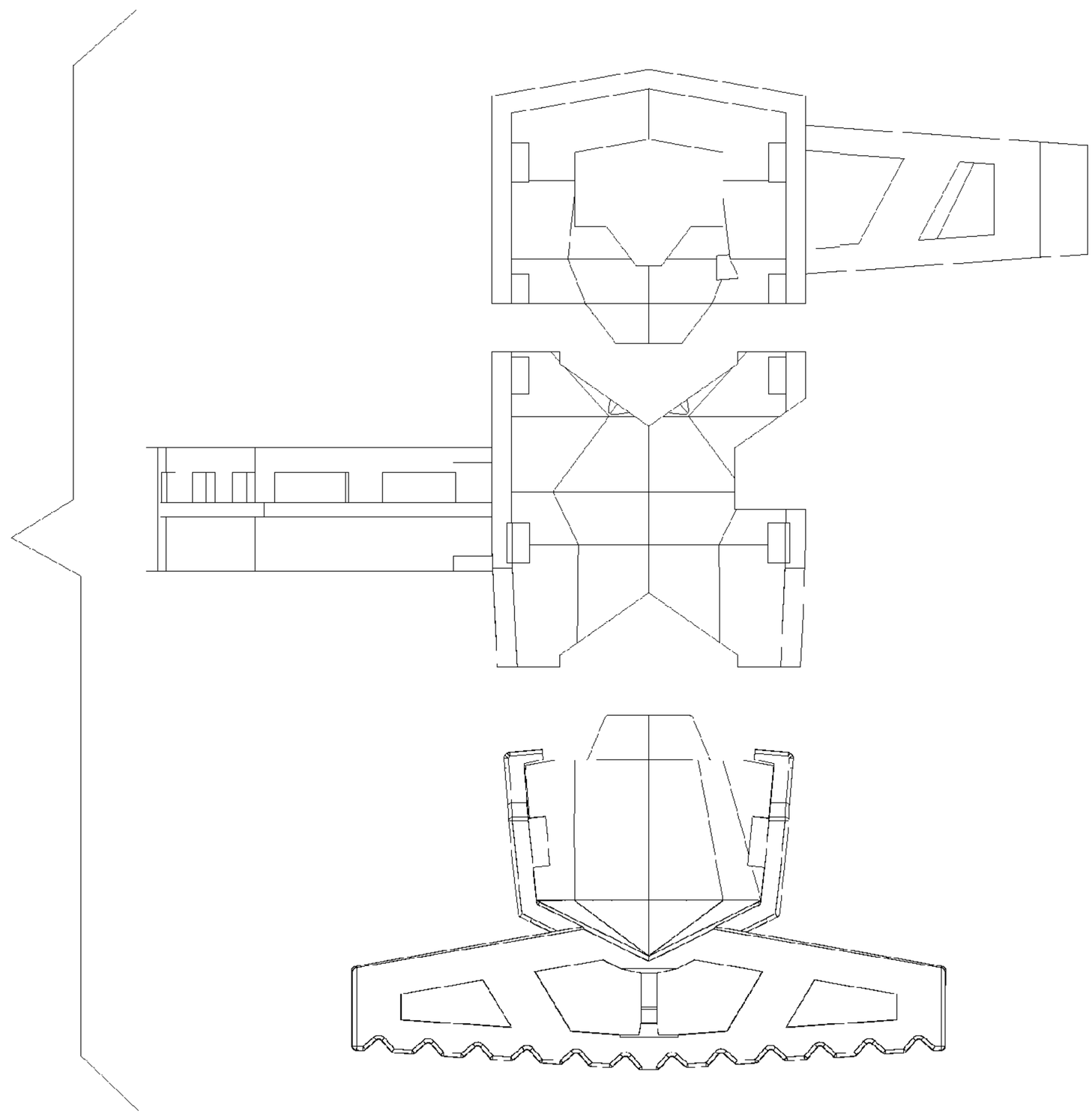

FIGURE 6

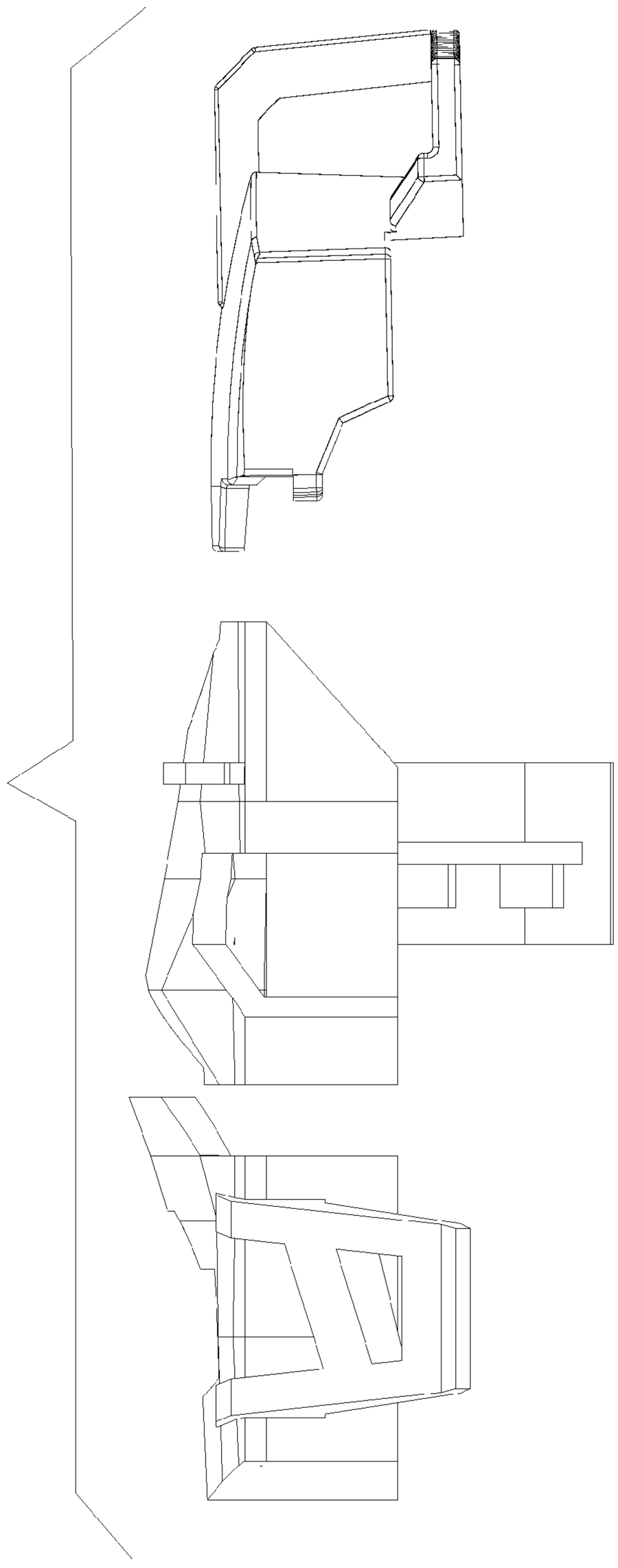

FIGURE 7

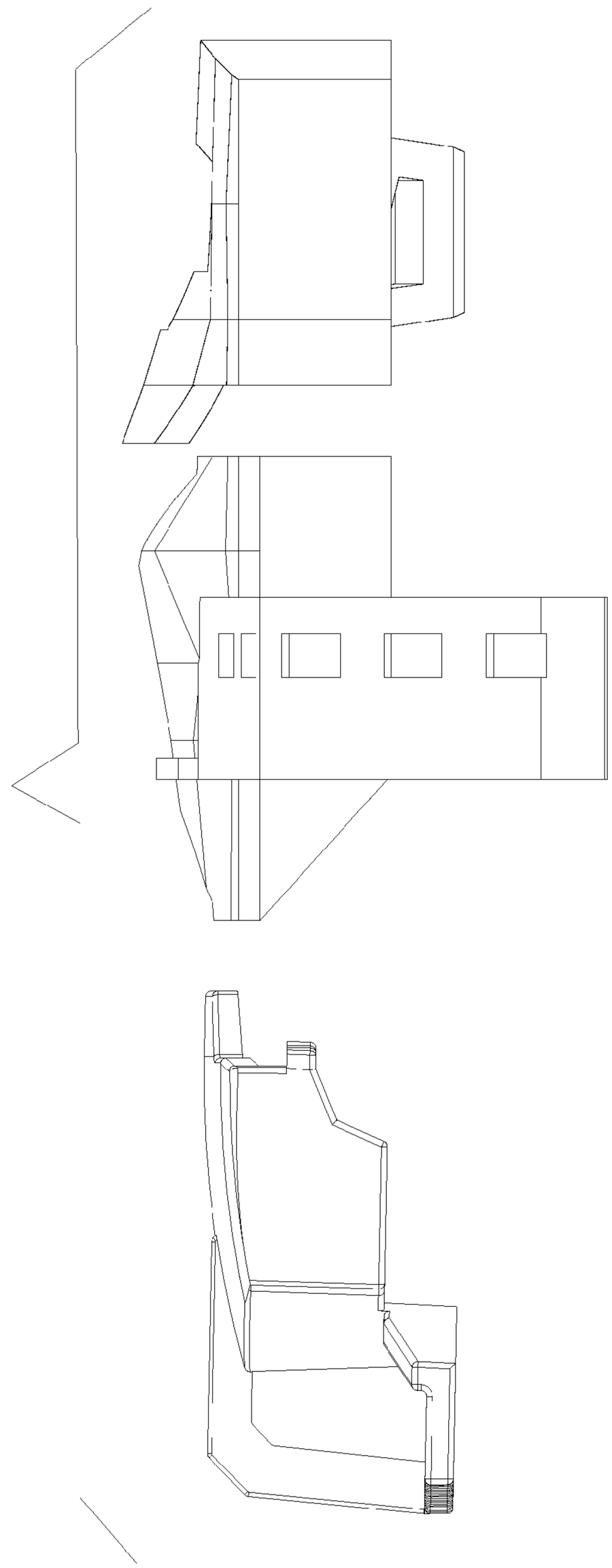

FIGURE 8

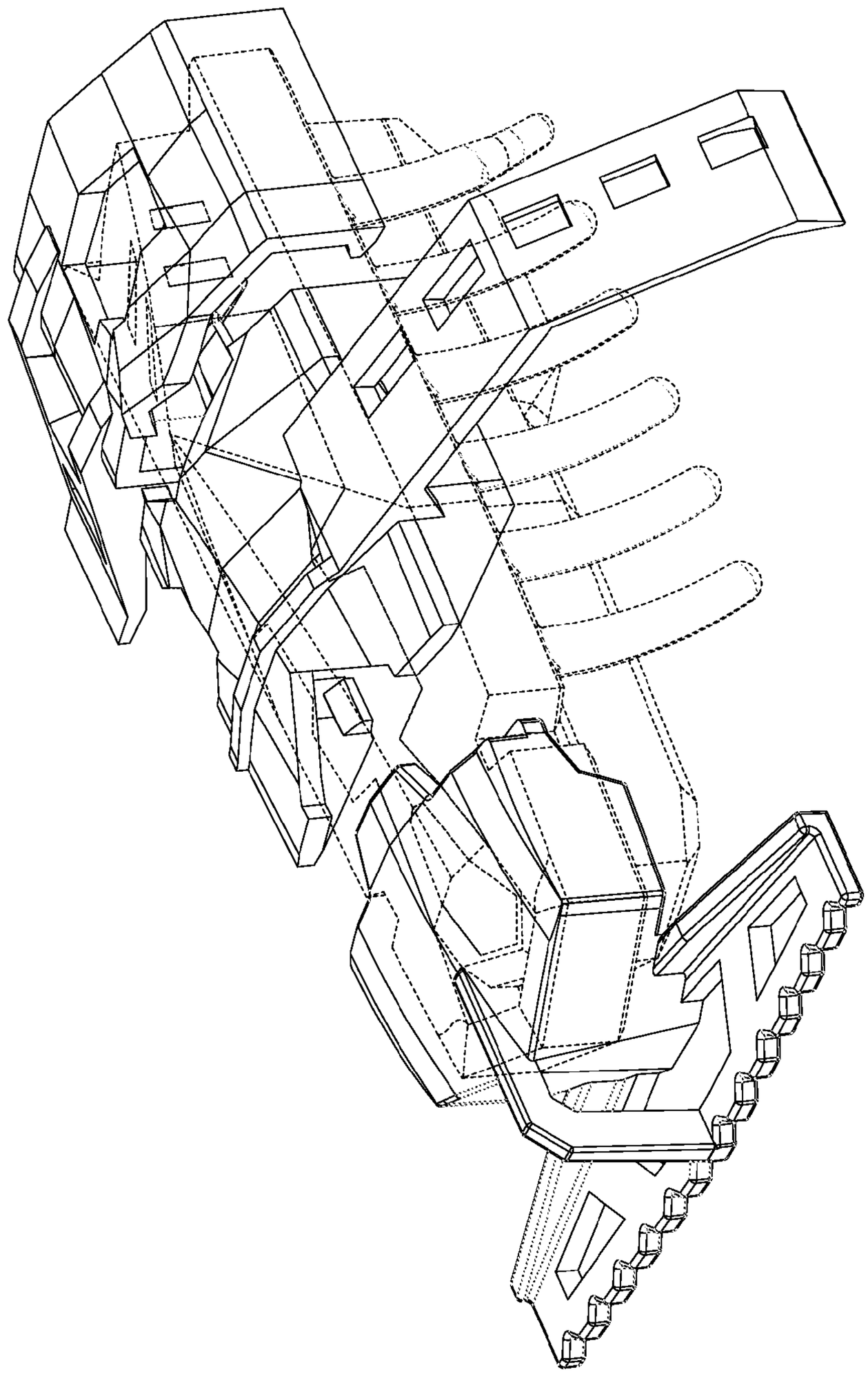

FIGURE 9

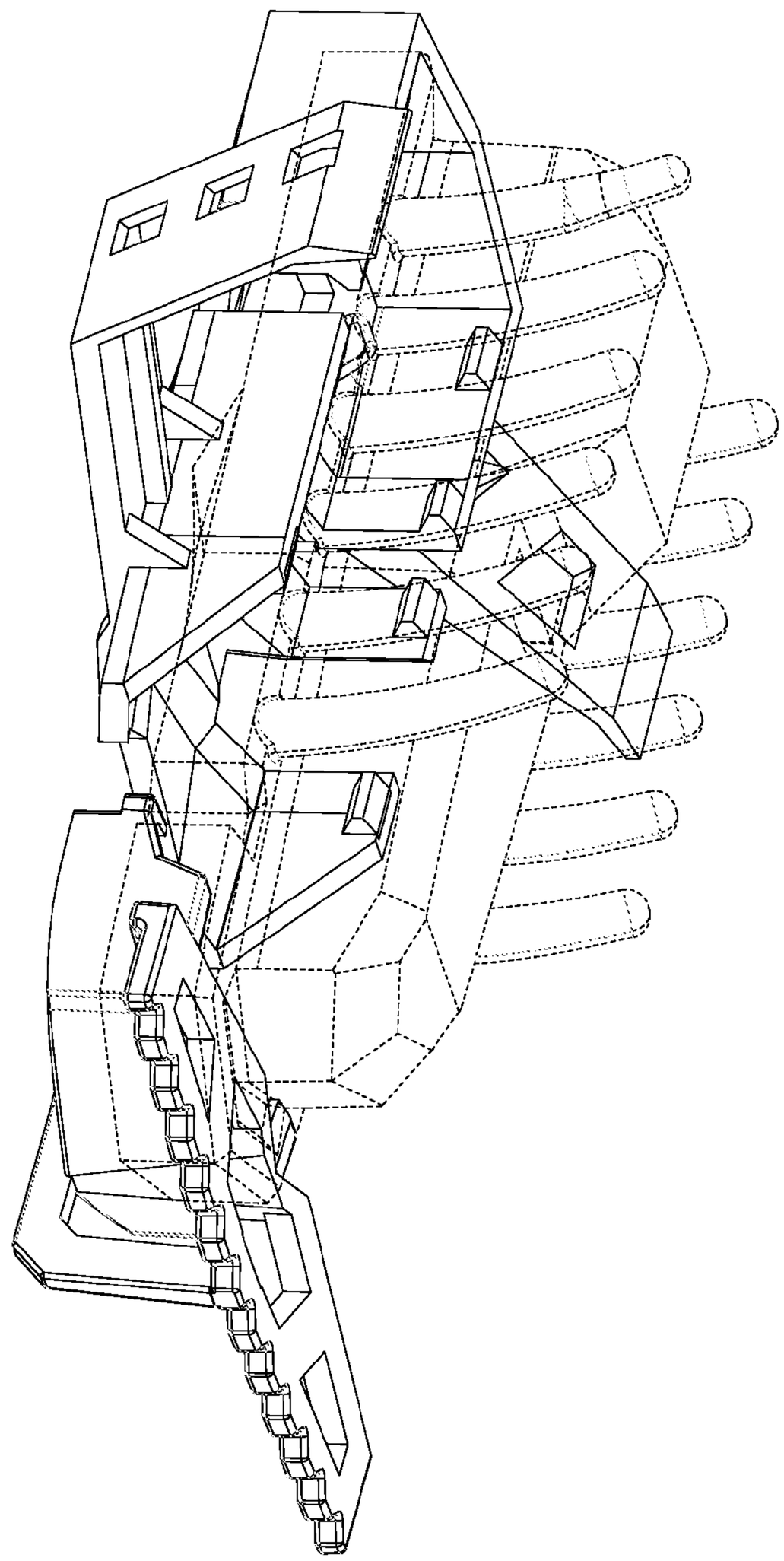

FIGURE 10

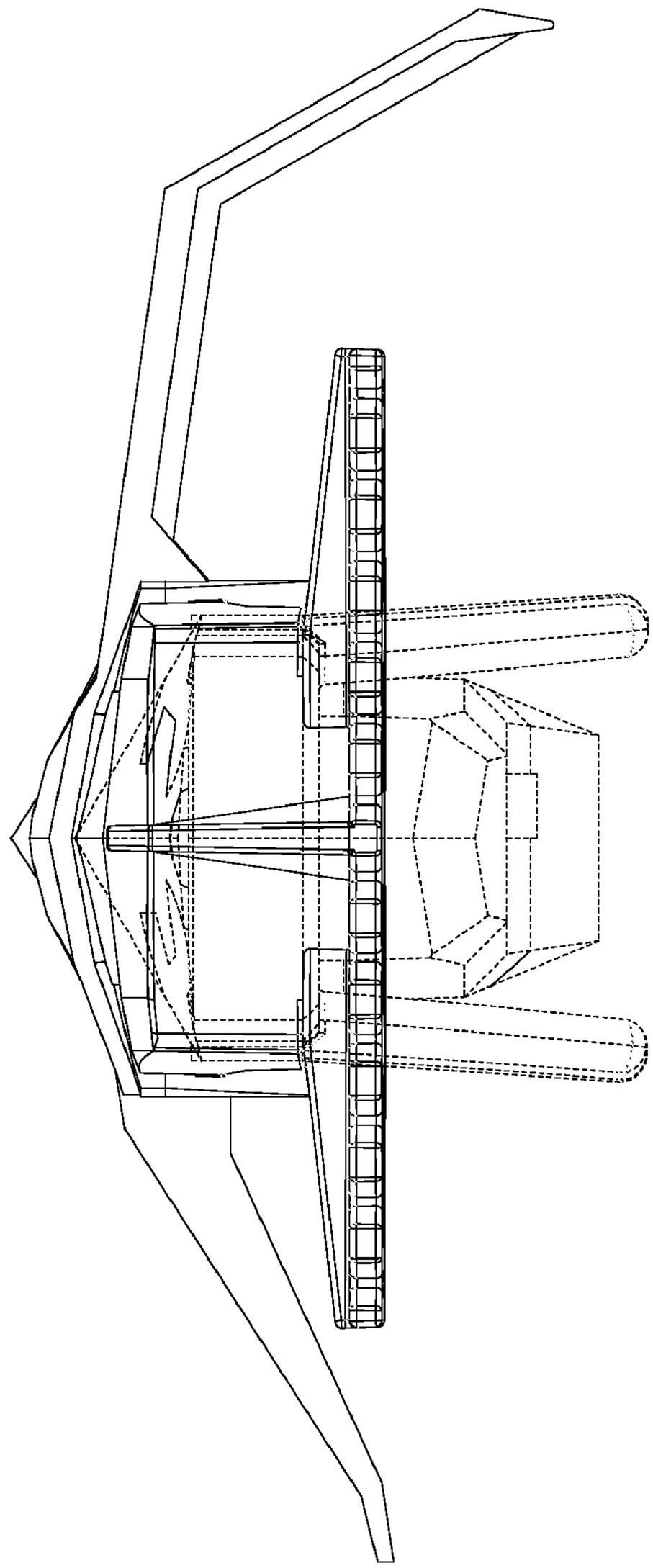

FIGURE 11

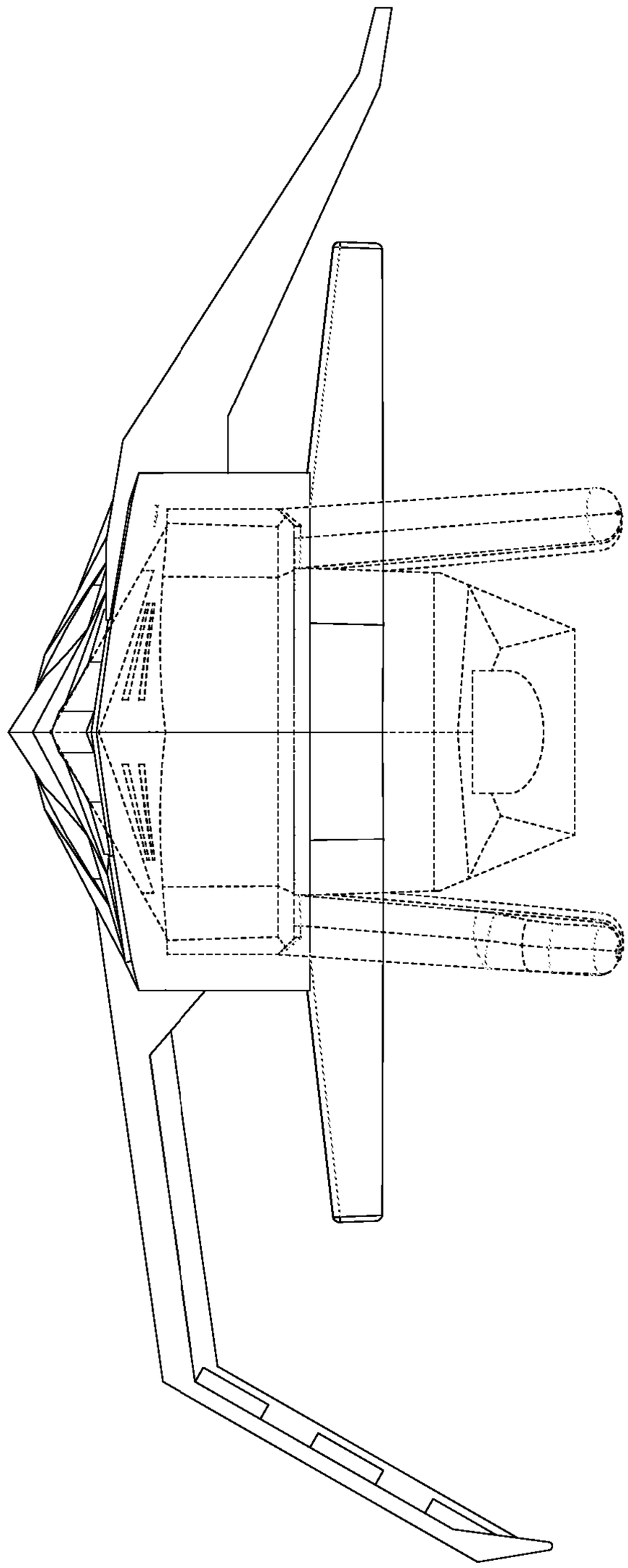

FIGURE 12

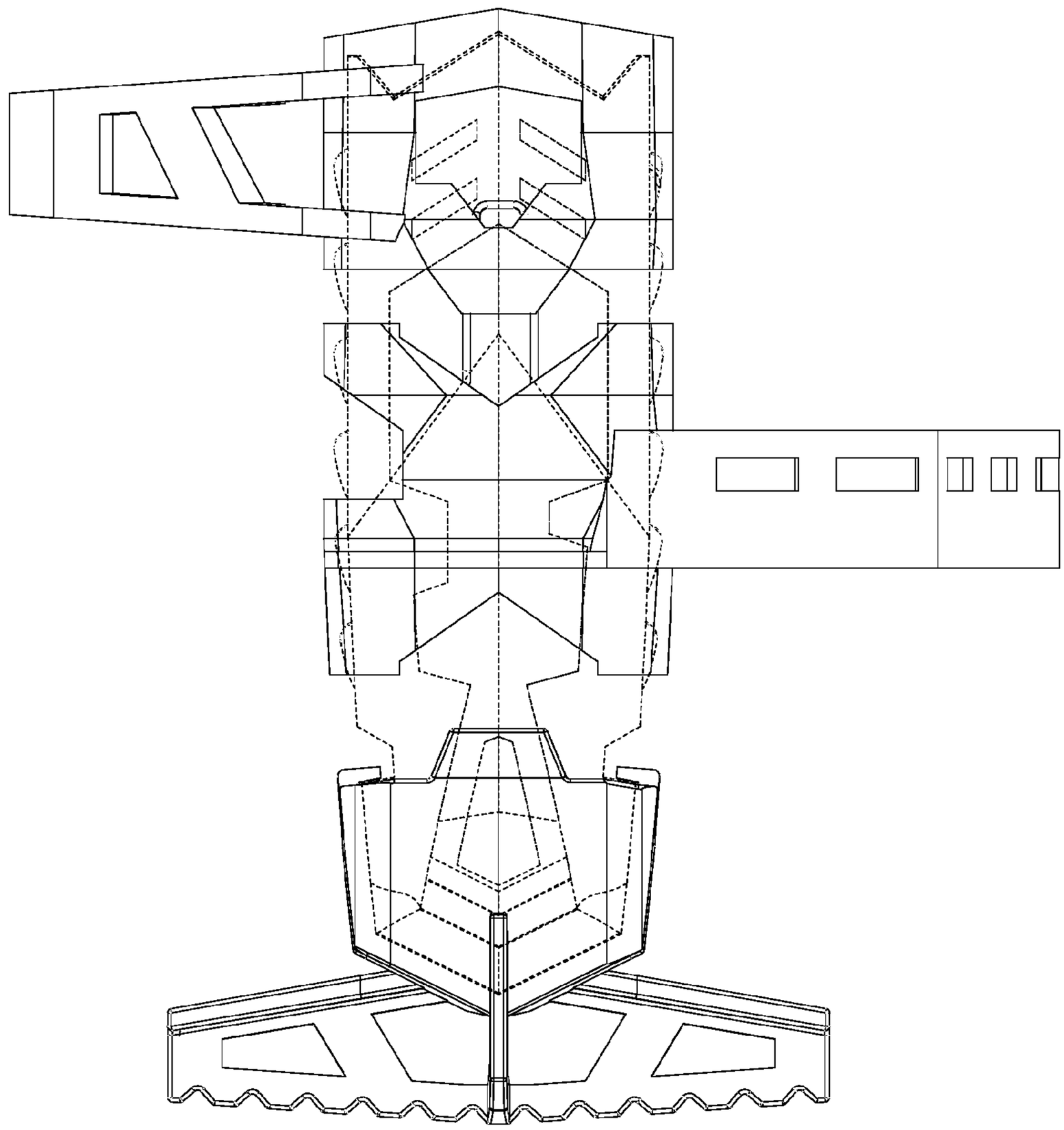

FIGURE 13

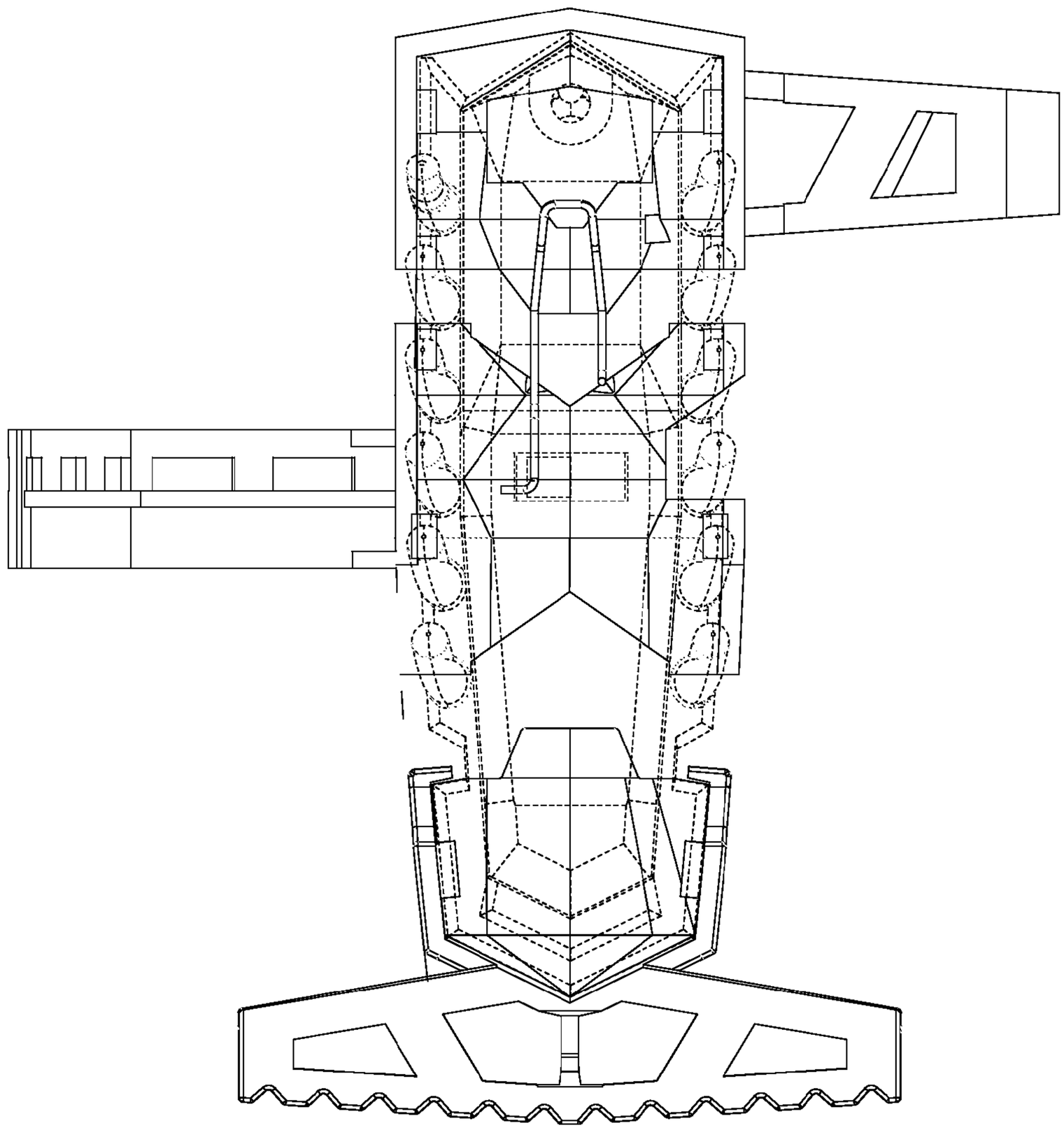

FIGURE 14

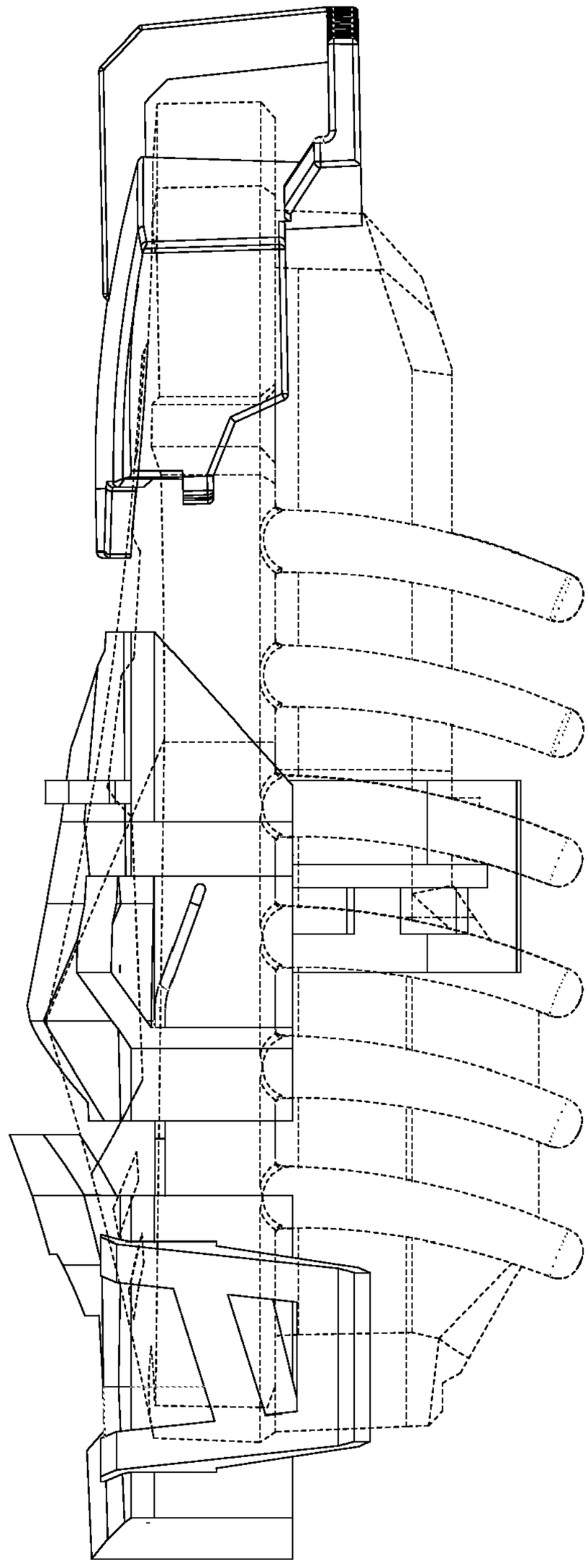

FIGURE 15

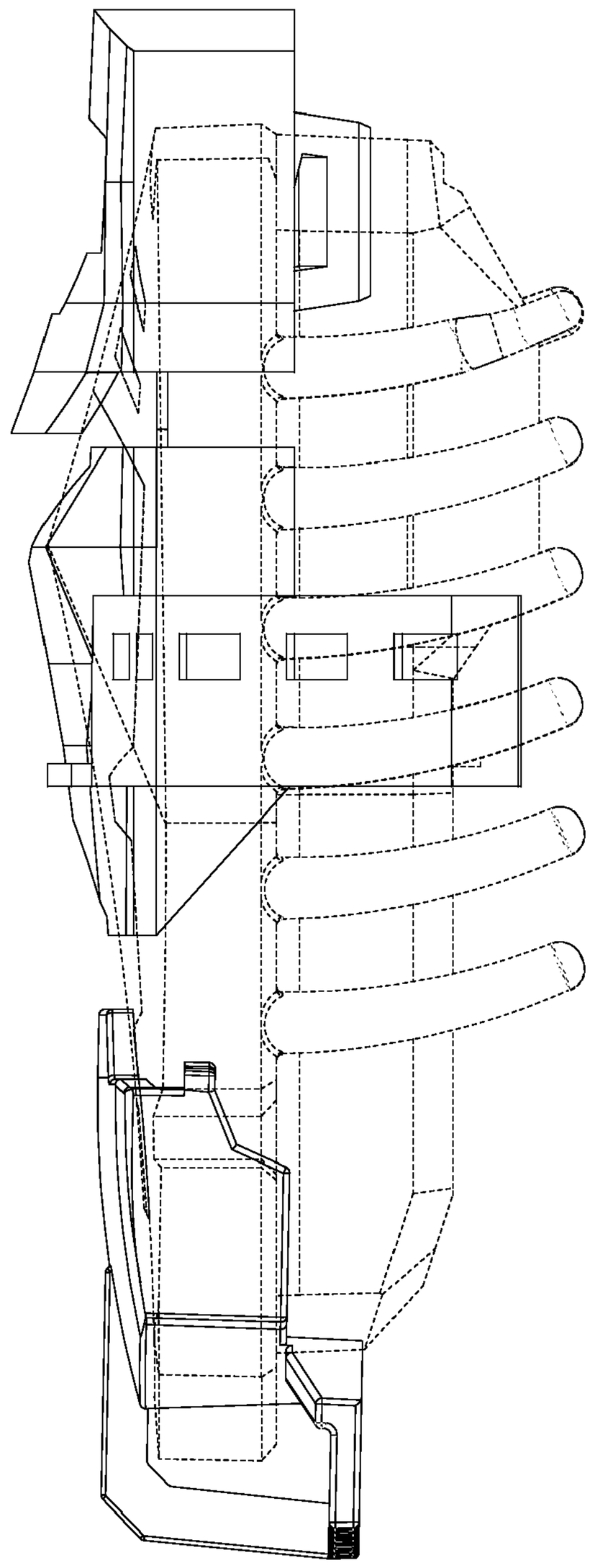

FIGURE 16