US00D667676S

(12) United States Design Patent
Cahen

(10) Patent No.: US D667,676 S
(45) Date of Patent: ** Sep. 25, 2012

(54) **COFFEE MACHINE**

(75) Inventor: **Antoine Cahen**, Lausanne (CH)

(73) Assignee: **Societe des Produits Nestle S.A.**, Vevey (CH)

(**) Term: **14 Years**

(21) Appl. No.: **29/398,607**

(22) Filed: **Aug. 2, 2011**

(51) **LOC (9) Cl.** **07-01**
(52) **U.S. Cl.** **D7/309**; D7/311; D7/307
(58) **Field of Classification Search** D7/300, D7/306–308, 309–311; 99/295, 300, 302, 99/323.1, 280, 282, 307
See application file for complete search history.

(56) **References Cited**

U.S. PATENT DOCUMENTS

D205,394	S	*	8/1966	Richeson	D7/308
D310,002	S	*	8/1990	Rossio et al.	D7/308
D316,794	S	*	5/1991	Volgger et al.	D7/308
D381,857	S	*	8/1997	Swaim	D7/307
D395,975	S	*	7/1998	Munoz	D7/308
D417,580	S	*	12/1999	Fusi	D7/309
D439,788	S	*	4/2001	Bettini	D7/309
D476,842	S	*	7/2003	Cortese	D7/309
D515,862	S	*	2/2006	Pighetti	D7/309
D550,498	S	*	9/2007	Vicente Seguer	D7/309
D551,487	S	*	9/2007	Beretta	D7/309
D573,393	S	*	7/2008	Trazzi	D7/309
D589,739	S	*	4/2009	Giugiaro	D7/309
D592,003	S	*	5/2009	Giugiaro	D7/309
8,156,858	B2	*	4/2012	Carbonini	99/280

* cited by examiner

Primary Examiner — Marianne Pandozzi
(74) *Attorney, Agent, or Firm* — K&L Gates LLP

(57) **CLAIM**

The ornamental design for a coffee machine, as shown and described.

DESCRIPTION

FIG. **1** illustrates a front perspective view of the coffee machine showing my new design;
FIG. **2** illustrates a front elevation view thereof;
FIG. **3** illustrates a rear elevation view thereof;
FIG. **4** illustrates a left side elevation view thereof;
FIG. **5** illustrates a right side elevation view thereof;
FIG. **6** illustrates a top view thereof; and,
FIG. **7** illustrates a bottom view thereof.

1 Claim, 7 Drawing Sheets

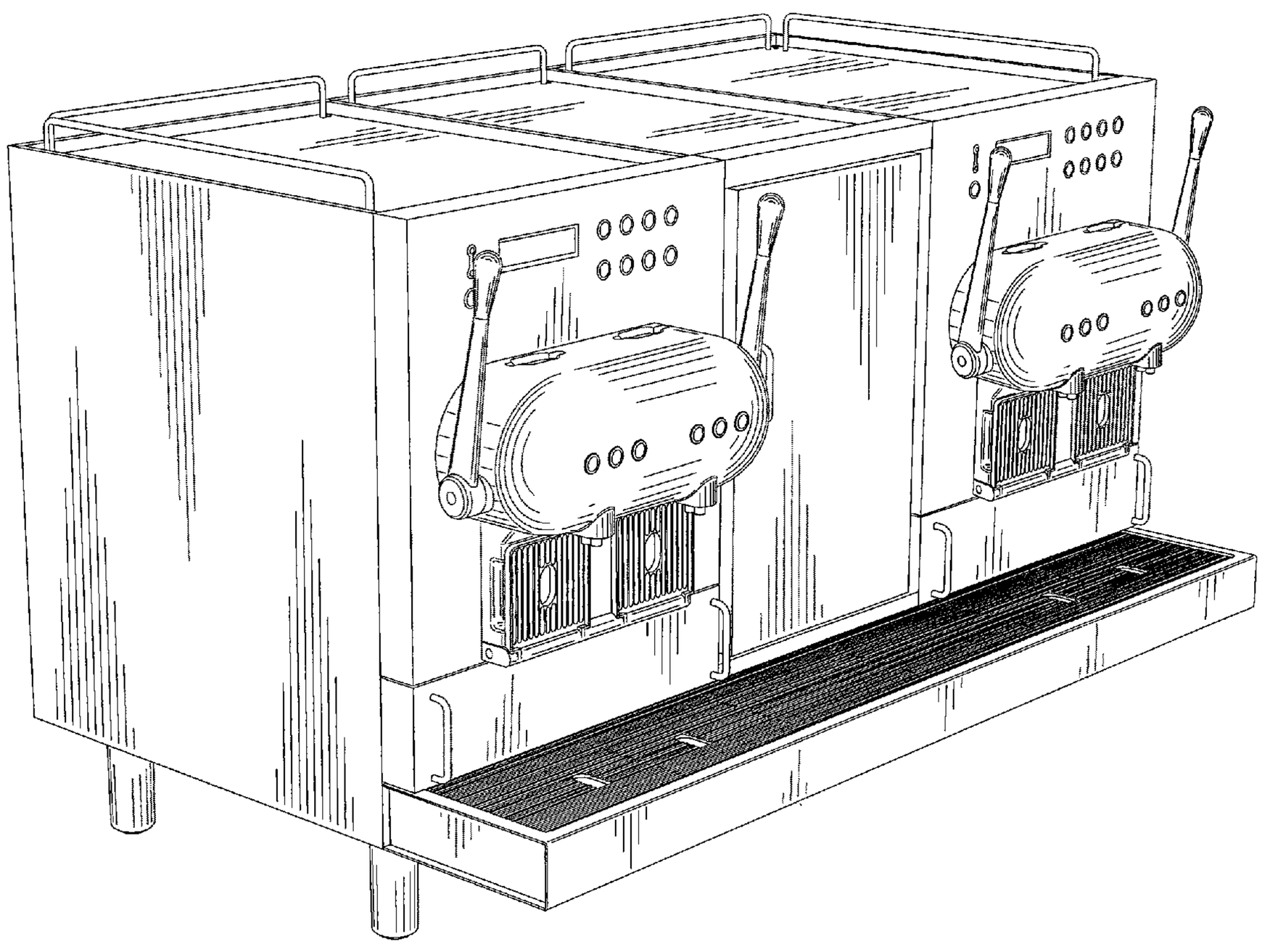

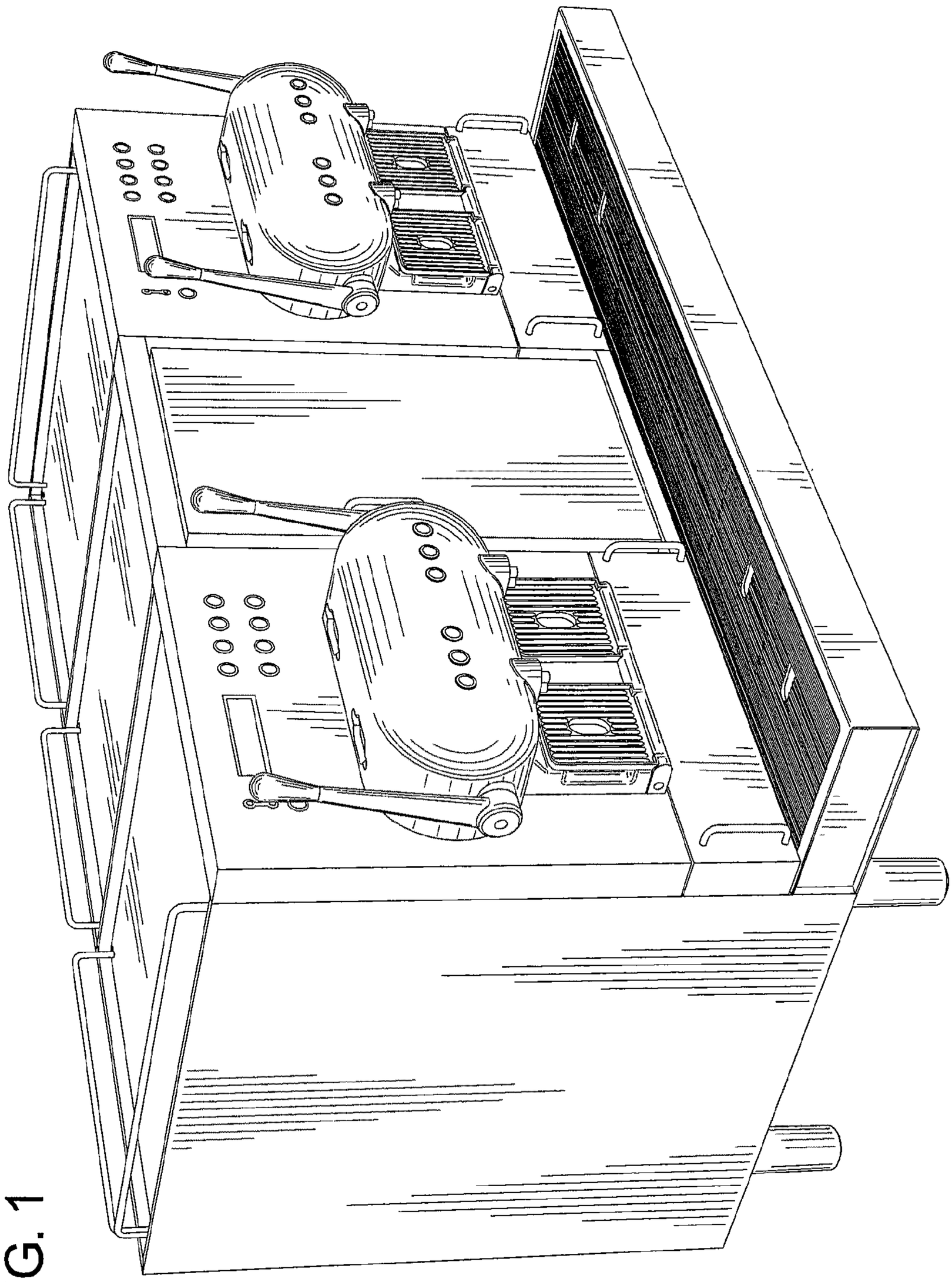

FIG. 1

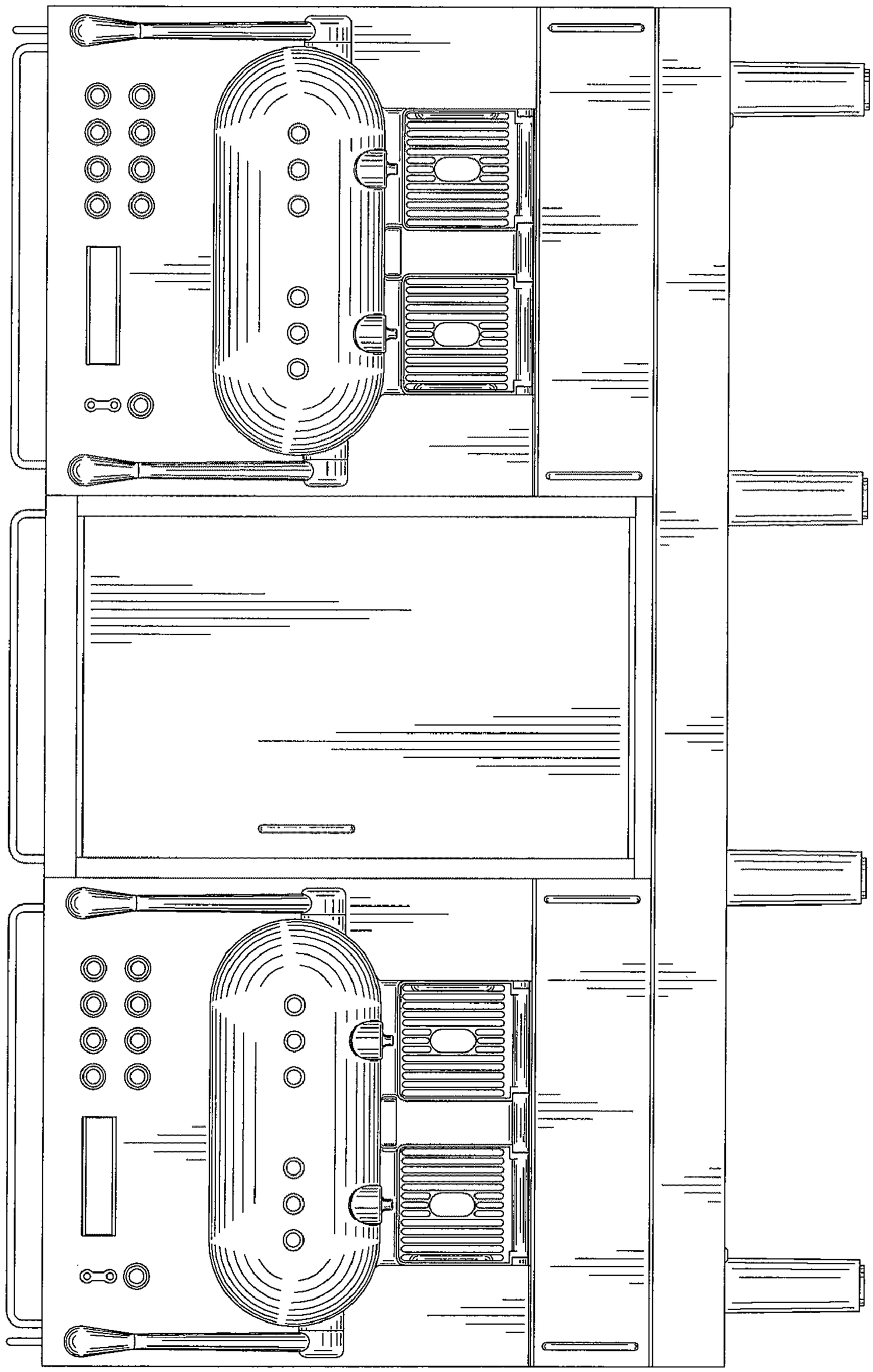

FIG. 2

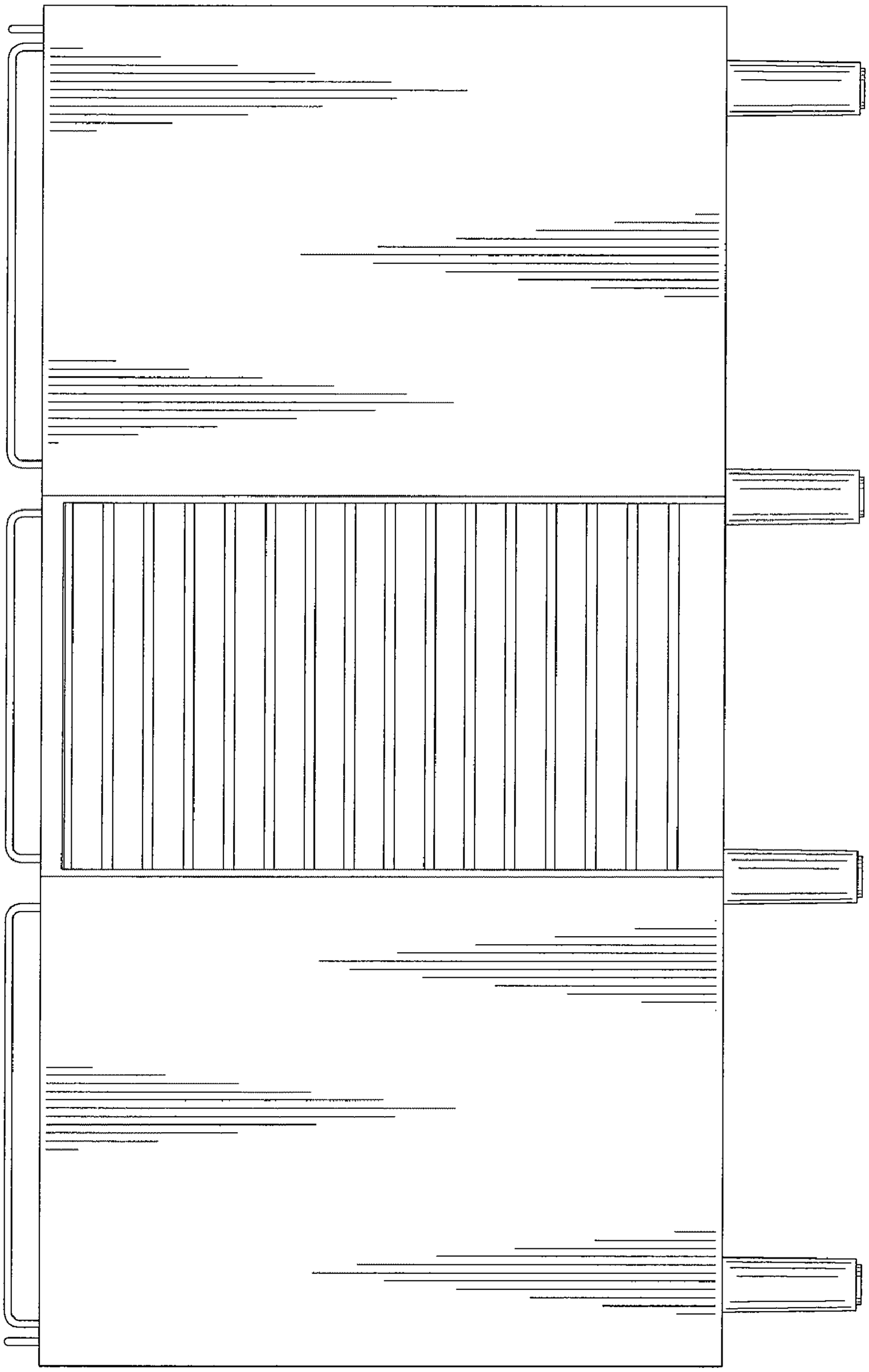

FIG. 3

FIG. 4

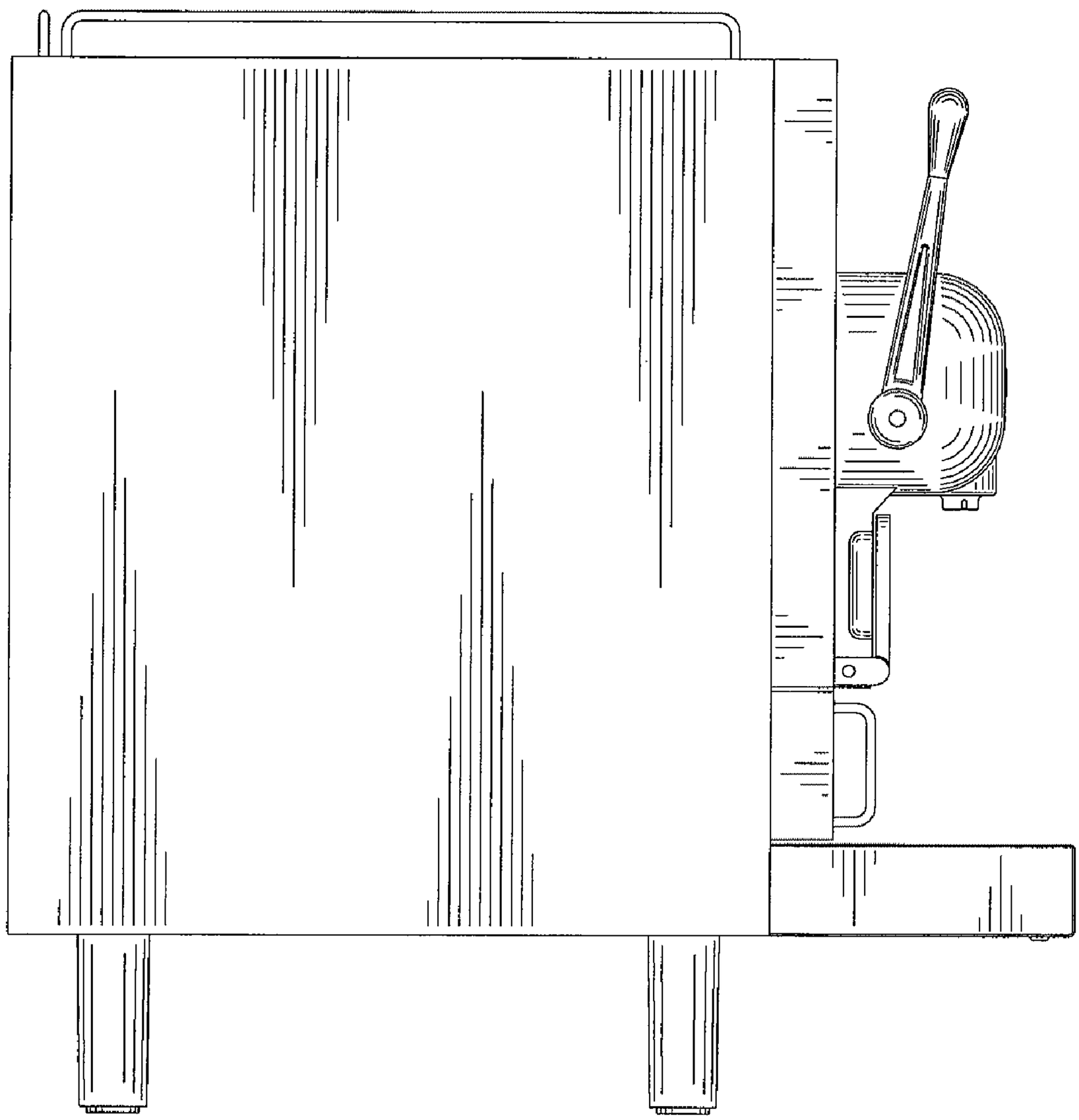

FIG. 5

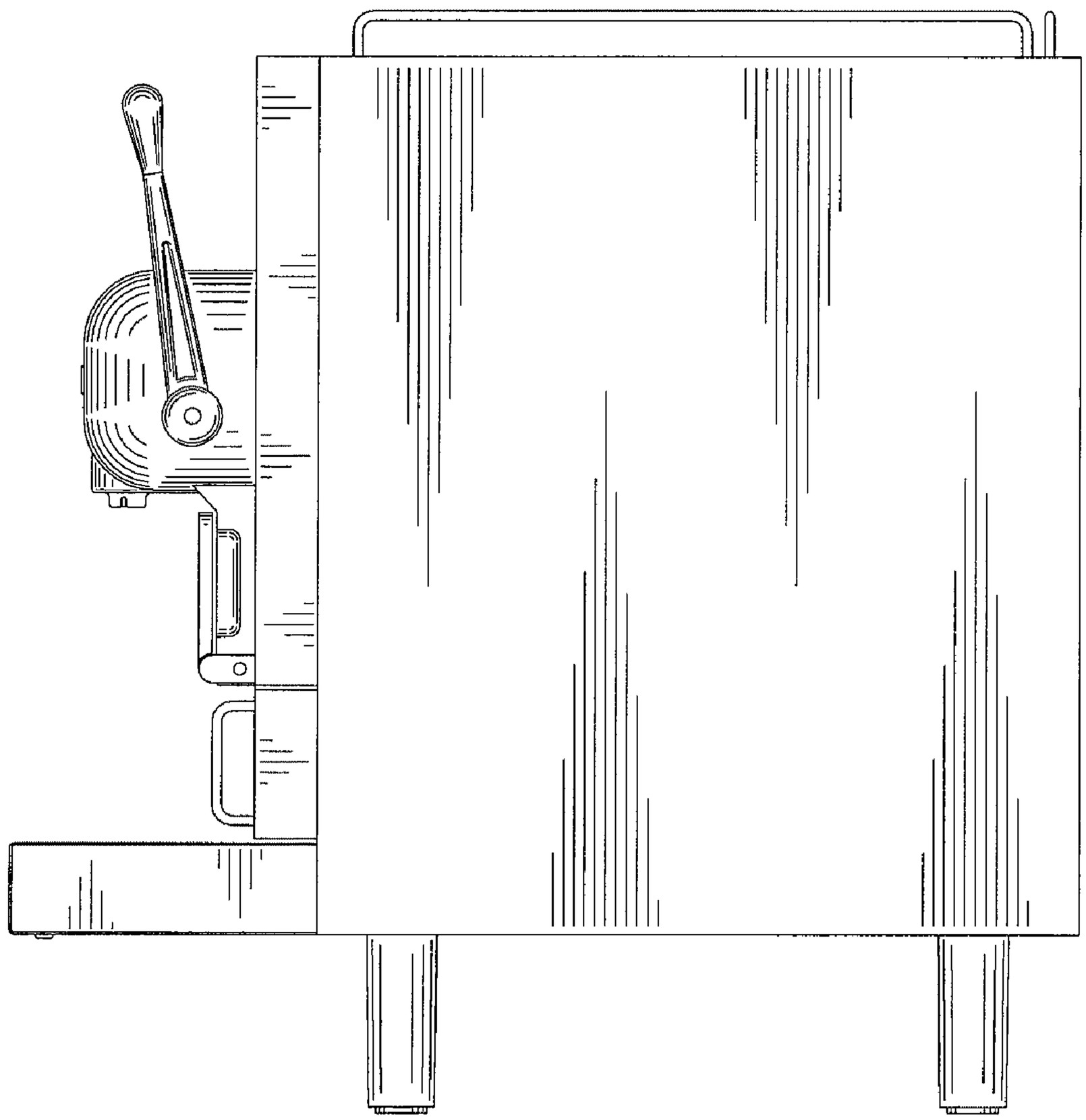

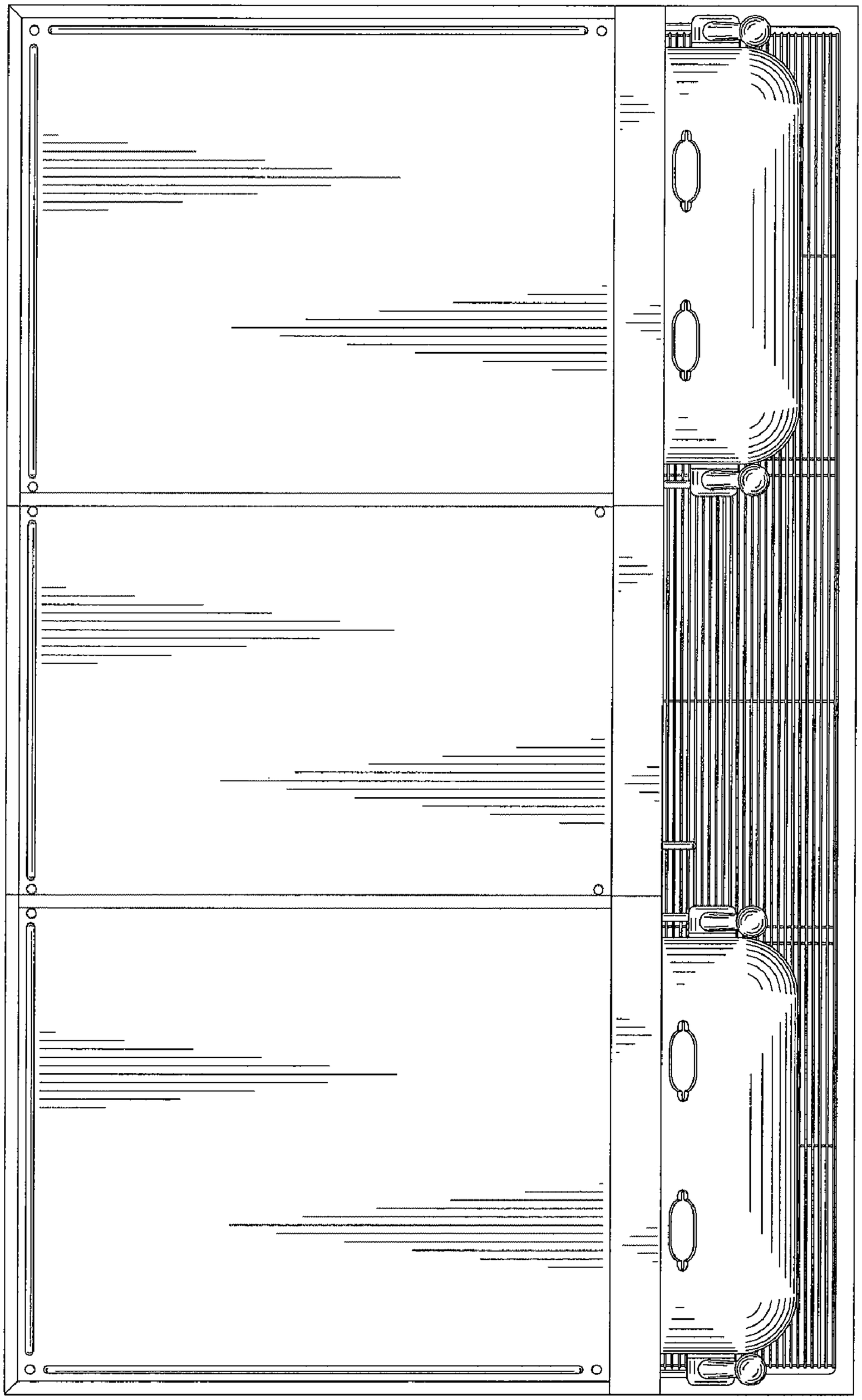

FIG. 6

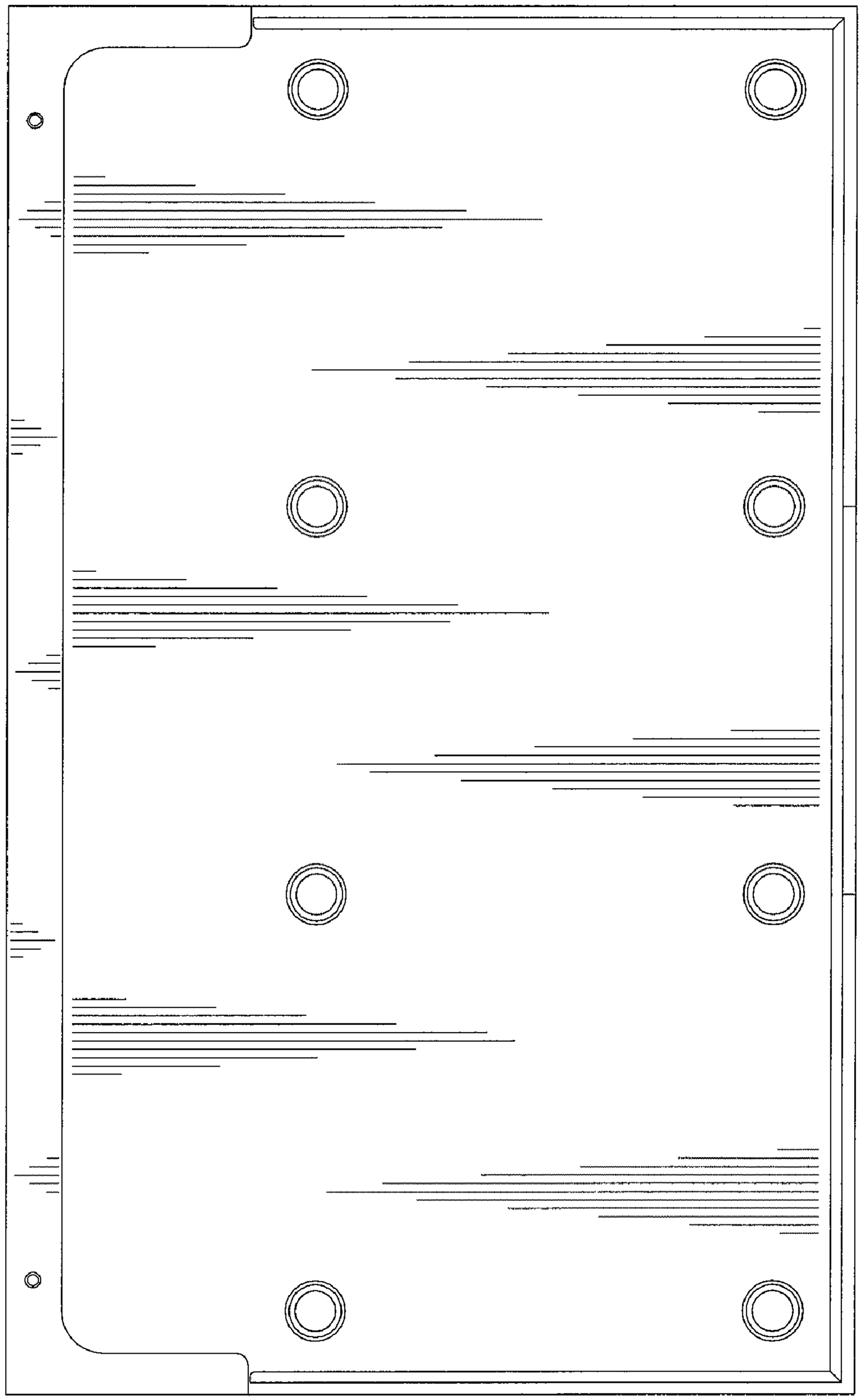

FIG. 7