US00D667111S

(12) United States Design Patent
Robinson

(10) **Patent No.: US D667,111 S**
(45) **Date of Patent: ** Sep. 11, 2012**

(54) **HANDLE FOR SURGICAL INSTRUMENT**

(75) Inventor: **Nicholas Robinson**, Leeds (GB)

(73) Assignee: **Surgical Innovations Limited**, Leeds (GB)

(**) Term: **14 Years**

(21) Appl. No.: **29/401,857**

(22) Filed: **Sep. 16, 2011**

(30) **Foreign Application Priority Data**

Mar. 17, 2011 (EM) 001836990-0003

(51) **LOC (9) Cl.** **24-02**
(52) **U.S. Cl.** **D24/133**
(58) **Field of Classification Search** D24/133, D24/137, 138, 143, 144, 145, 146, 147, 148, D24/149; D8/51, 57, 107; 606/1, 130, 139, 606/148, 174, 175, 205; 600/101–183
See application file for complete search history.

(56) **References Cited**

U.S. PATENT DOCUMENTS

D252,554	S	*	8/1979	Lancer	D8/83
4,667,657	A	*	5/1987	Kulik et al.	600/215
D315,407	S	*	3/1991	Bradrick et al.	D24/130
D325,437	S	*	4/1992	Hull	D24/114
D350,605	S	*	9/1994	Williams	D24/133
D388,171	S	*	12/1997	Fekete	D24/133
D478,987	S	*	8/2003	Groenke et al.	D24/146
D543,626	S	*	5/2007	Watschke et al.	D24/133
D544,602	S	*	6/2007	Hughett et al.	D24/144
D575,395	S	*	8/2008	Hushka	D24/133
D615,197	S	*	5/2010	Koh et al.	D24/133
D634,426	S	*	3/2011	Zollers	D24/147
2009/0054734	A1	*	2/2009	DeSantis et al.	600/153

* cited by examiner

Primary Examiner — Bridget L Eland
(74) *Attorney, Agent, or Firm* — Kirton McConkie; Evan R. Witt

(57) **CLAIM**

The ornamental design for an handle for surgical instrument, as shown and described.

DESCRIPTION

FIG. **1** is a perspective view showing my new design of the handle for surgical instrument design.
FIG. **2** is top plan view of the handle for surgical instrument design of FIG. **1**, the bottom plan view being substantially the same.
FIG. **3** is a front elevation view thereof, the rear elevation view being substantially the same.
FIG. **4** is a right side elevation view thereof; and,
FIG. **5** is a left side elevation view thereof.
The wire frame lines are intended to indicate surface contour and are not intended to be surface ornamentation.

1 Claim, 4 Drawing Sheets

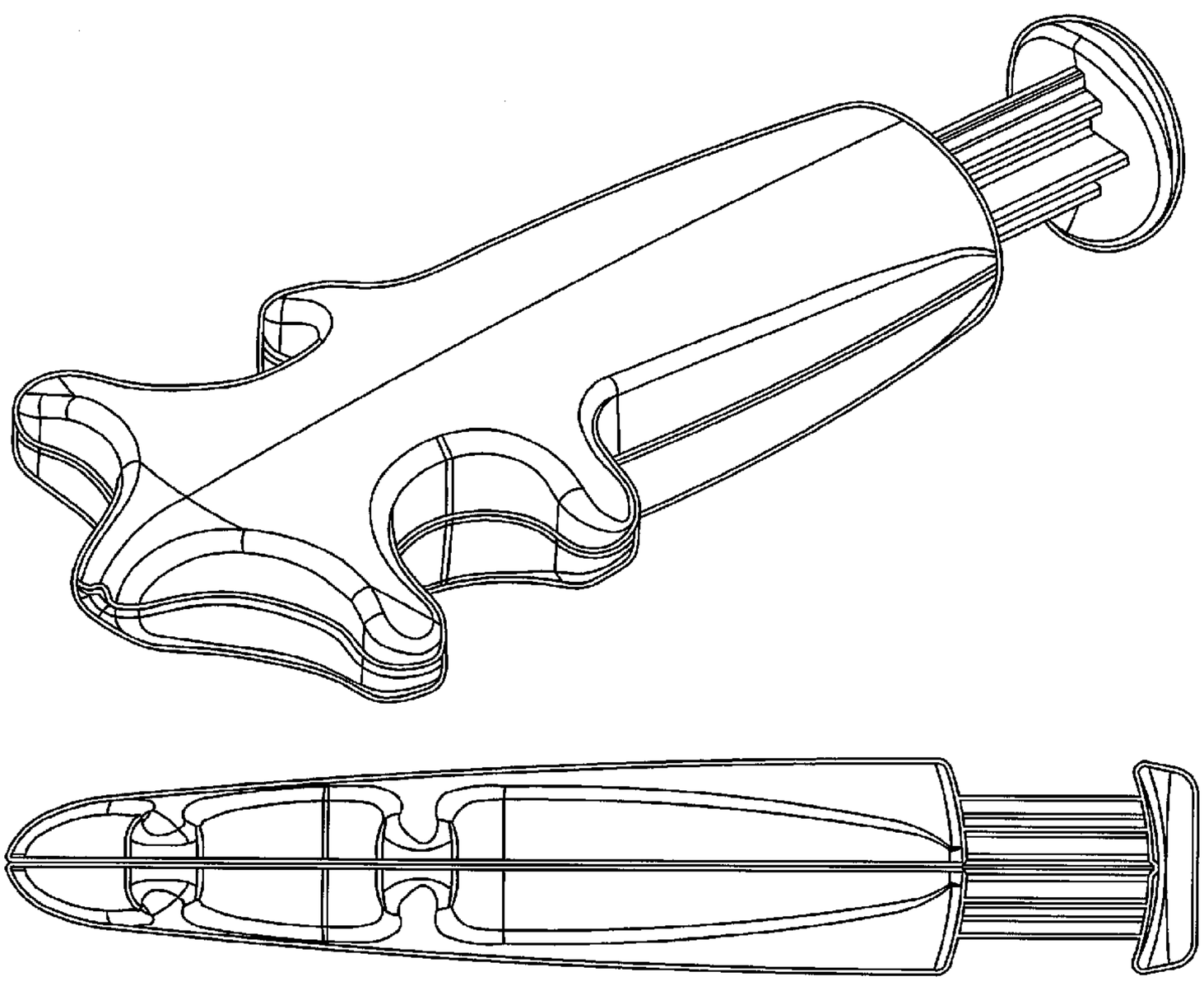

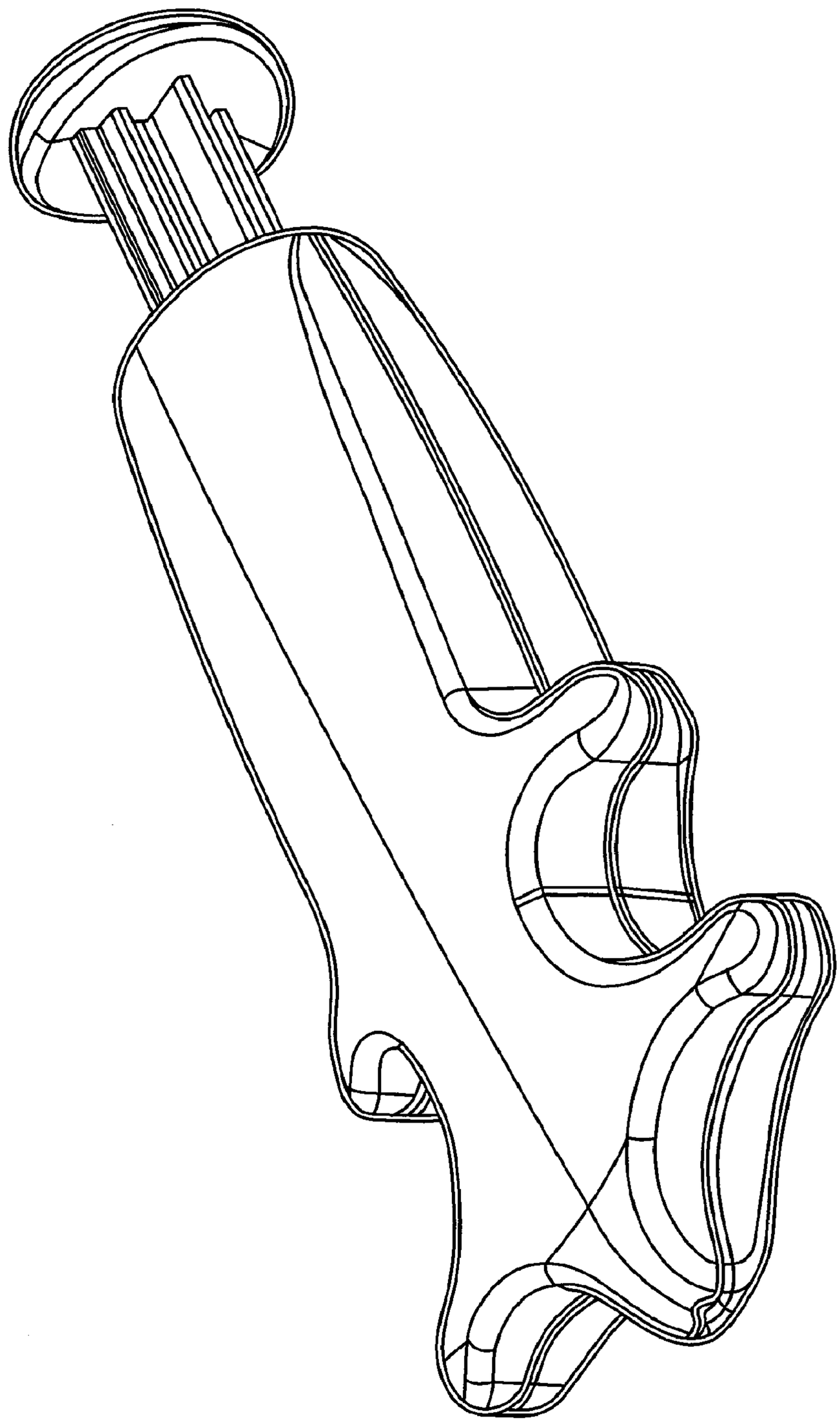

FIG. 1

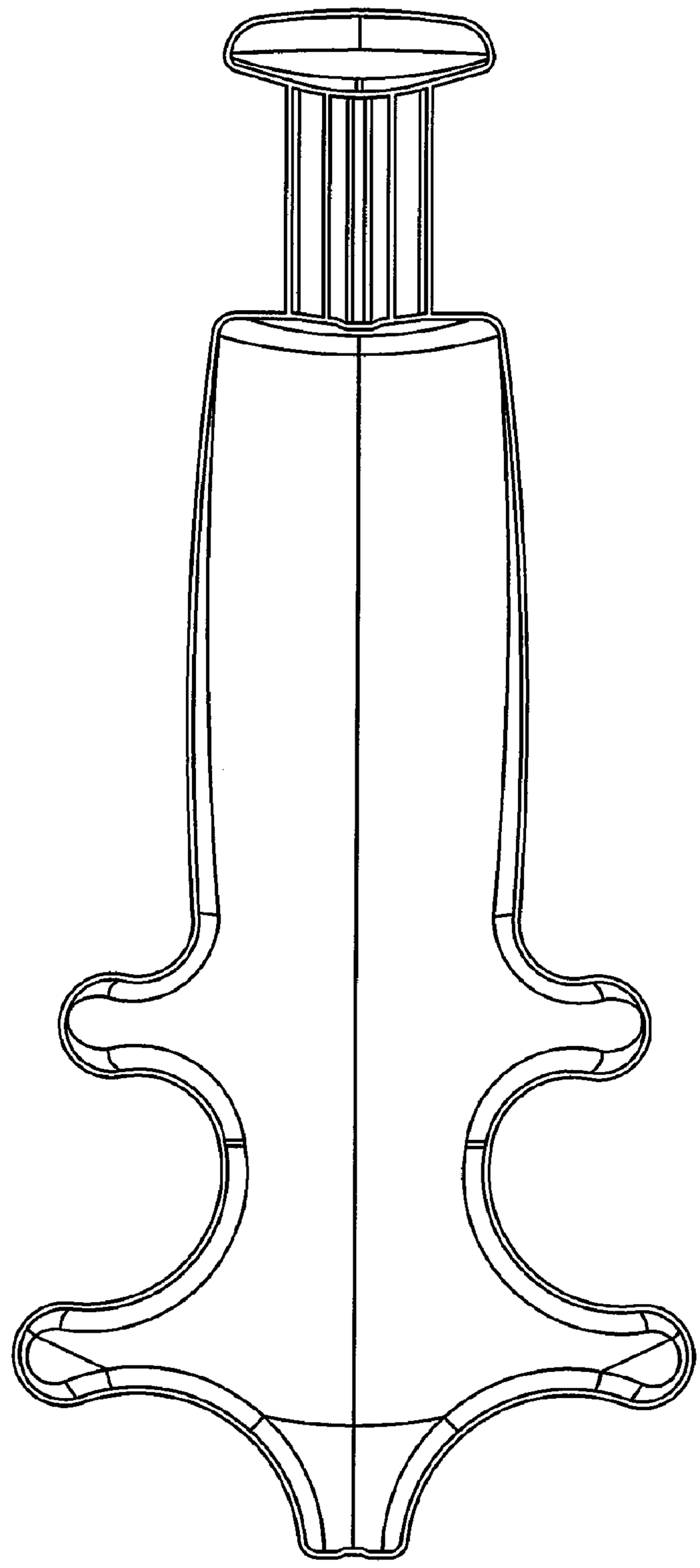

FIG. 2

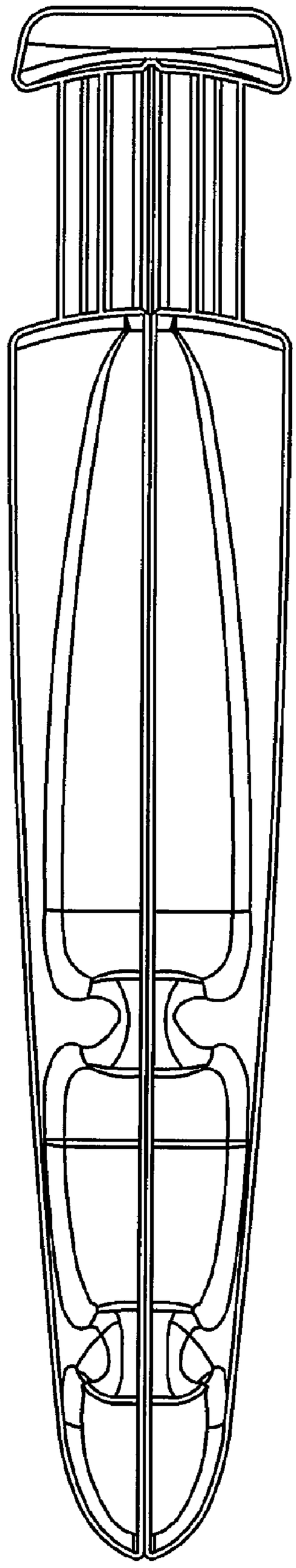

FIG. 3

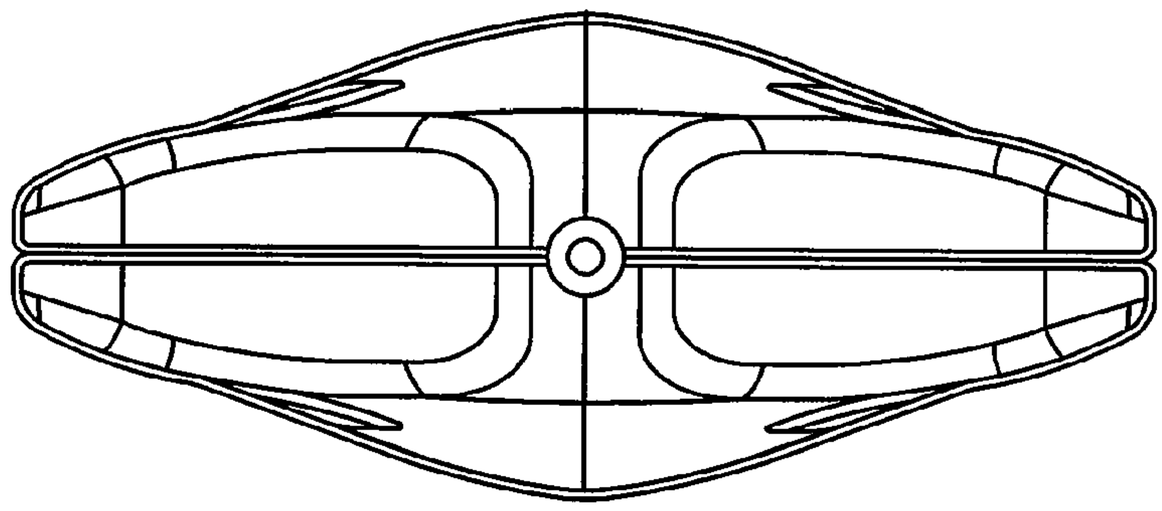

FIG. 5

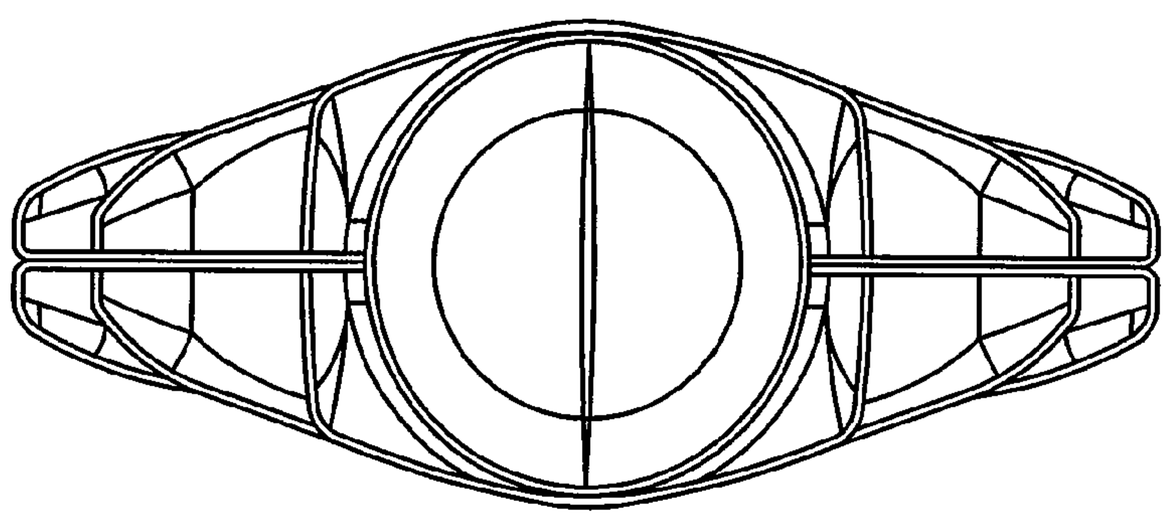

FIG. 4