US00D666653S

(12) United States Design Patent
Nusser

(10) Patent No.: US D666,653 S
(45) Date of Patent: ** Sep. 4, 2012

(54) **MICROSCOPE ASSEMBLY**

(75) Inventor: **Daniel Nusser**, Aalen (DE)

(73) Assignee: **Carl Zeiss Meditec AG**, Jena (DE)

(**) Term: **14 Years**

(21) Appl. No.: **29/404,920**

(22) Filed: **Oct. 26, 2011**

Related U.S. Application Data

(62) Division of application No. 29/347,837, filed on Jun. 21, 2010, now Pat. No. Des. 650,405.

(30) **Foreign Application Priority Data**

Dec. 22, 2009 (EM) 001186019

(51) **LOC (9) Cl.** **16-06**
(52) **U.S. Cl.** **D16/131**
(58) **Field of Classification Search** D16/130, D16/131; 359/368, 374, 382, 384, 375, 376, 359/377, 379, 380, 381, 383, 385; 248/123.2, 248/280.11; 351/212, 221; 606/1; 600/427; D21/483
See application file for complete search history.

(56) **References Cited**

U.S. PATENT DOCUMENTS

3,809,454	A	5/1974	Brambring	
4,241,891	A	12/1980	Rudolph	
4,605,287	A	8/1986	Lang et al.	
4,742,947	A	5/1988	Coffman et al.	
4,807,989	A	2/1989	Nagano et al.	
5,052,789	A	10/1991	Kleinberg	
5,074,651	A	12/1991	Nagamine	
5,173,802	A	12/1992	Heller	
5,186,422	A	2/1993	Nakamura	
5,288,043	A	2/1994	Tigliev	
5,332,181	A	7/1994	Schweizer et al.	
5,667,186	A	9/1997	Luber et al.	
5,748,366	A	5/1998	Yasanuga et al.	
5,820,623	A	10/1998	Ng	
5,861,983	A	1/1999	Twisselmann	
6,050,530	A	4/2000	Nakamura	
6,434,416	B1	8/2002	Mizoguchi et al.	
6,471,165	B2	10/2002	Twisselmann	
D482,708	S	11/2003	Matuschek	
6,646,798	B2	11/2003	Schmidt et al.	
D488,823	S	4/2004	Asaka et al.	
6,785,045	B2 *	8/2004	Utsugi	359/383
D498,247	S	11/2004	Suzuki et al.	
6,813,071	B2 *	11/2004	Takahama	359/381
6,833,950	B2	12/2004	Schmidt	

(Continued)

Primary Examiner — Paula Greene
(74) *Attorney, Agent, or Firm* — Walter Ottesen

(57) **CLAIM**

The ornamental design for a microscope assembly, as shown and described.

DESCRIPTION

FIG. **1** is a perspective view of the microscope assembly of my new design;
FIG. **2** is a bottom plan view of said microscope assembly of FIG. **1**;
FIG. **3** is a rear elevation view of said microscope assembly of FIG. **1**;
FIG. **4** is a left side elevation view of said microscope assembly of FIG. **1**;
FIG. **5** is a front elevation view of said microscope assembly of FIG. **1**;
FIG. **6** is a right side elevation view of said microscope assembly of FIG. **1**; and,
FIG. **7** is a top plan view of said microscope assembly of FIG. **1**.
The broken lines form no part of the claimed design.

1 Claim, 7 Drawing Sheets

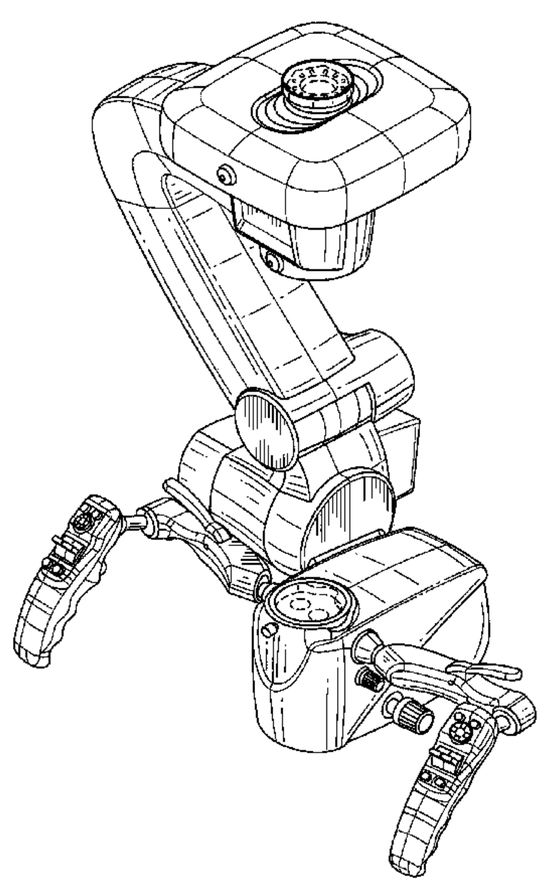

U.S. PATENT DOCUMENTS

6,899,307 B2 5/2005 Strauss et al.
6,937,390 B2 8/2005 Akiyama et al.
7,136,221 B2 11/2006 Strobel et al.
7,219,864 B2 * 5/2007 Strauss et al. 248/122.1
7,232,222 B2 6/2007 Kogawa et al.
7,379,239 B2 * 5/2008 Strobel et al. 359/384
D623,210 S 9/2010 Matuschek et al.
D634,344 S 3/2011 Nusser et al.
7,901,080 B2 3/2011 Hauger et al.
D650,405 S * 12/2011 Nusser D16/131

* cited by examiner

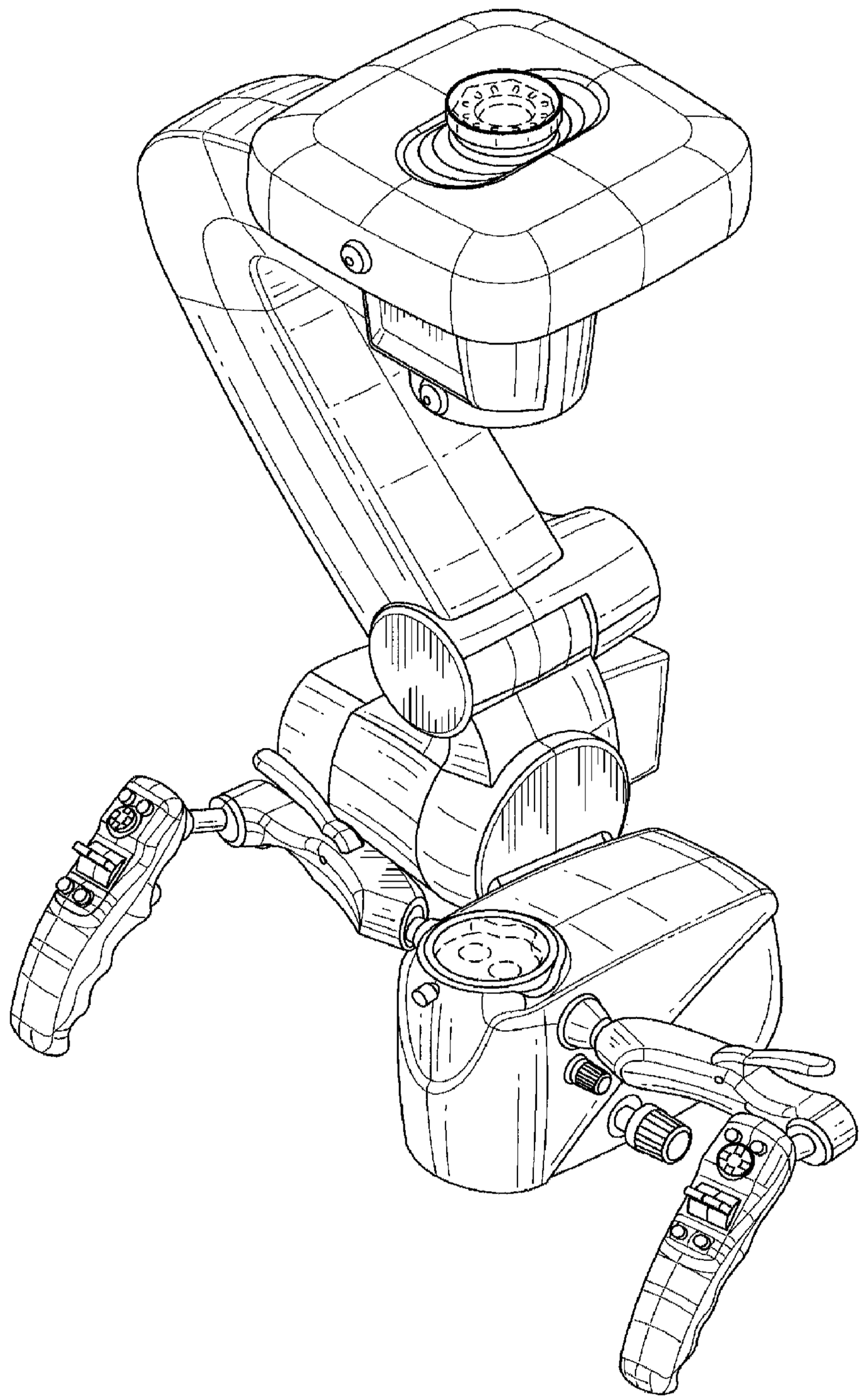

FIG. 1

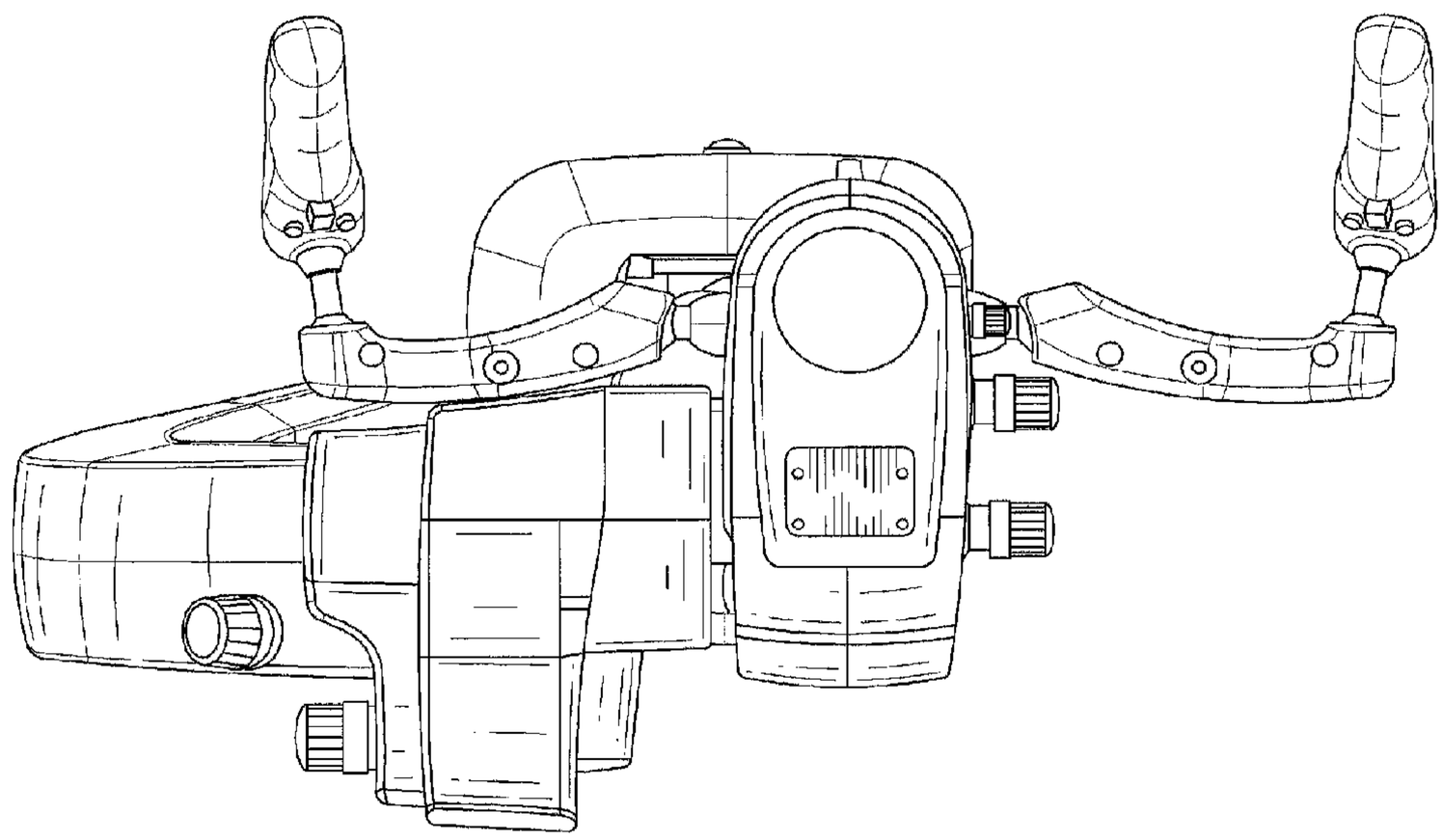

FIG. 2

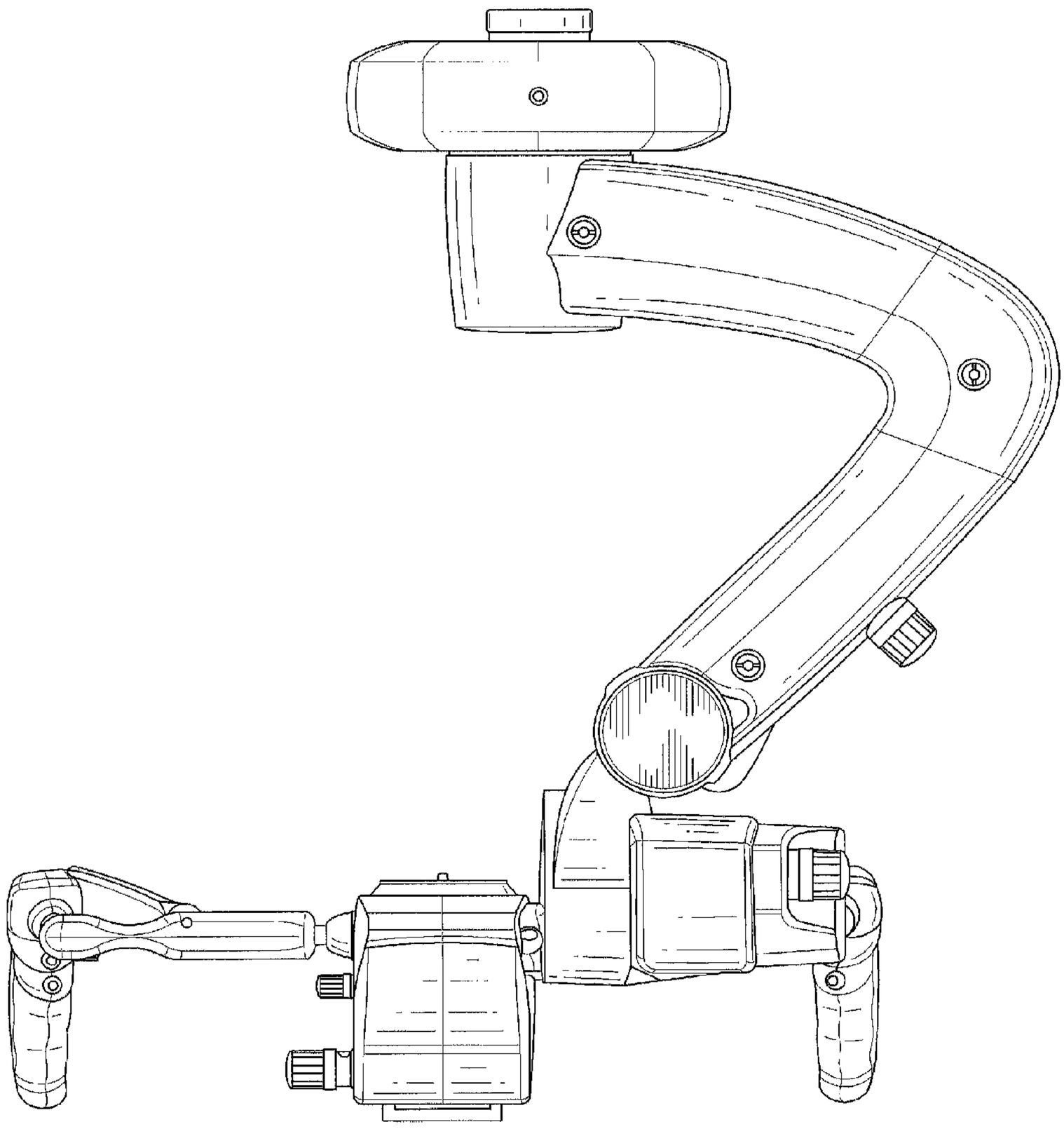

FIG. 3

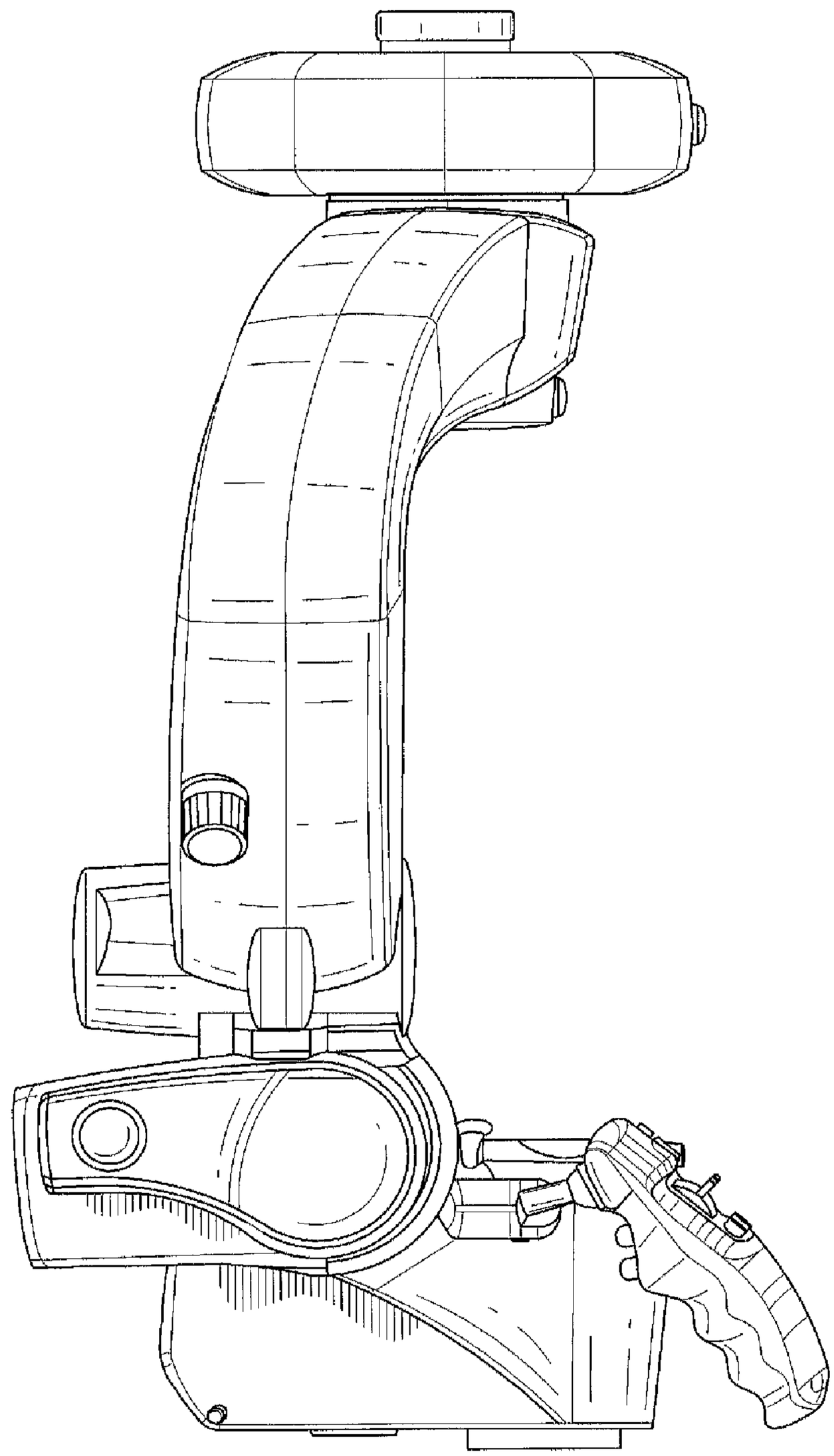

FIG. 4

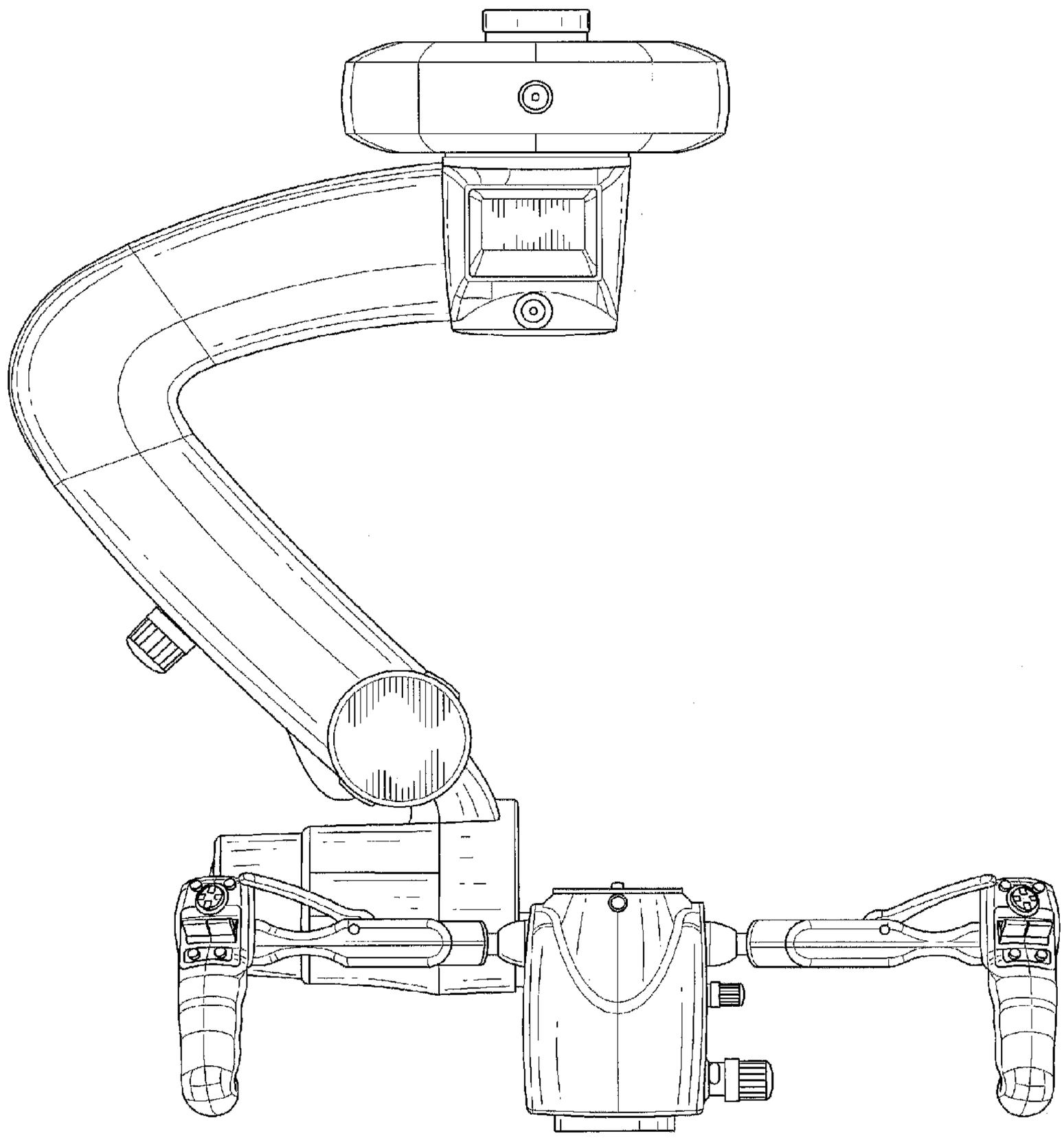

FIG. 5

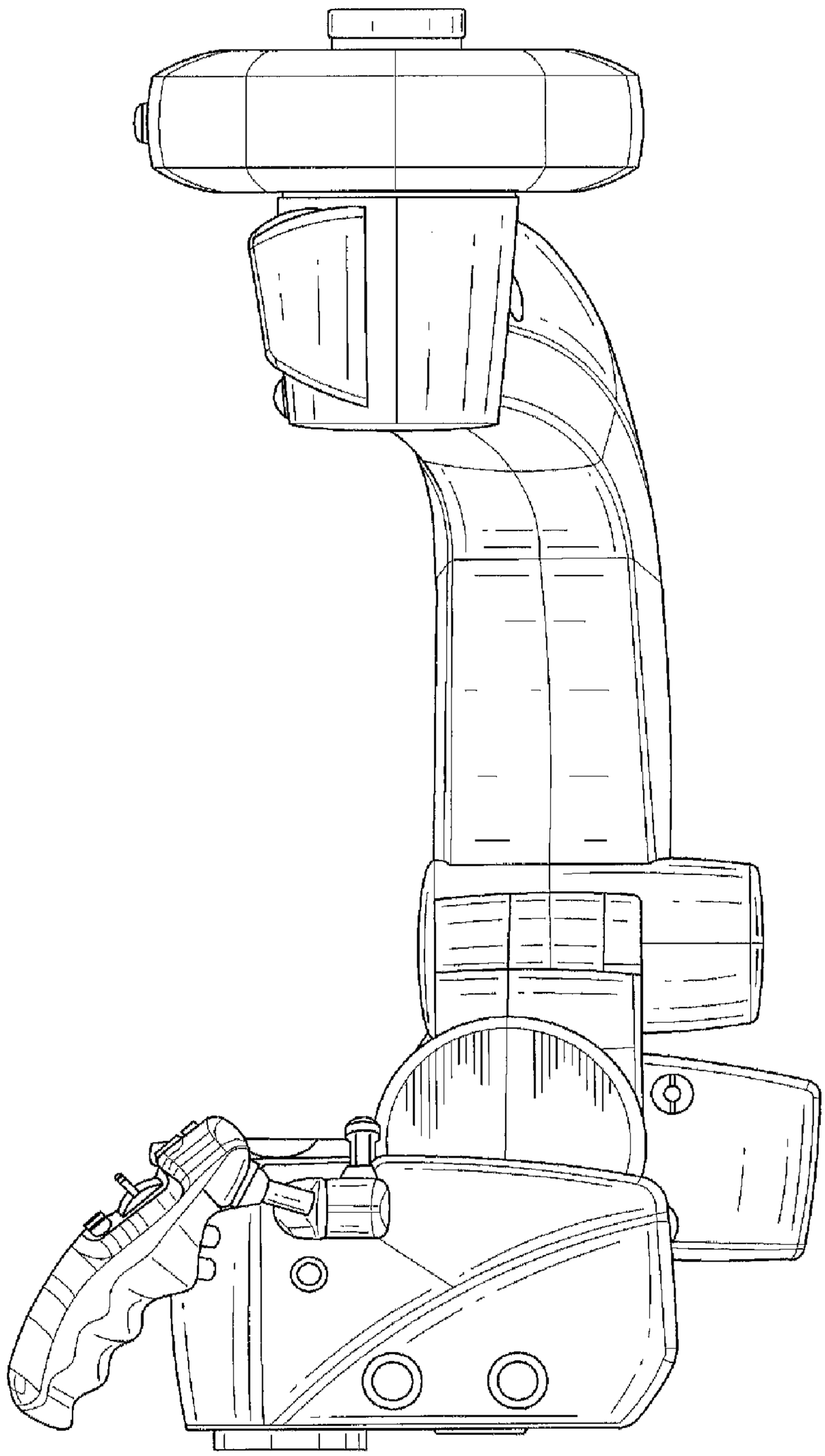

FIG. 6

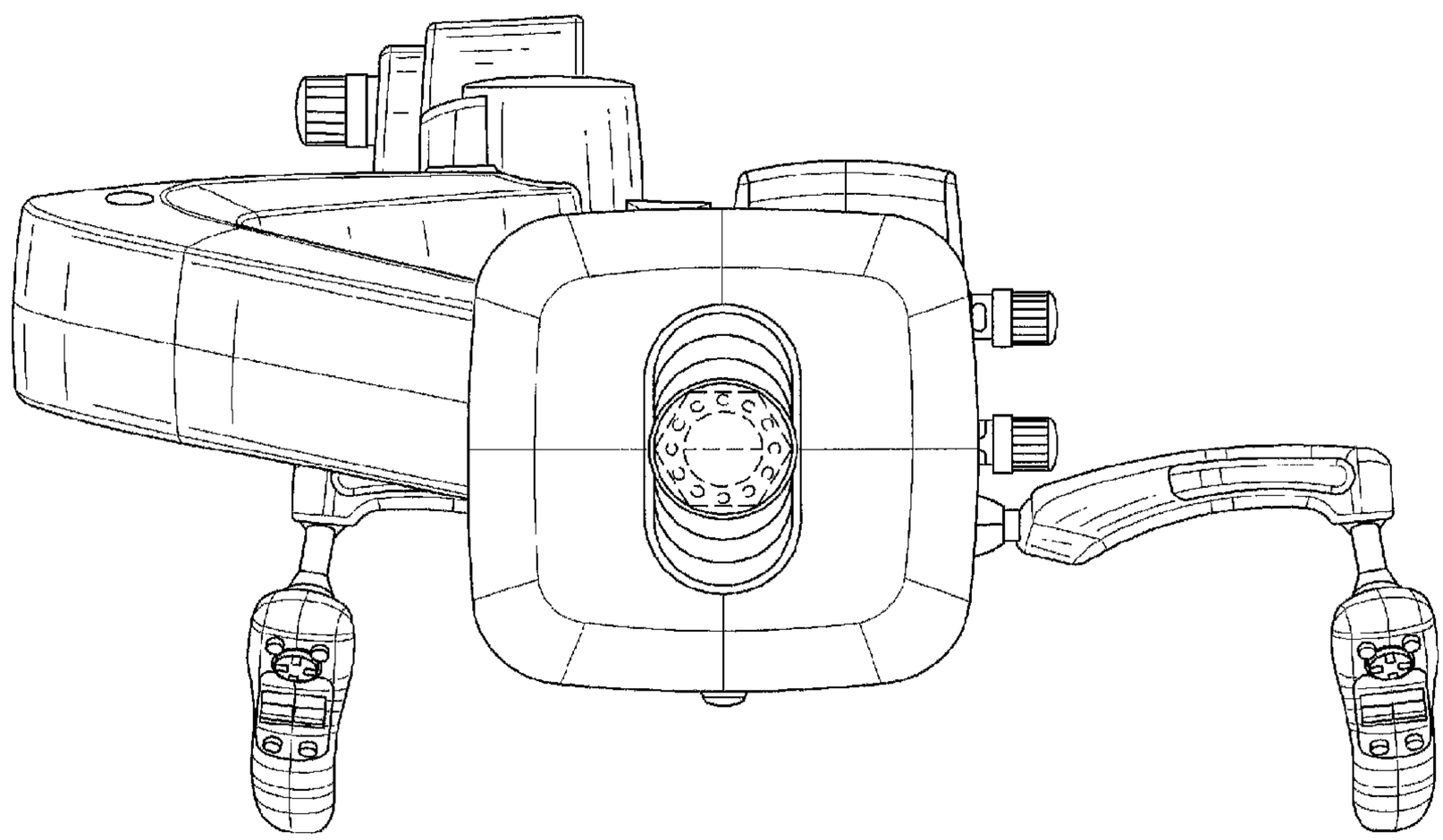

FIG. 7