US00D666558S

(12) United States Design Patent

Naumann et al.

(10) Patent No.: US D666,558 S
(45) Date of Patent: ** Sep. 4, 2012

(54) **PROTECTIVE CASING FOR ELECTRICAL DEVICES**

(75) Inventors: **Reiner Naumann**, Mannheim (DE); **Markus Reinhart**, Hassmersheim (DE); **Frank Hieronymus**, Hesseneck-Schoellenbach (DE)

(73) Assignee: **Cooper Crouse-Hinds GmbH**, Soest (DE)

(**) Term: **14 Years**

(21) Appl. No.: **29/379,304**

(22) Filed: **Nov. 17, 2010**

Related U.S. Application Data

(62) Division of application No. 29/342,085, filed on Aug. 18, 2009, now Pat. No. Des. 629,762.

(30) **Foreign Application Priority Data**

Feb. 18, 2009	(CN)	2009 3 0005239
Feb. 18, 2009	(CN)	2009 3 0005240
Feb. 18, 2009	(CN)	2009 3 0005241
Feb. 18, 2009	(CN)	2009 3 0005242
Feb. 18, 2009	(CN)	2009 3 0005243
Feb. 18, 2009	(CN)	2009 3 0005244
Feb. 18, 2009	(CN)	2009 3 0005245
Feb. 18, 2009	(CN)	2009 3 0005246
Feb. 18, 2009	(CN)	2009 3 0005247
Feb. 18, 2009	(CN)	2009 3 0005248
Feb. 18, 2009	(CN)	2009 3 0005249
Feb. 18, 2009	(CN)	2009 3 0005250
Feb. 18, 2009	(EP)	001089700

(51) **LOC (9) Cl.** **13-03**
(52) **U.S. Cl.** **D13/160**
(58) **Field of Classification Search** ..... D13/158, D13/159, 160, 161, 162, 184, 199; 200/43.14, 200/50.01, 50.21–50.23, 51 R, 293, 400, 200/401; 361/42, 44, 45, 50, 71, 115, 608, 361/634
See application file for complete search history.

(56) **References Cited**

U.S. PATENT DOCUMENTS

D300,315	S	3/1989	Thomas	
5,493,083	A	2/1996	Olivier	
D406,106	S	2/1999	Gonser	
D498,464	S	11/2004	Kim	
D580,880	S	11/2008	Liftran	
D629,367	S	12/2010	Detemple et al.	
D629,762	S	12/2010	Naumann et al.	
D637,977	S *	5/2011	Naumann et al.	D13/160
D641,711	S *	7/2011	Azzola et al.	D13/160
D643,374	S *	8/2011	Naumann et al.	D13/160
D643,375	S *	8/2011	Naumann et al.	D13/160
D643,376	S *	8/2011	Naumann et al.	D13/160

OTHER PUBLICATIONS

Stahl, Control Panels, Distribution Panels and Components, Miniature Circuit-Breaker Series 8562, Dec. 5, 2006, pp. 1-26, Stahl Internal Catalogue.
Stahl, Control Panels, Distribution Panels and Components, EEx d Enclosures in Light Metal or Stainless Steel Flameproof Encapsulation CUBEx Series 8264, Mar. 11, 2006, pp. 1-8, Stahl General Catalogue.
Bartec, Relais, Nov. 2008, 1 page, Bartec brochure.

* cited by examiner

Primary Examiner — Thomas Johannes
(74) *Attorney, Agent, or Firm* — King & Spalding LLP

(57) **CLAIM**

The ornamental design for a protective casing for electrical devices, as shown and described.

DESCRIPTION

FIG. **1** is a perspective view of a protective casing for electrical devices showing our new design;
FIG. **2** is a right side elevation view thereof;
FIG. **3** is a left side elevation view thereof;
FIG. **4** is a front elevation view thereof;
FIG. **5** is a rear elevation view thereof; and,
FIG. **6** is a top plan view thereof.
The broken line portion of the figure drawings is included to show unclaimed subject matter only and forms no part of the claimed design.

1 Claim, 4 Drawing Sheets

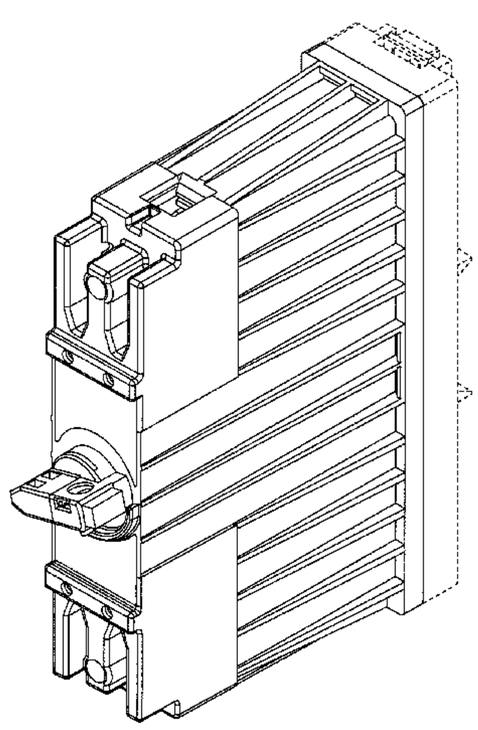

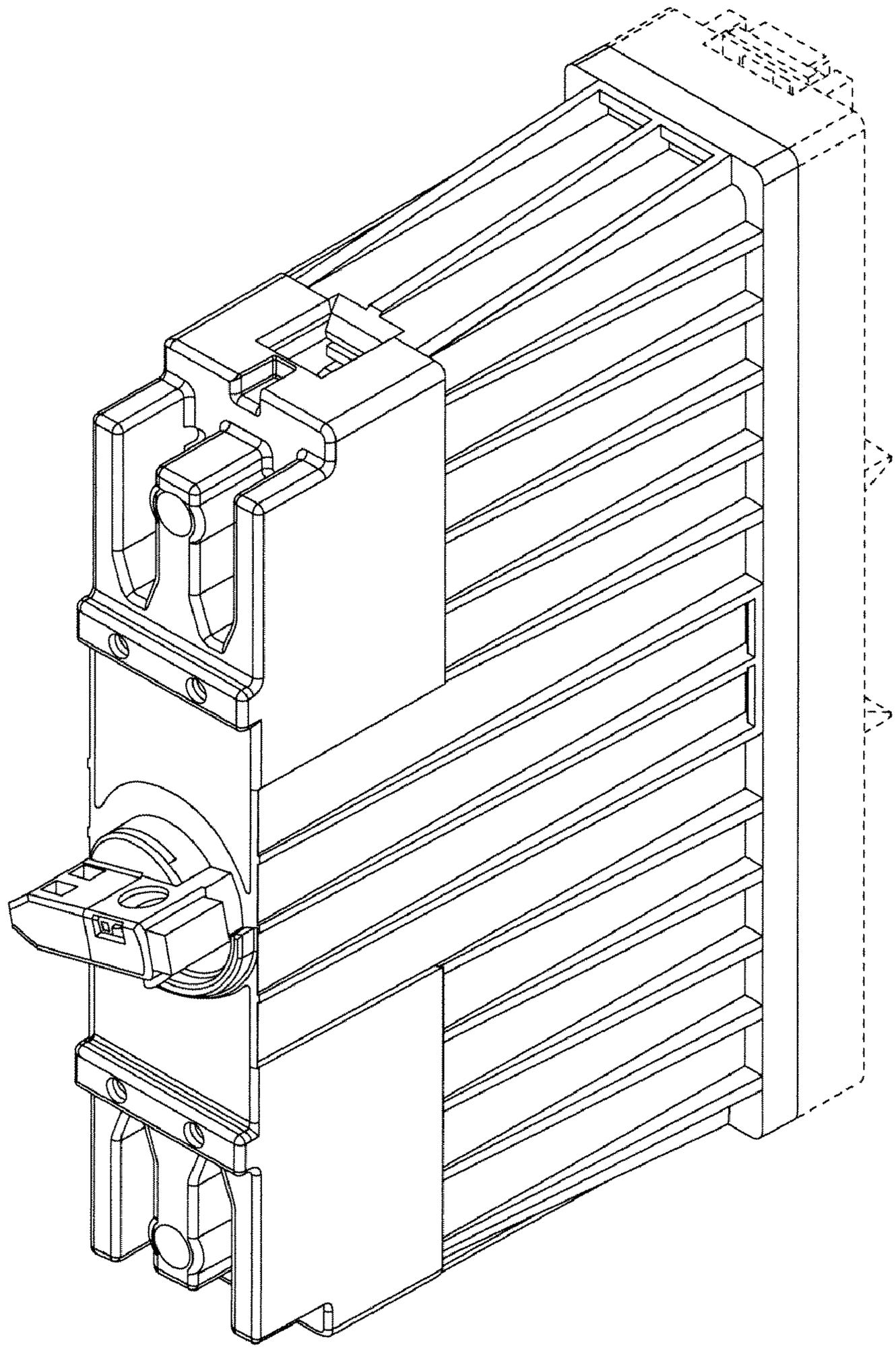

FIG. 1

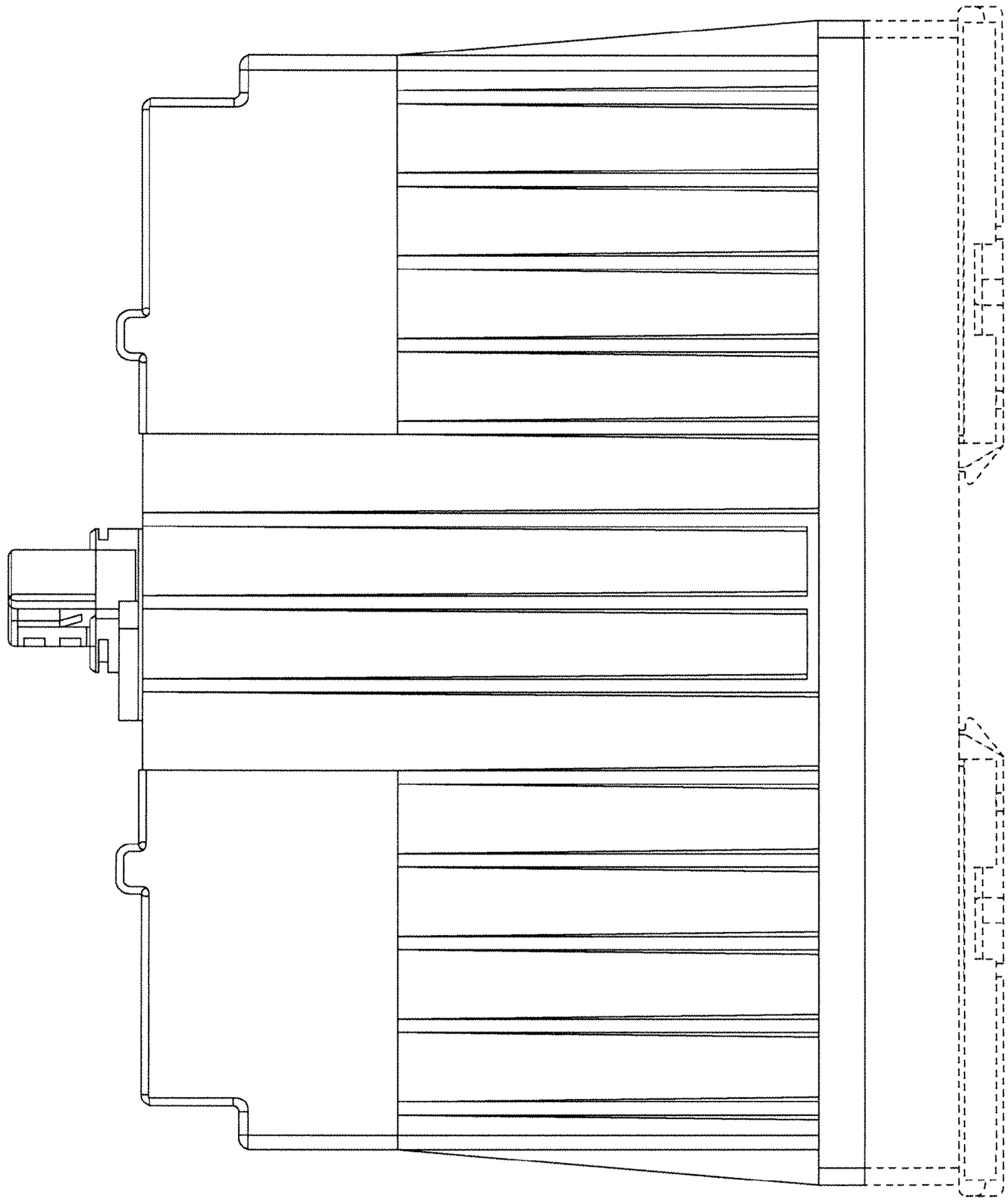

FIG. 2

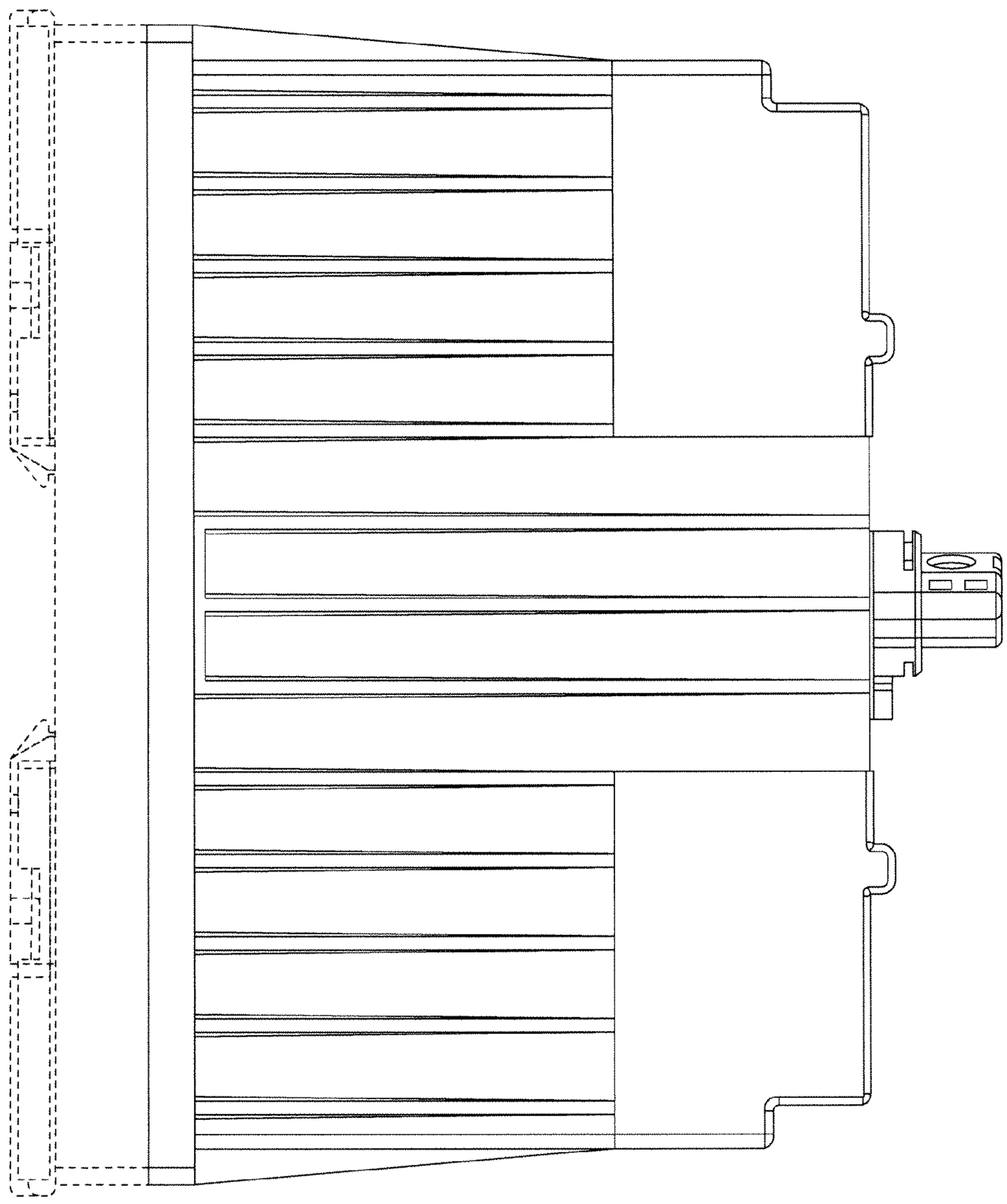

FIG. 3

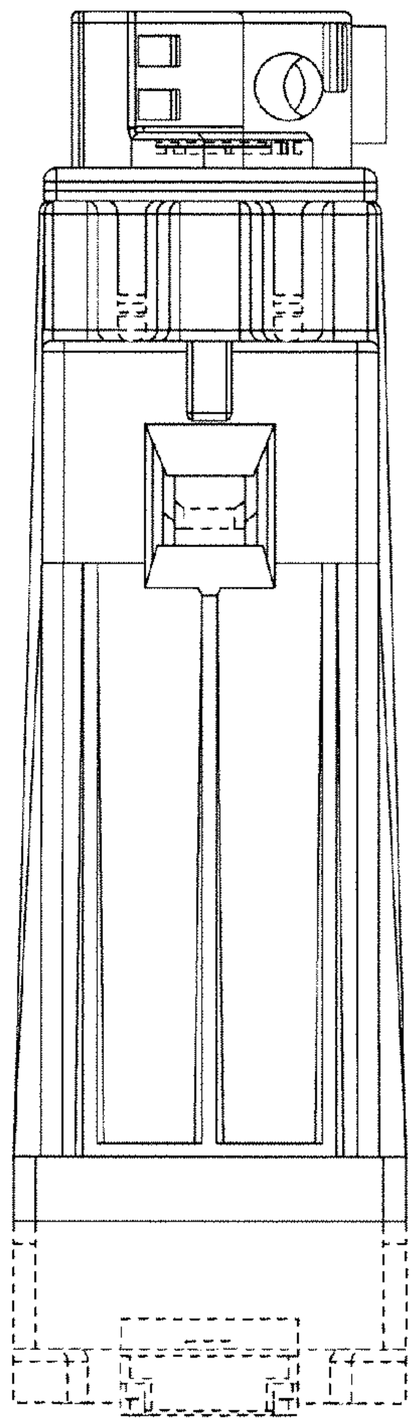

FIG. 4

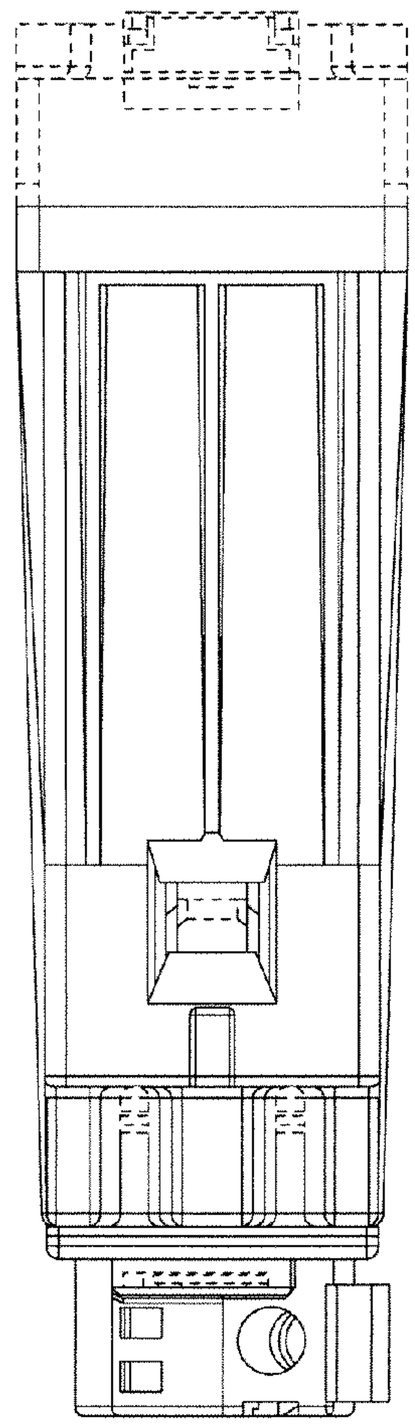

FIG. 5

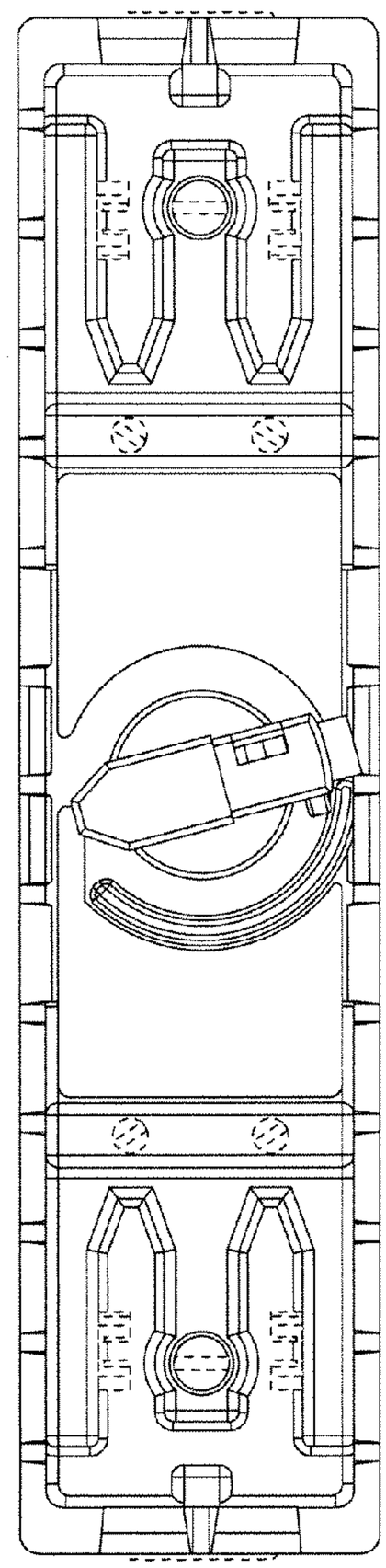

FIG. 6