US00D666467S

(12) United States Design Patent
Salotto

(10) Patent No.: US D666,467 S
(45) Date of Patent: ** Sep. 4, 2012

(54) **CONCRETE FLOAT AND STRAIGHT EDGE BRACKET**

(76) Inventor: **Robert R. Salotto**, Baltimore, MD (US)

(**) Term: **14 Years**

(21) Appl. No.: **29/408,744**

(22) Filed: **Dec. 15, 2011**

(51) **LOC (9) Cl.** **08-05**
(52) **U.S. Cl.** **D8/45**
(58) **Field of Classification Search** D8/45; 404/97, 118, 119; 425/458, 472
See application file for complete search history.

(56) **References Cited**

U.S. PATENT DOCUMENTS

2,897,735	A *	8/1959	Alessio	404/118
4,256,416	A	3/1981	Bishop	
4,449,845	A *	5/1984	Carrillo	404/118
4,520,527	A *	6/1985	Maggio et al.	15/235.8
4,641,995	A *	2/1987	Owens	404/118
4,861,188	A *	8/1989	Rouillard	404/75
5,016,319	A *	5/1991	Stigen	16/426
D324,980	S	3/1992	Owens	
D326,396	S	5/1992	Owens	
D333,245	S	2/1993	Griggs	
5,244,305	A *	9/1993	Lindley	404/97
D343,998	S *	2/1994	Griggs	D8/45
5,393,168	A *	2/1995	Jarvis	404/97
5,460,461	A *	10/1995	McGrath	404/118
5,467,496	A *	11/1995	Jarvis	15/235.8
5,605,415	A	2/1997	Shamblin	
5,980,154	A	11/1999	Record	
6,981,819	B1 *	1/2006	Suckow et al.	404/114
7,293,938	B1 *	11/2007	Suckow et al.	404/114
7,540,688	B1 *	6/2009	Suckow et al.	404/114
7,651,296	B2 *	1/2010	Lindley	404/118
D621,236	S	8/2010	Bahler et al.	
8,016,517	B1 *	9/2011	Pardue	404/118
2003/0143025	A1	7/2003	Catania	
2007/0206991	A1	9/2007	Brotzel	
2010/0226718	A1	9/2010	Obergfoll	

* cited by examiner

Primary Examiner — Susan E Krakower
Assistant Examiner — Roselynne Cody
(74) *Attorney, Agent, or Firm* — QuickPatents, Inc.; Kevin Prince

(57) **CLAIM**

I claim the ornamental design for a concrete float and straight edge bracket, as shown and described.

DESCRIPTION

FIG. **1** is a perspective view of a concrete float and straight edge bracket, showing my new design;
FIG. **2** is a front elevational view thereof;
FIG. **3** is a rear elevational view thereof;
FIG. **4** is a right-side elevational view thereof, the left-side elevational view being a mirror image thereof;
FIG. **5** is a top plan view thereof; and,
FIG. **6** is a bottom plan view thereof.
The broken lines showing a float board and handles in FIG. **1** and a hand tool in FIG. **4** depict environmental matter and form no part of the claimed design.

1 Claim, 3 Drawing Sheets

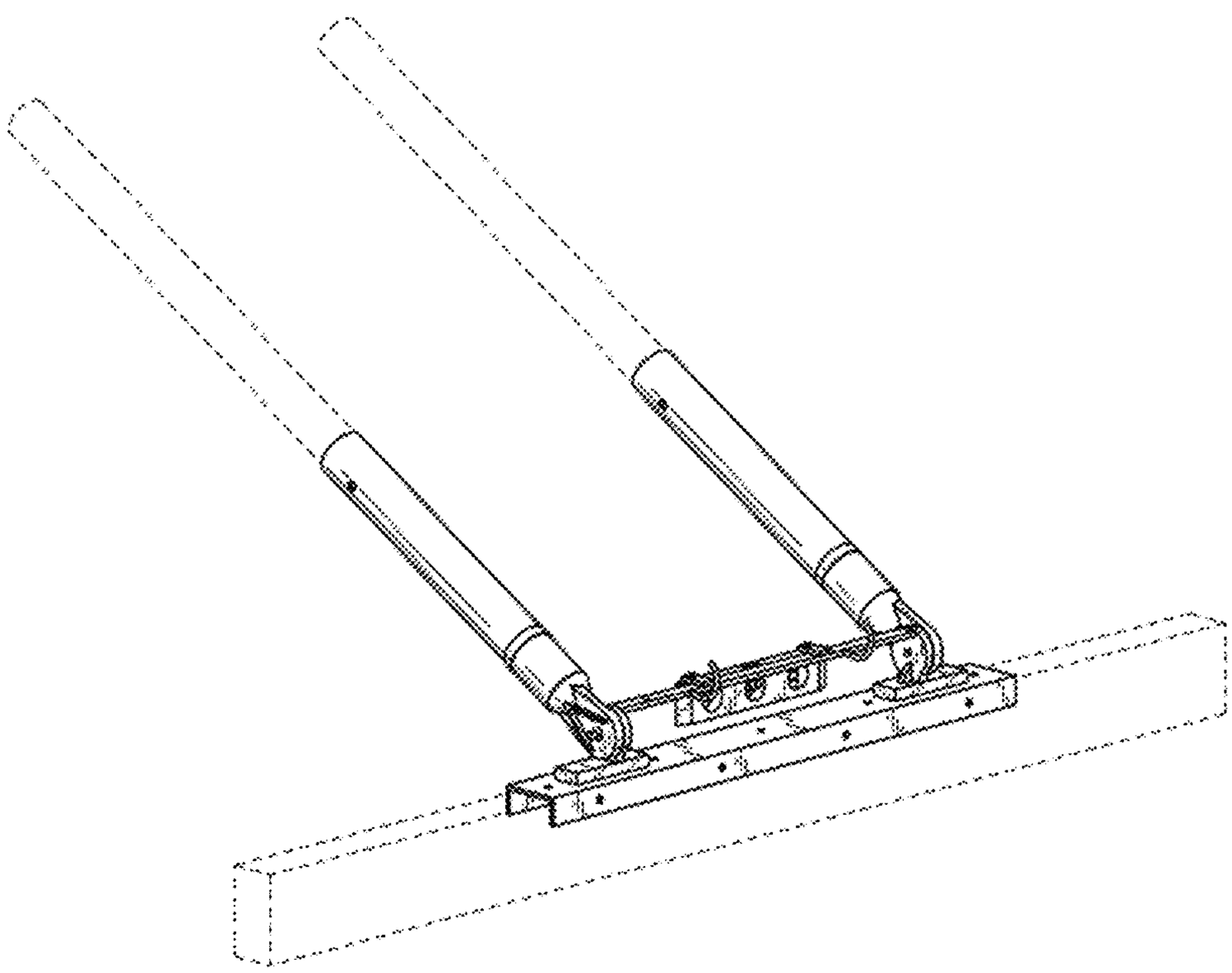

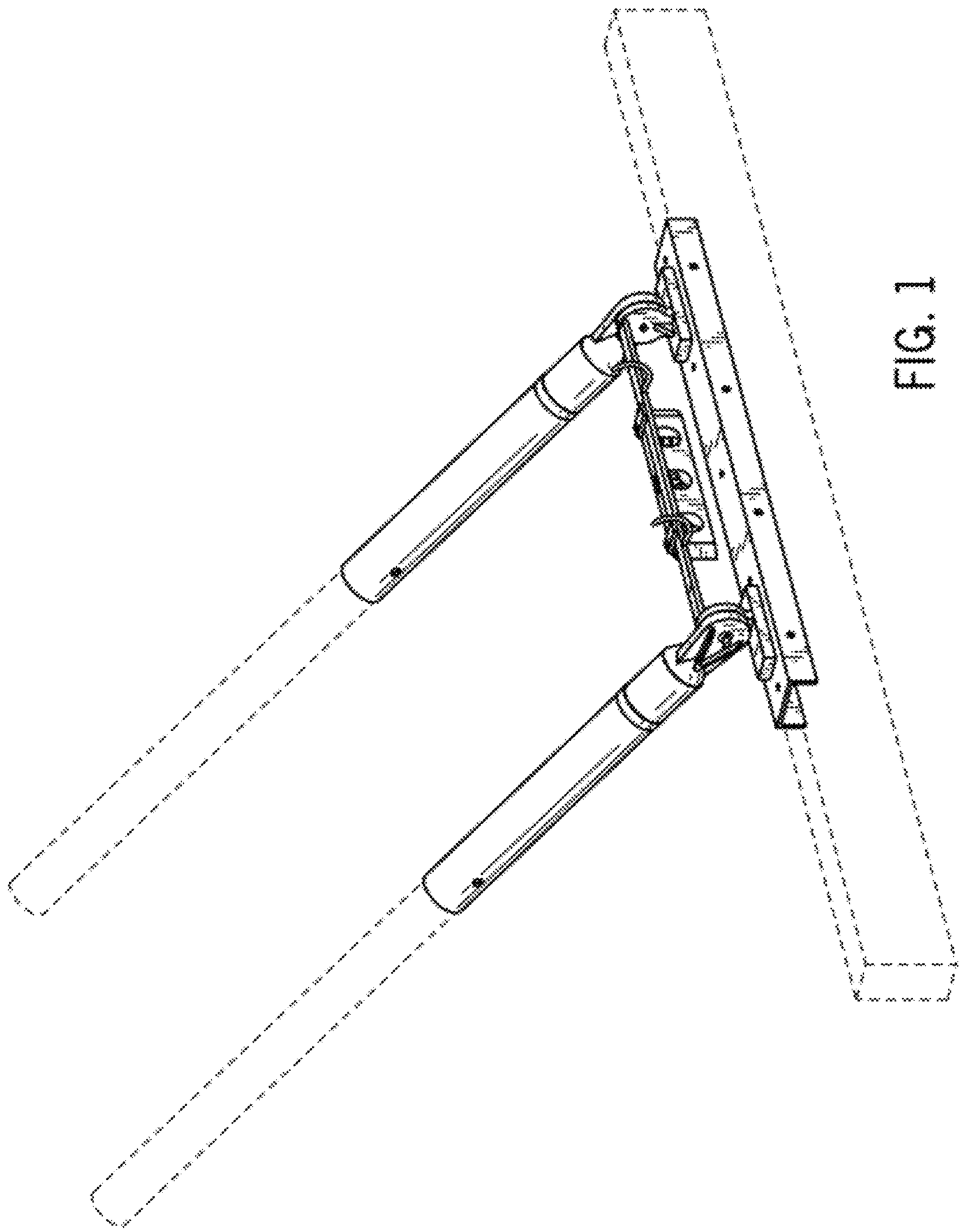

FIG. 1

FIG. 2

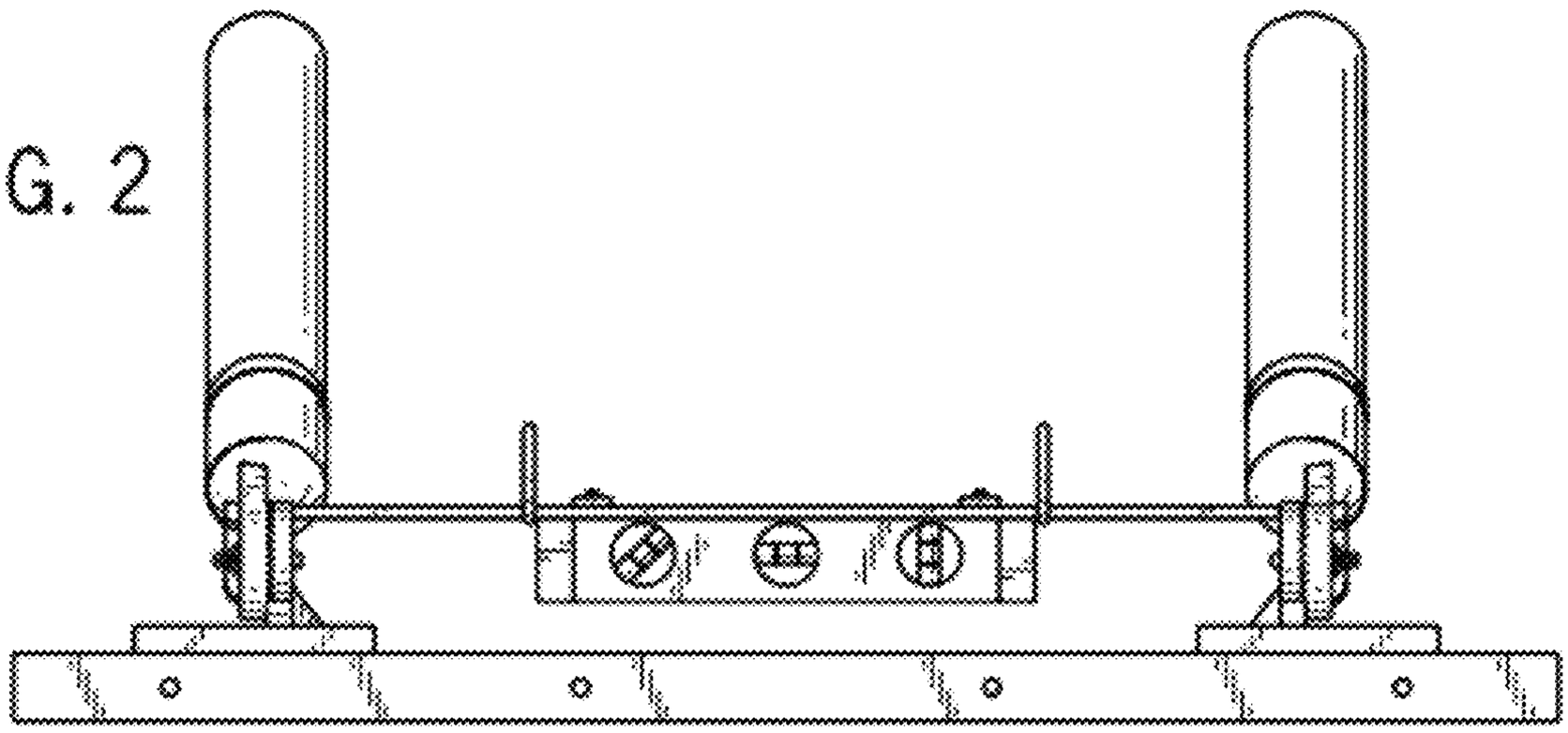

FIG. 3

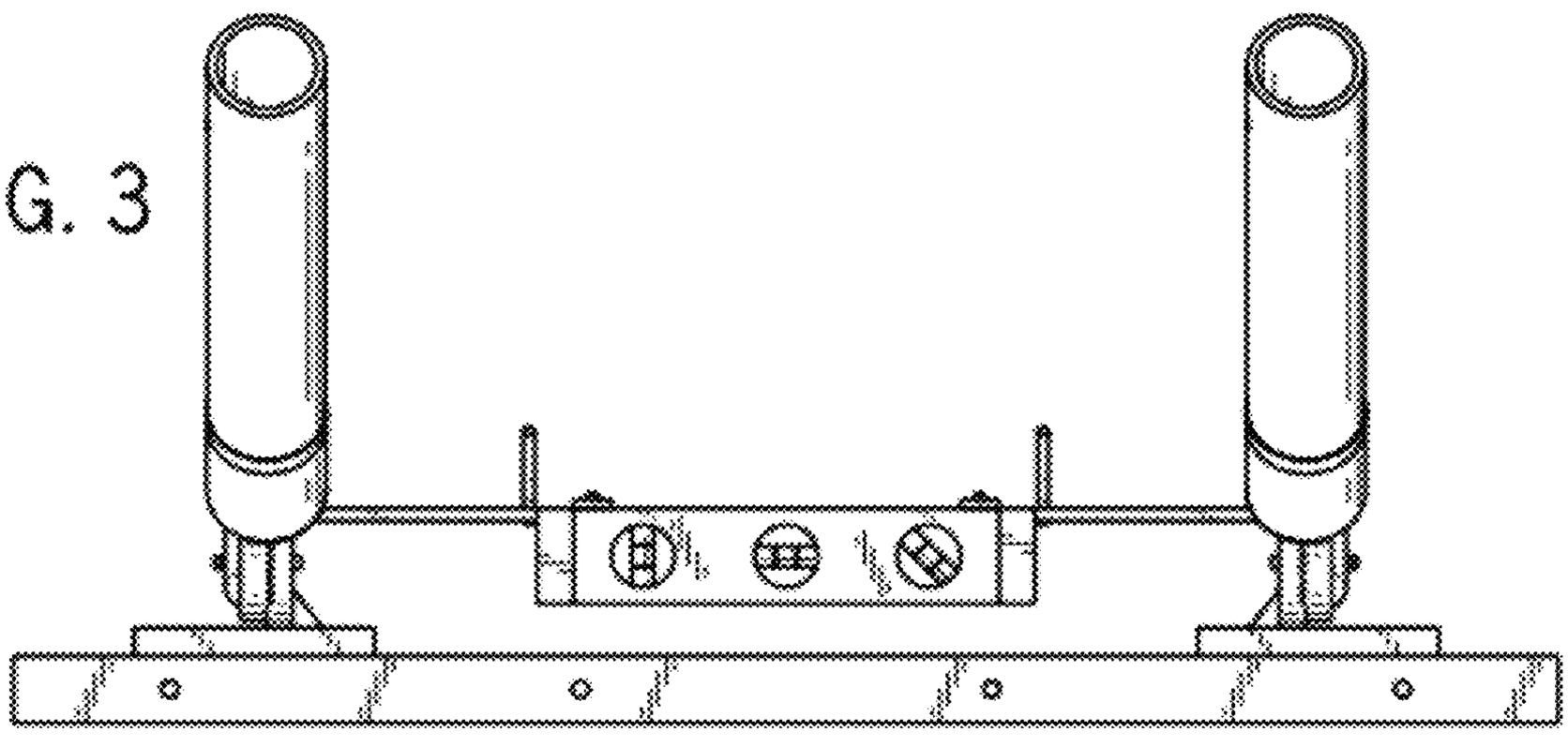

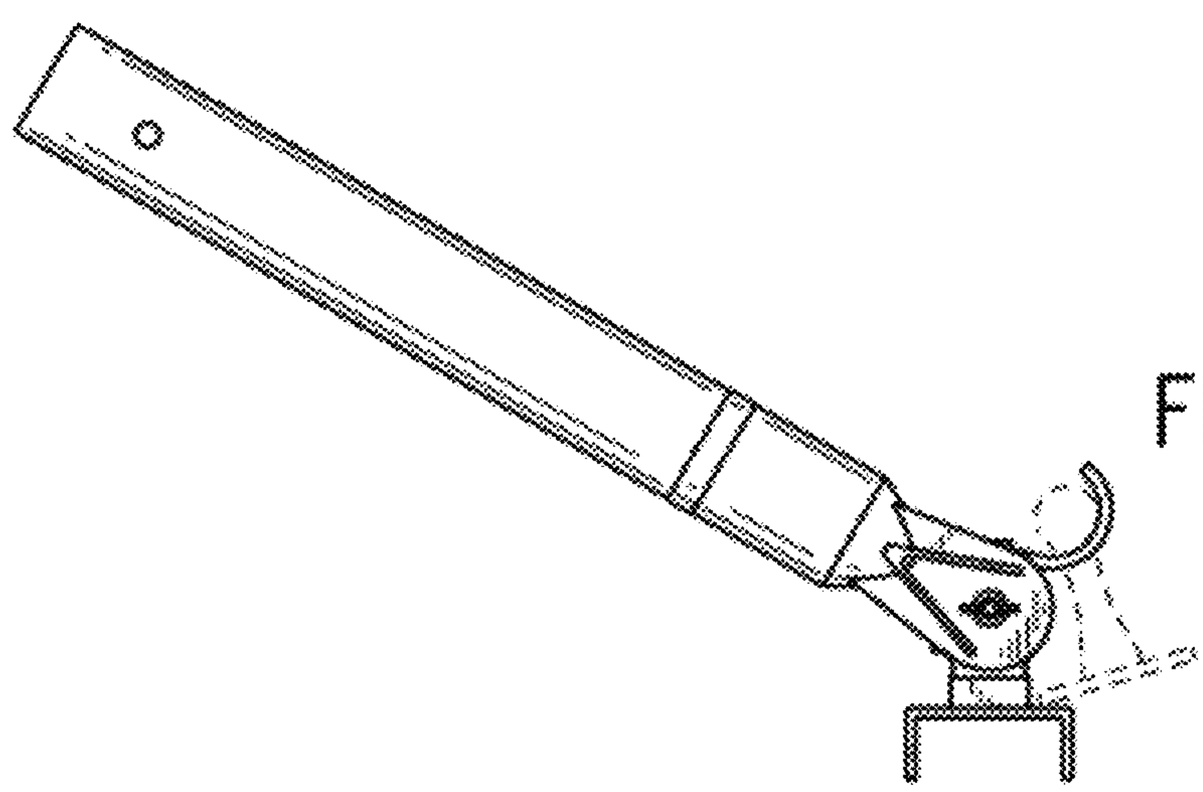

FIG. 4

FIG. 5

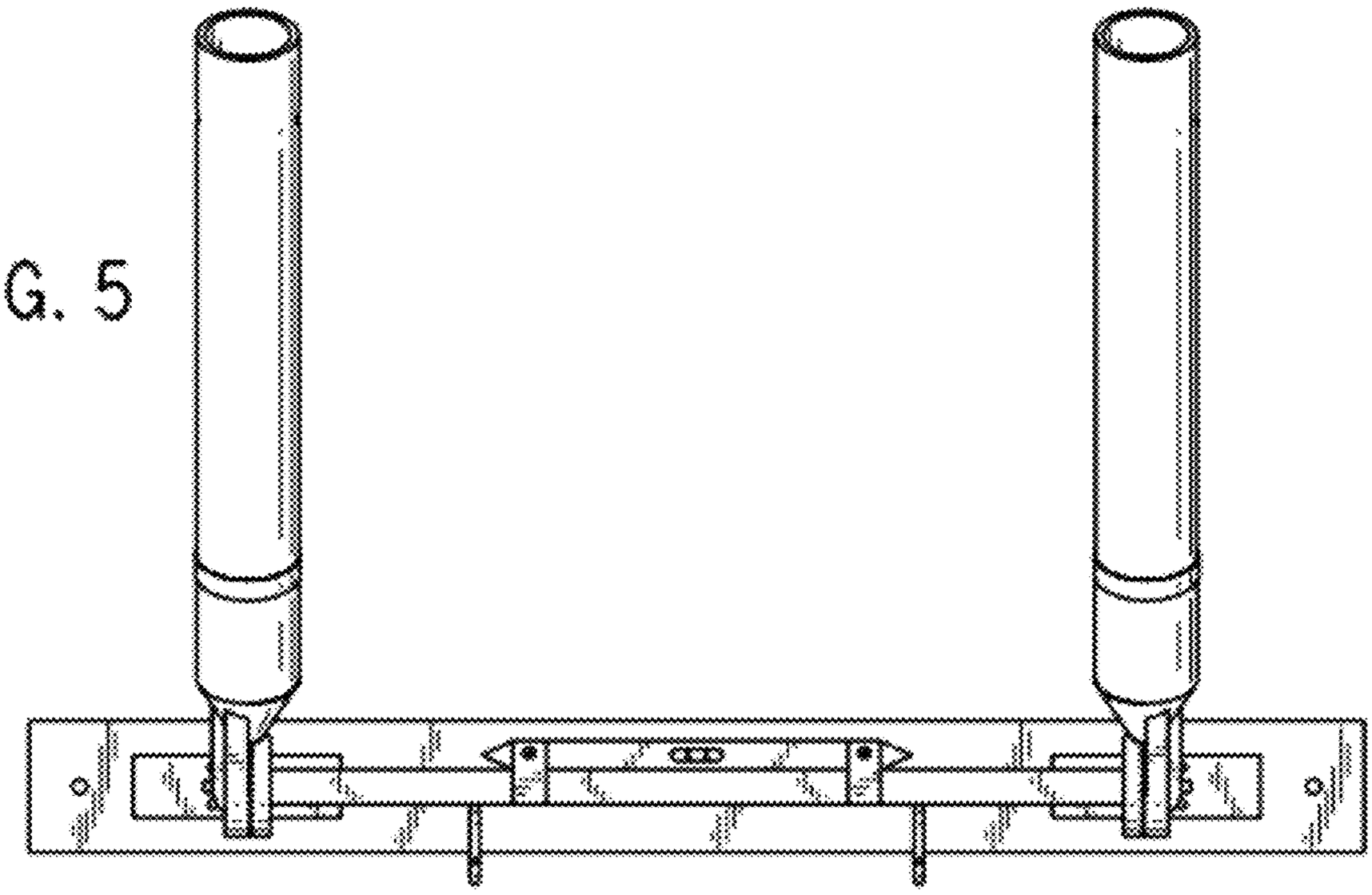
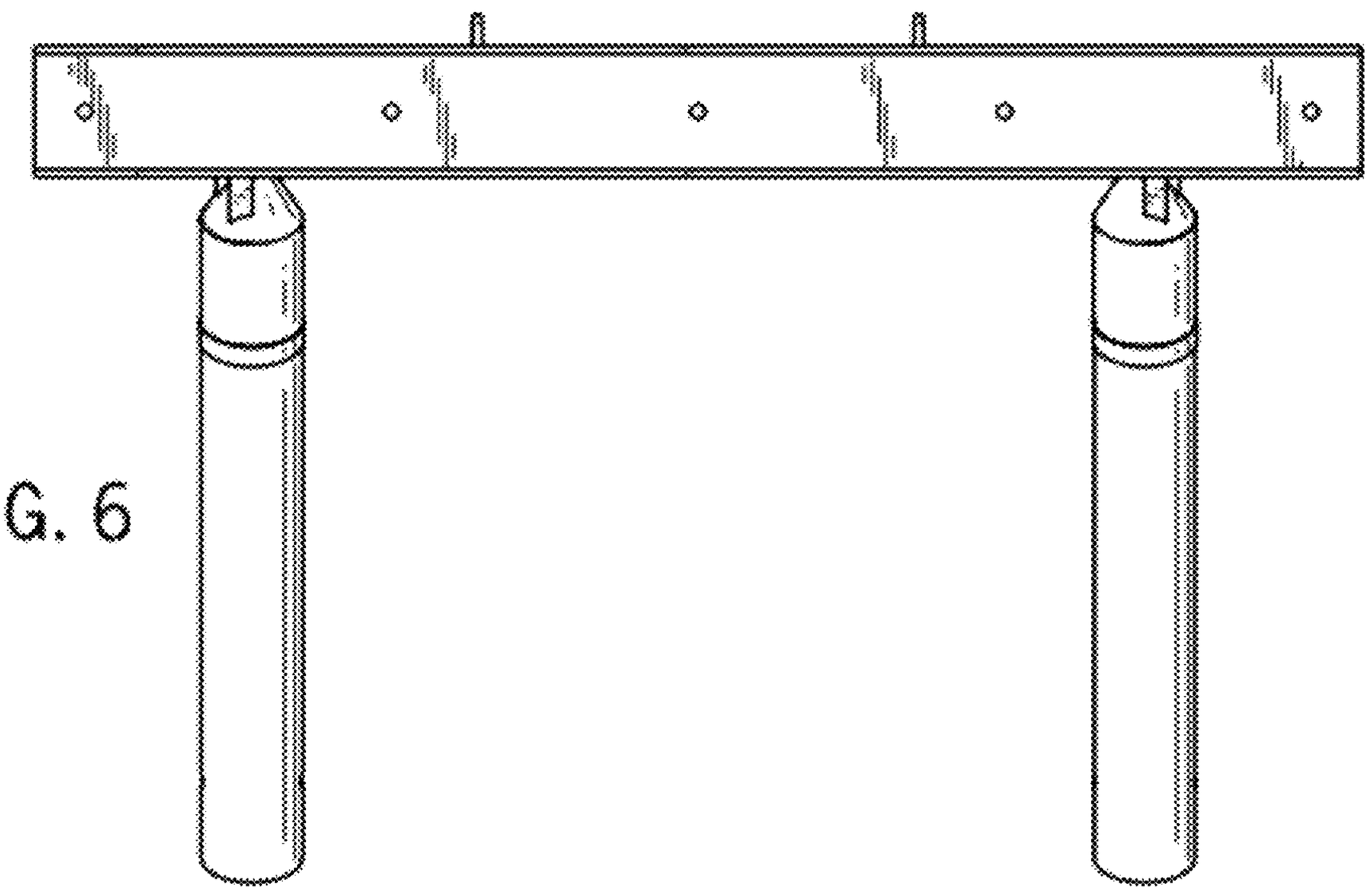
FIG. 6