US00D662639S

(12) United States Design Patent

Ng et al.

(10) Patent No.: US D662,639 S
(45) Date of Patent: ** Jun. 26, 2012

(54) **DESK LAMP**

(75) Inventors: **Kenneth Yat Chung Ng**, Arcadia, CA (US); **Edmund Yat Kwong Ng**, Temple City, CA (US); **Peter Ng**, Hong Kong (CN)

(73) Assignee: **Koncept Technologies Inc.**, Monrovia, CA (US)

(**) Term: **14 Years**

(21) Appl. No.: **29/391,029**

(22) Filed: **May 2, 2011**

(51) **LOC (9) Cl.** **26-05**

(52) **U.S. Cl.** **D26/65**

(58) **Field of Classification Search** D26/60–66, D26/93, 106–109, 102, 104, 118; 362/145, 362/153, 153.1, 217.02, 220, 223, 238, 240, 362/249.1, 249.01–249.03, 249.07, 249.09, 362/421, 427, 413, 269, 270, 274, 275, 277, 362/280–285, 287, 288, 311.02, 800, 555
See application file for complete search history.

(56) **References Cited**

U.S. PATENT DOCUMENTS

D486,938	S	*	2/2004	Waldmann	D26/60
D495,082	S	*	8/2004	Marchand	D26/65
D510,451	S	*	10/2005	Marchand	D26/65
D523,164	S	*	6/2006	Ng	D26/65
D574,530	S	*	8/2008	Tragatschnig	D26/61
D606,692	S	*	12/2009	Waldmann	D26/65
D620,165	S	*	7/2010	Huang	D26/63
D622,885	S	*	8/2010	Ng et al.	D26/65
D626,279	S	*	10/2010	Watson et al.	D26/93
D635,707	S	*	4/2011	Ng et al.	D26/65
2007/0247860	A1	*	10/2007	Franklin et al.	362/431

OTHER PUBLICATIONS

(2002-2008),HL1001 i-bar High Power LED Desk Lamp, About Koncept Technologies, www.konceptech.com/productimages.html.

* cited by examiner

Primary Examiner — Susan M Lee
Assistant Examiner — Linda G. Brooks
(74) *Attorney, Agent, or Firm* — Foley & Lardner LLP

(57) **CLAIM**

We claim the ornamental design for a desk lamp, as shown and described.

DESCRIPTION

FIG. **1** is a perspective view of a desk lamp according to the claimed design;
FIG. **2** is an enlarged detail of the bottom, right-side perspective view of the desk lamp in FIG. **1**;
FIG. **3** is a left side view of a desk lamp according to the claimed design;
FIG. **4** is a right side view of a desk lamp according to the claimed design;
FIG. **5** is a front view of a desk lamp according to the claimed design;
FIG. **6** is a back view of a desk lamp according to the claimed design;
FIG. **7** is a top view of a desk lamp according to the claimed design; and,
FIG. **8** is a bottom view of a desk lamp according to the claimed design.
The design has been shown broken away to indicate that no particular length is claimed. The portions of the desk lamp shown in broken lines form no part of the claimed design.

1 Claim, 8 Drawing Sheets

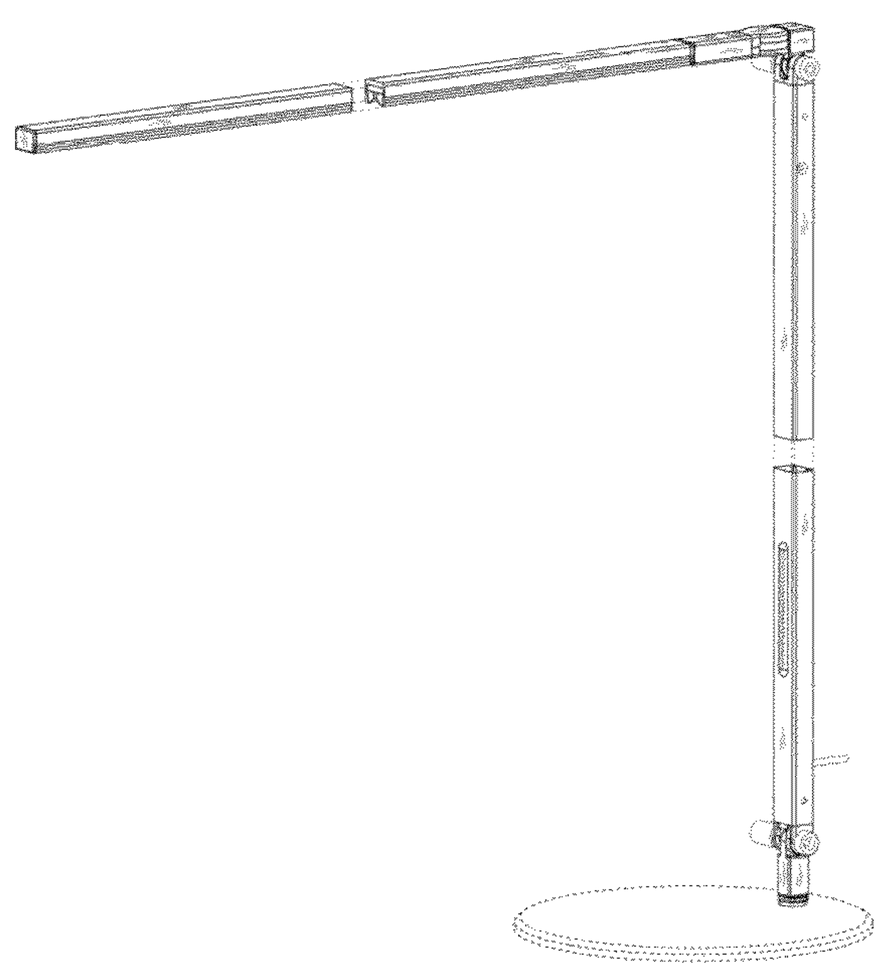

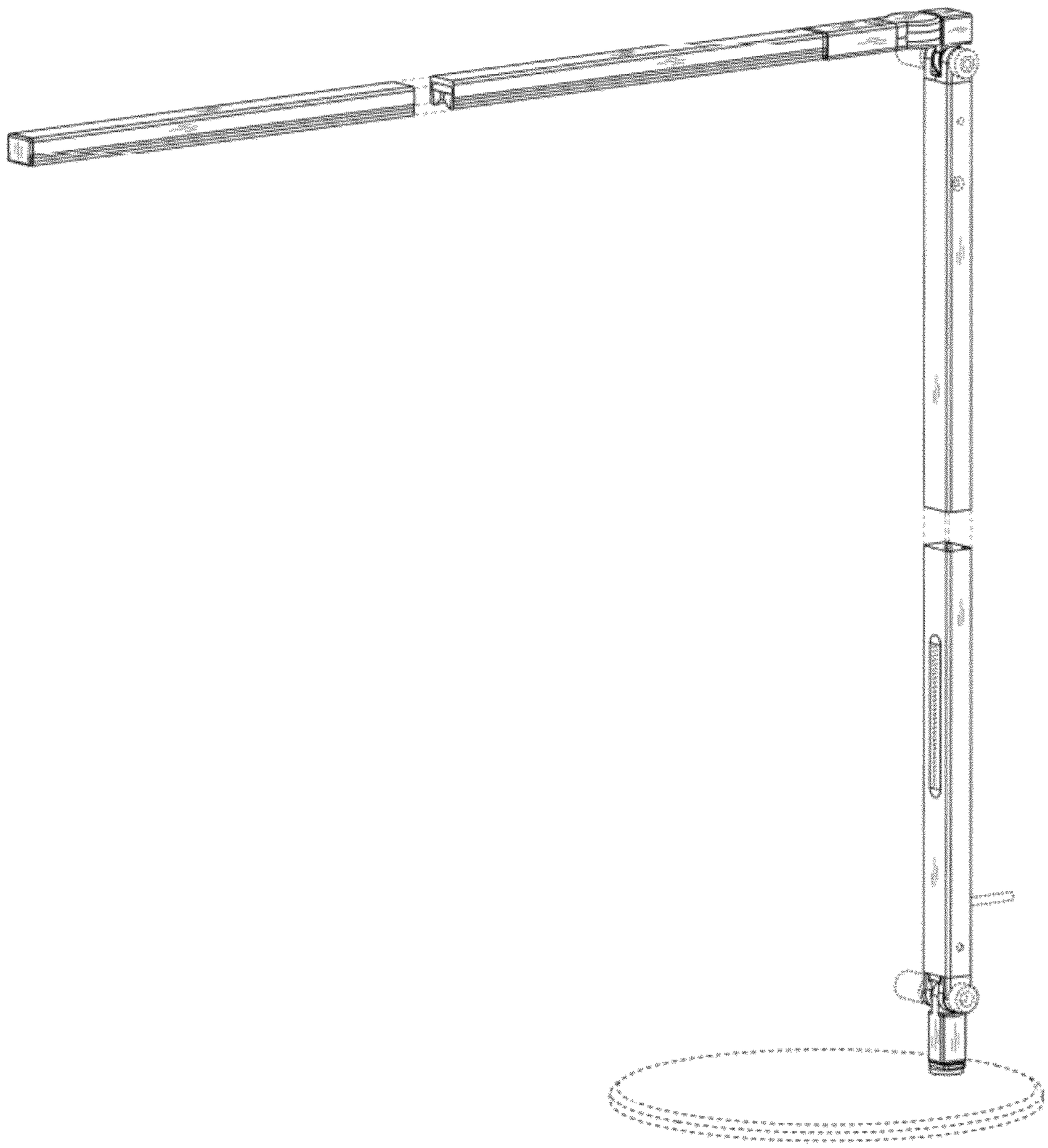

FIG. 1

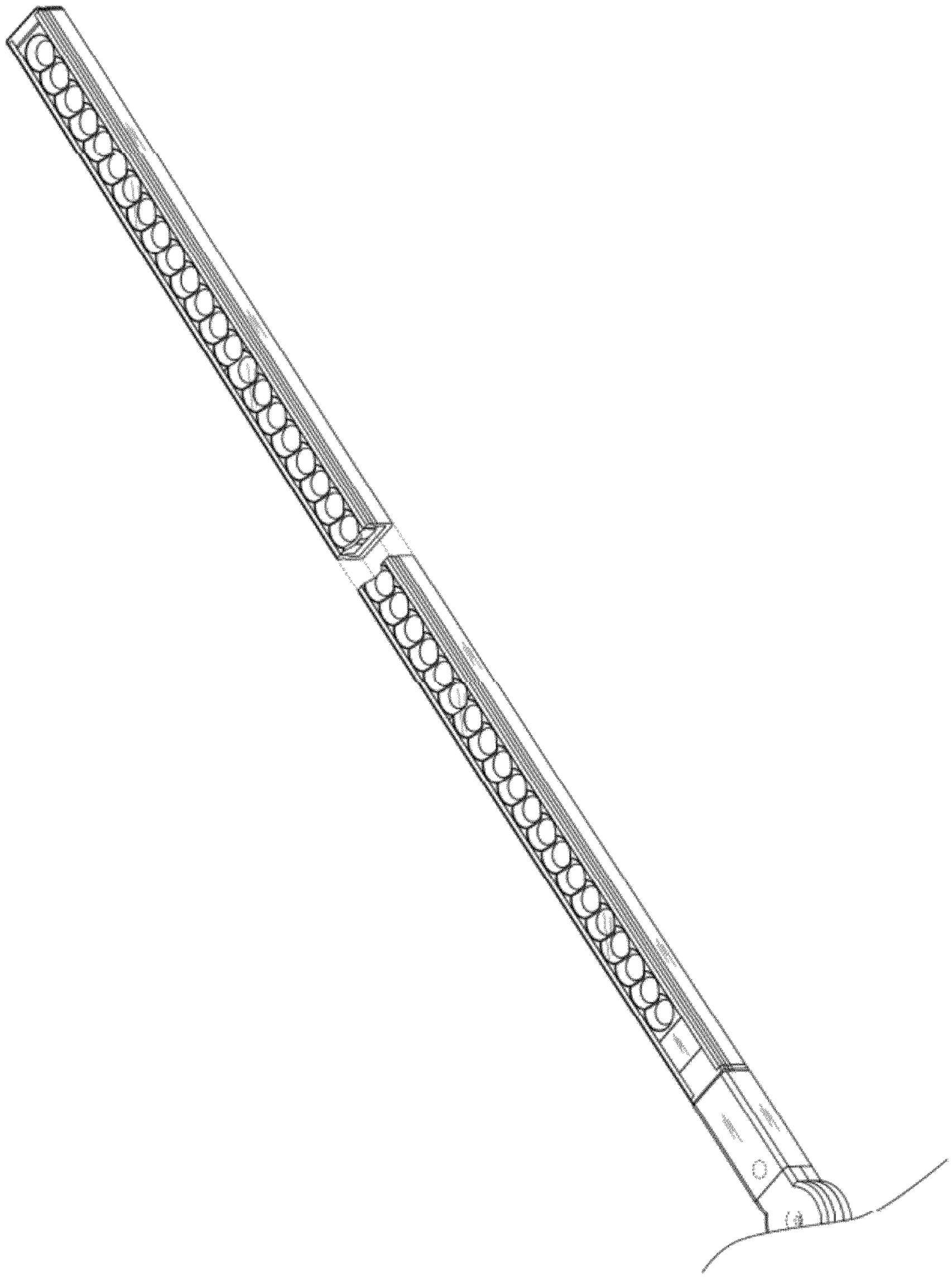

FIG. 2

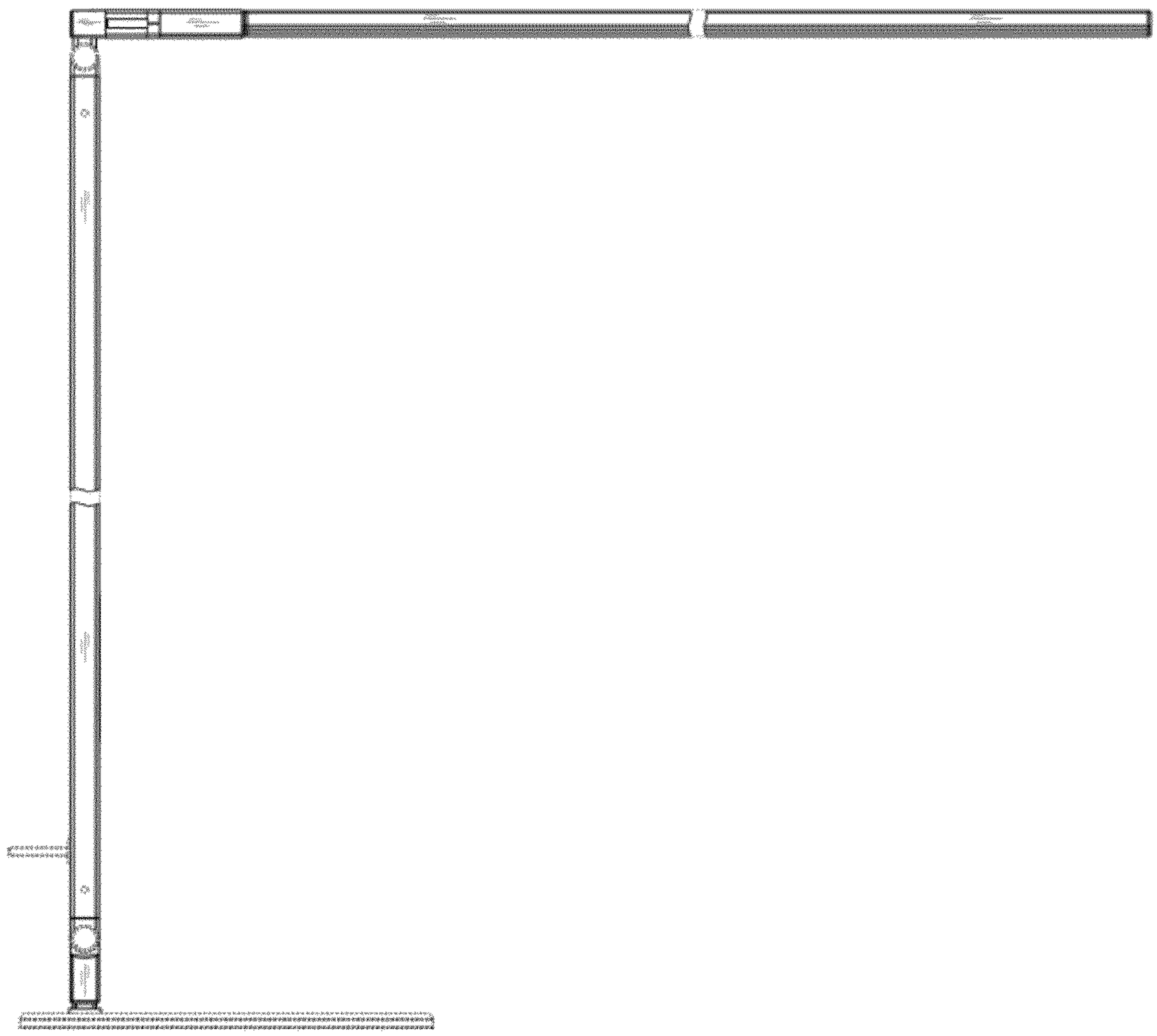

FIG. 3

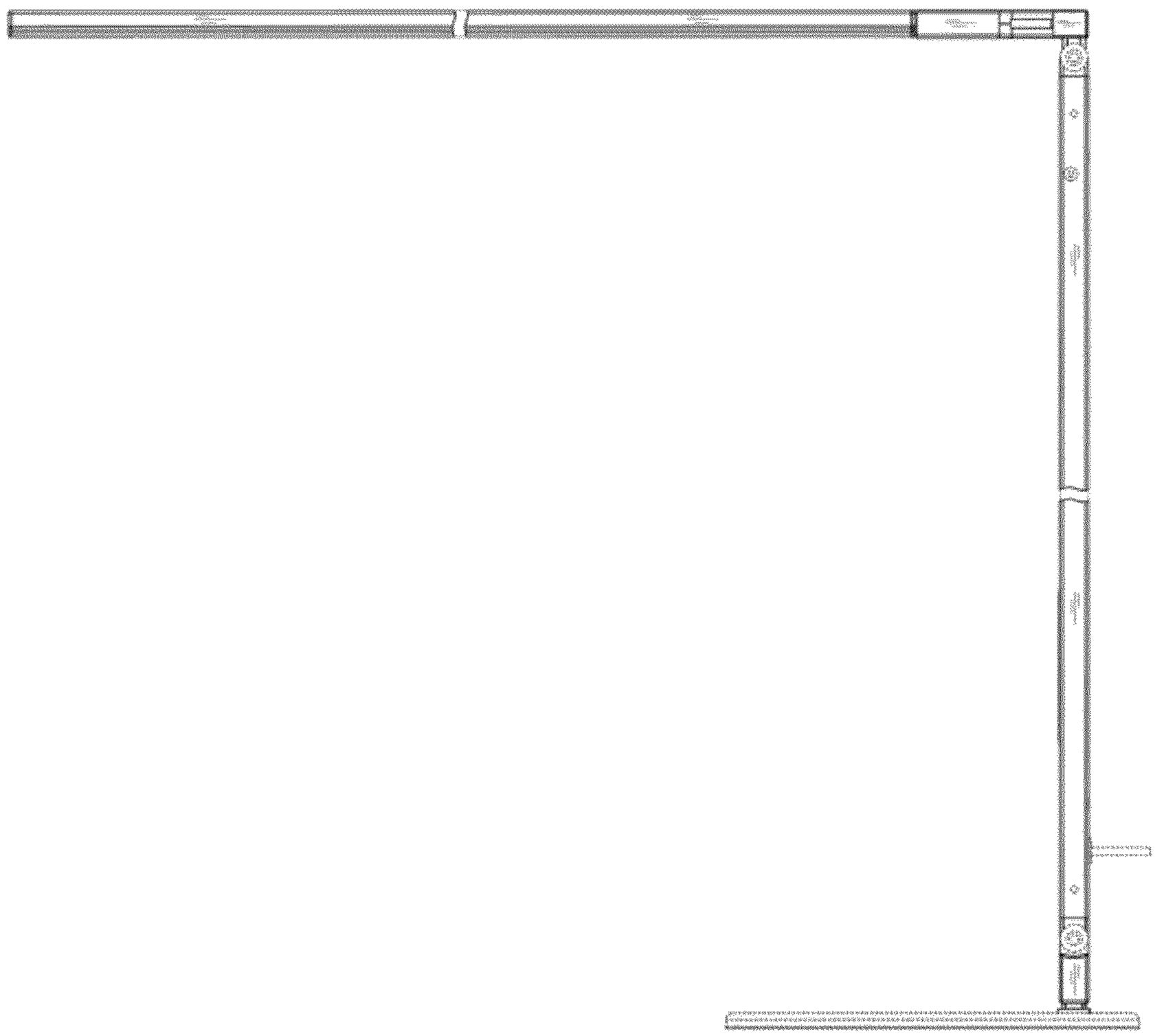

FIG. 4

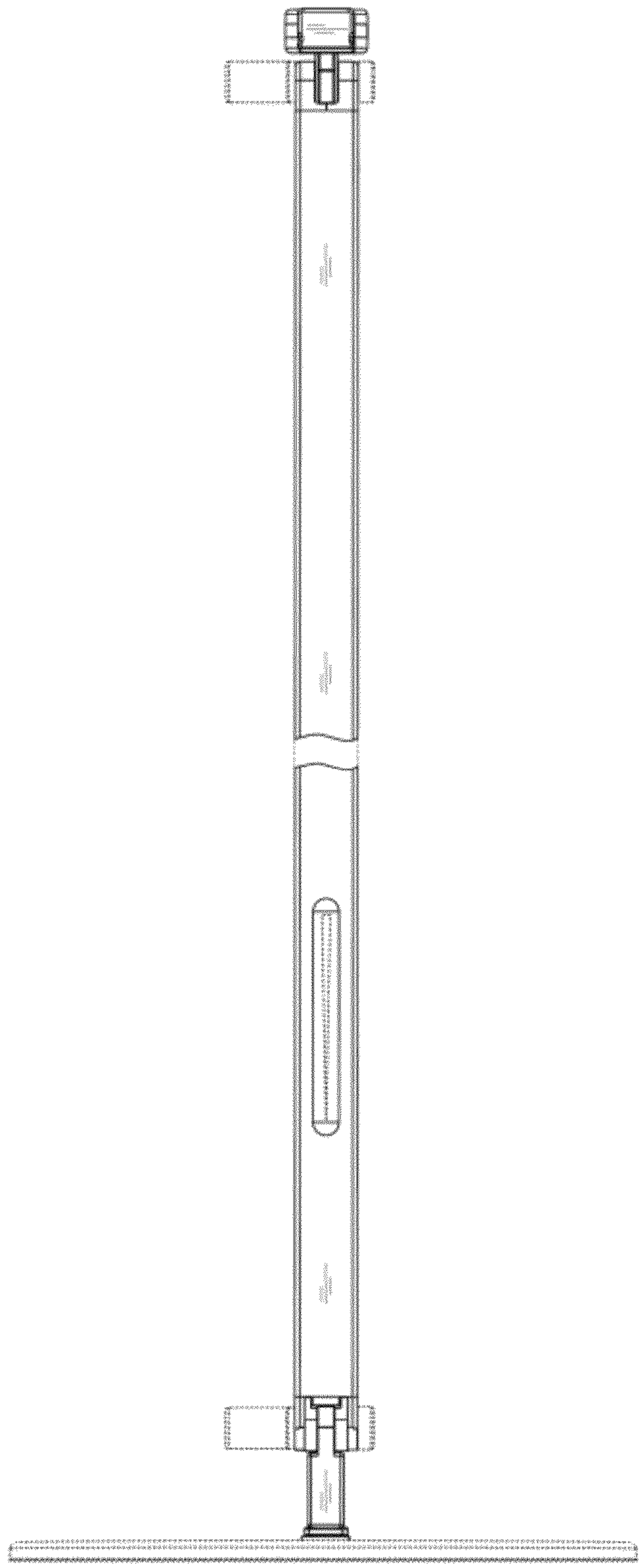

FIG. 5

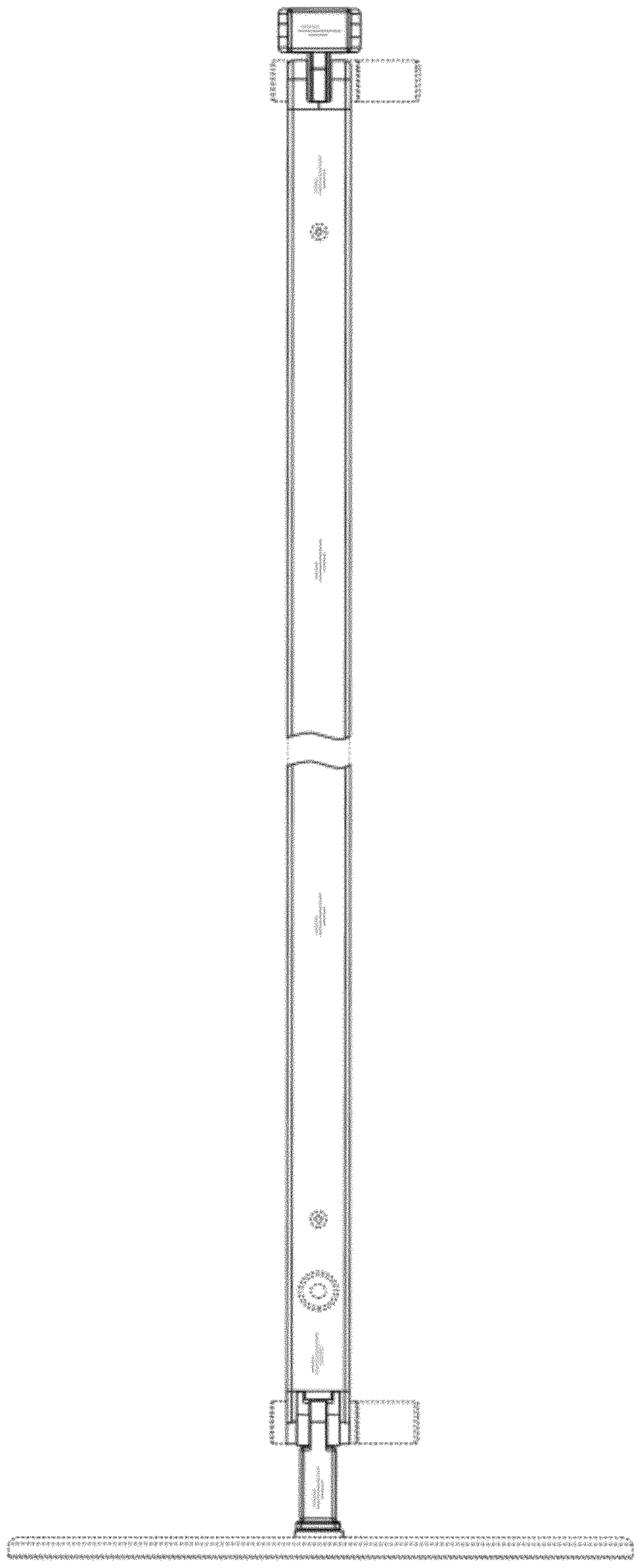

FIG. 6

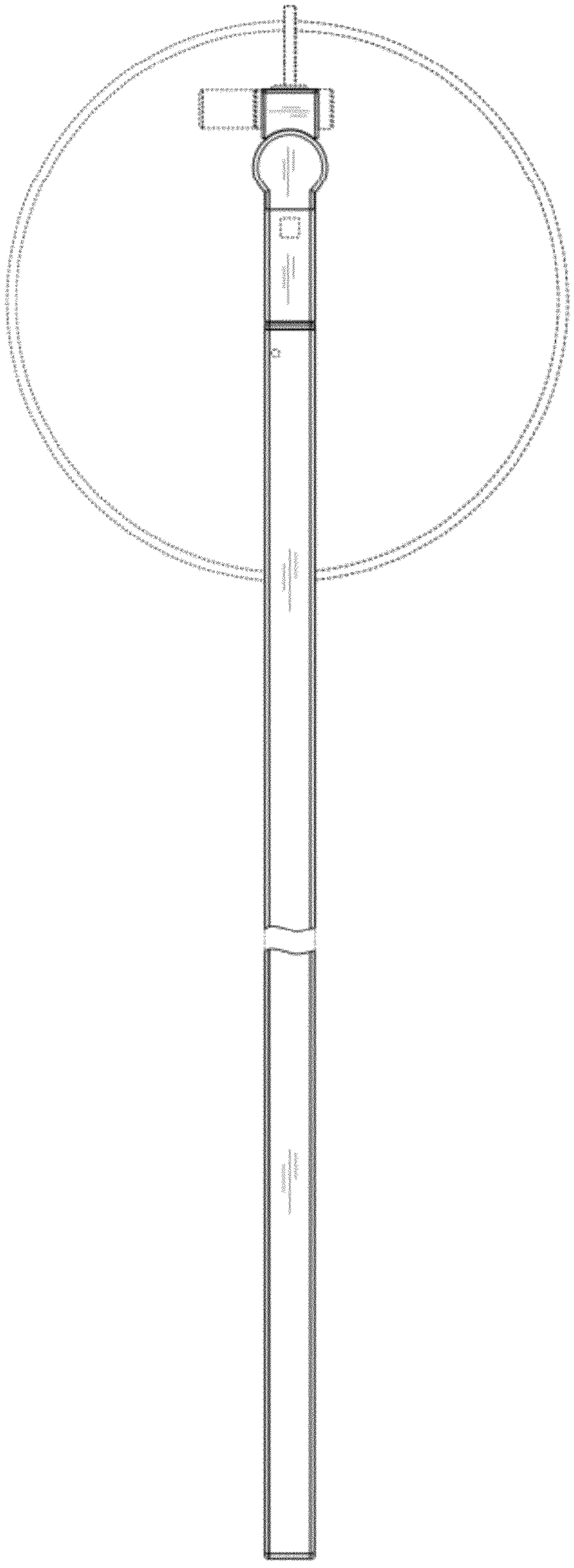

FIG. 7

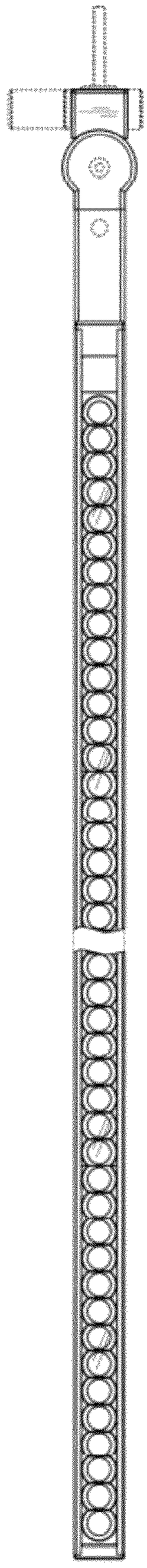

FIG. 8