US00D661804S

(12) United States Design Patent
Price et al.

(10) Patent No.: US D661,804 S
(45) Date of Patent: ** Jun. 12, 2012

(54) **USER INTERFACE FOR A SURGICAL INSTRUMENT**

(75) Inventors: **Daniel W. Price**, Loveland, OH (US); **Galen C. Robertson**, Apex, NC (US); **Cory G. Kimball**, Cincinnati, OH (US); **Scott A. Woodruff**, Boston, MA (US); **Matthew C. Miller**, Cincinnati, OH (US); **Carrie I. Fihe**, Ponte Vedra Beach, FL (US); **Carl J. Draginoff, Jr.**, Mason, OH (US)

(73) Assignee: **Ethicon Endo-Surgery, Inc.**, Cincinnati, OH (US)

(**) Term: **14 Years**

(21) Appl. No.: **29/402,701**

(22) Filed: **Sep. 26, 2011**

Related U.S. Application Data

(63) Continuation of application No. 12/245,158, filed on Oct. 3, 2008.

(51) **LOC (9) Cl.** **24-02**
(52) **U.S. Cl.** **D24/145**; D24/133
(58) **Field of Classification Search** D24/133, D24/143–149; 606/1, 45, 52, 51, 142–145, 606/167, 170–171, 205–207, 34
See application file for complete search history.

(56) **References Cited**

U.S. PATENT DOCUMENTS

2,736,960	A	3/1956	Armstrong
2,849,788	A	9/1958	Creek
3,015,961	A	1/1962	Roney
3,513,848	A	5/1970	Winston et al.
3,526,219	A	9/1970	Balamuth
3,614,484	A	10/1971	Shoh
3,636,943	A	1/1972	Balamuth
3,776,238	A	12/1973	Peyman et al.
3,805,787	A	4/1974	Banko
3,862,630	A	1/1975	Balamuth
3,900,823	A	8/1975	Sokal et al.
3,918,442	A	11/1975	Nikolaev et al.
3,946,738	A	3/1976	Newton et al.
3,955,859	A	5/1976	Stella et al.
3,956,826	A	5/1976	Perdreaux, Jr.
4,156,187	A	5/1979	Murry et al.
4,188,927	A	2/1980	Harris
4,200,106	A	4/1980	Douvas et al.
4,445,063	A	4/1984	Smith
4,491,132	A	1/1985	Aikins

(Continued)

FOREIGN PATENT DOCUMENTS

CN 1634601 A 7/2005

(Continued)

OTHER PUBLICATIONS

Partial International Search Report for PCT/US2008/078645, Mar. 10, 2009 (2 pages).

(Continued)

Primary Examiner — Wan Laymon
(74) *Attorney, Agent, or Firm* — Verne E. Kreger, Jr.

(57) **CLAIM**

The ornamental design for a user interface for a surgical instrument, as shown and described.

DESCRIPTION

FIG. **1** is a left perspective view of a user interface for a surgical instrument showing our design.
FIG. **2** is a left side view thereof.
FIG. **3** is a right side view thereof.
FIG. **4** is a top view thereof.
FIG. **5** is a bottom view thereof.
FIG. **6** is a front view thereof; and,
FIG. **7** is a rear view thereof.
Portions of the user interface for a surgical instrument shown in broken lines form no part of the claimed design.

1 Claim, 4 Drawing Sheets

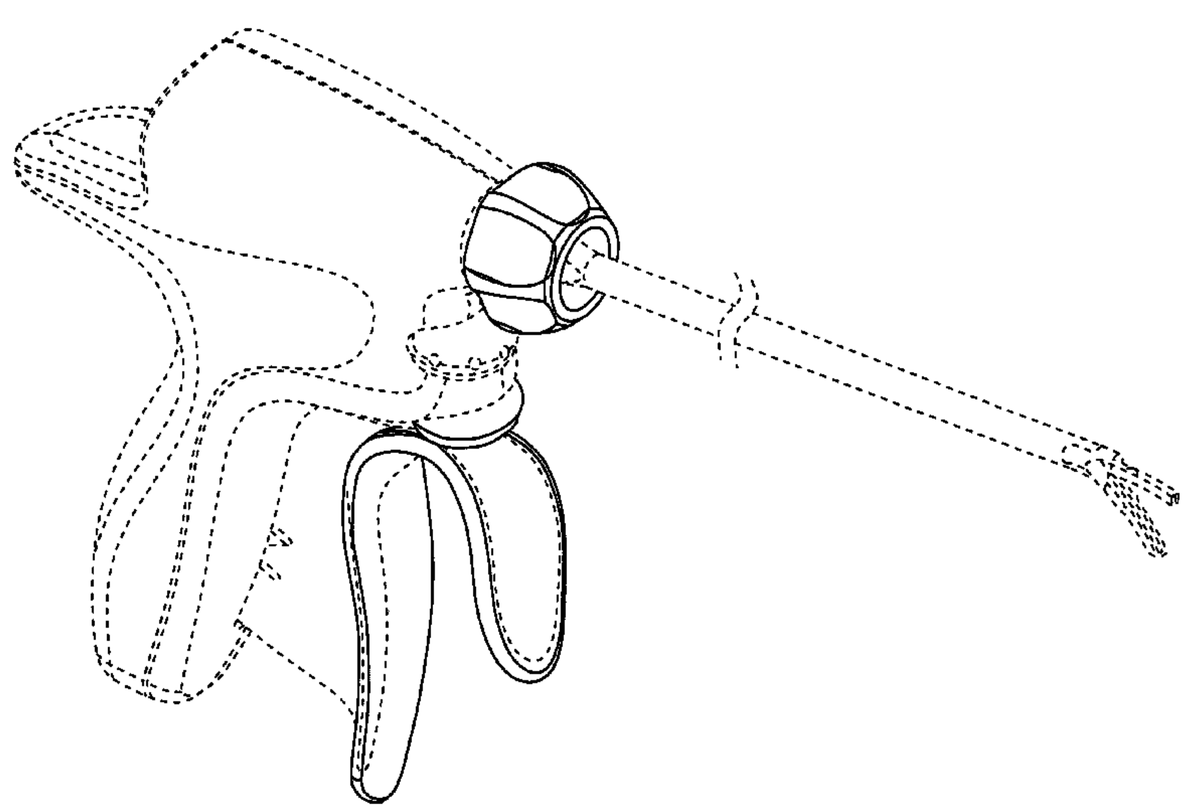

U.S. PATENT DOCUMENTS

4,574,615 A 3/1986 Bower et al.
4,617,927 A 10/1986 Manes
4,633,119 A 12/1986 Thompson
4,634,420 A 1/1987 Spinosa et al.
4,640,279 A 2/1987 Beard
4,708,127 A 11/1987 Abdelghani
4,712,722 A 12/1987 Hood et al.
4,827,911 A 5/1989 Broadwin et al.
4,832,683 A 5/1989 Idemoto et al.
4,838,853 A 6/1989 Parisi
4,850,354 A 7/1989 McGurk-Burleson et al.
4,865,159 A 9/1989 Jamison
4,896,009 A 1/1990 Pawlowski
4,922,902 A 5/1990 Wuchinich et al.
4,965,532 A 10/1990 Sakurai
4,981,756 A 1/1991 Rhandhawa
5,026,387 A 6/1991 Thomas
5,112,300 A 5/1992 Ureche
5,123,903 A 6/1992 Quaid et al.
5,126,618 A 6/1992 Takahashi et al.
5,162,044 A 11/1992 Gahn et al.
5,167,725 A 12/1992 Clark et al.
D332,660 S 1/1993 Rawson et al.
5,176,695 A 1/1993 Dulebohn
5,184,605 A 2/1993 Grezeszykowski
5,213,569 A 5/1993 Davis
5,221,282 A 6/1993 Wuchinich
5,226,910 A 7/1993 Kajiyama et al.
5,241,236 A 8/1993 Sasaki et al.
5,257,988 A 11/1993 L'Esperance, Jr.
5,261,922 A 11/1993 Hood
5,263,957 A 11/1993 Davison
5,275,609 A 1/1994 Pingleton et al.
5,282,800 A 2/1994 Foshee et al.
5,304,115 A 4/1994 Pflueger et al.
D347,474 S 5/1994 Olson
5,322,055 A 6/1994 Davison et al.
5,324,299 A 6/1994 Davison et al.
5,344,420 A 9/1994 Hilal et al.
5,346,502 A 9/1994 Estabrook et al.
5,366,466 A 11/1994 Christian et al.
D354,564 S 1/1995 Medema
5,381,067 A 1/1995 Greenstein et al.
5,403,312 A 4/1995 Yates et al.
5,411,481 A 5/1995 Allen et al.
5,419,761 A 5/1995 Narayanan et al.
5,421,829 A 6/1995 Olichney et al.
5,449,370 A 9/1995 Vaitekunas
5,483,501 A 1/1996 Park et al.
5,486,162 A 1/1996 Brumbach
5,500,216 A 3/1996 Julian et al.
5,501,654 A 3/1996 Failla et al.
5,505,693 A 4/1996 Mackool
5,562,609 A 10/1996 Brumbach
5,562,610 A 10/1996 Brumbach
5,601,601 A 2/1997 Tal et al.
5,607,436 A 3/1997 Pratt et al.
5,618,492 A 4/1997 Auten et al.
5,628,760 A 5/1997 Knoepfler
5,630,420 A 5/1997 Vaitekunas
D381,077 S 7/1997 Hunt
5,651,780 A 7/1997 Jackson et al.
5,653,713 A 8/1997 Michelson
5,669,922 A 9/1997 Hood
5,674,235 A 10/1997 Parisi
5,690,269 A 11/1997 Bolanos et al.
5,694,936 A 12/1997 Fujimoto et al.
5,713,896 A 2/1998 Nardella
5,733,074 A 3/1998 Stöck et al.
5,741,226 A 4/1998 Strukel et al.
5,810,859 A 9/1998 DiMatteo et al.
5,827,323 A 10/1998 Klieman et al.
5,828,160 A 10/1998 Sugishita
5,843,109 A 12/1998 Mehta et al.
5,879,364 A 3/1999 Bromfield et al.
5,893,835 A 4/1999 Witt et al.
5,897,569 A 4/1999 Kellogg et al.
5,935,143 A 8/1999 Hood
5,935,144 A 8/1999 Estabrook
5,938,633 A 8/1999 Beaupre
5,944,718 A 8/1999 Austin et al.
5,944,737 A 8/1999 Tsonton et al.
5,954,736 A 9/1999 Bishop et al.
5,954,746 A 9/1999 Holthaus et al.
5,957,882 A 9/1999 Nita et al.
5,957,943 A 9/1999 Vaitekunas
5,968,007 A 10/1999 Simon et al.
5,968,060 A 10/1999 Kellogg
D416,089 S 11/1999 Barton et al.
5,980,510 A 11/1999 Tsonton et al.
5,989,274 A 11/1999 Davison et al.
5,989,275 A 11/1999 Estabrook et al.
5,993,972 A 11/1999 Reich et al.
6,024,741 A 2/2000 Williamson, IV et al.
6,033,375 A 3/2000 Brumbach
6,063,098 A 5/2000 Houser et al.
6,066,132 A 5/2000 Chen et al.
6,068,647 A 5/2000 Witt et al.
6,077,285 A 6/2000 Boukhny
6,083,191 A 7/2000 Rose
6,086,584 A 7/2000 Miller
6,090,120 A 7/2000 Wright et al.
6,109,500 A 8/2000 Alli et al.
6,110,127 A 8/2000 Suzuki
6,113,594 A 9/2000 Savage
6,139,320 A 10/2000 Hahn
6,152,902 A 11/2000 Christian et al.
6,159,160 A 12/2000 Hsei et al.
6,159,175 A 12/2000 Strukel et al.
6,204,592 B1 3/2001 Hur
6,206,844 B1 3/2001 Reichel et al.
6,210,403 B1 4/2001 Klicek
6,214,023 B1 4/2001 Whipple et al.
6,233,476 B1 5/2001 Strommer et al.
6,238,366 B1 5/2001 Savage et al.
D444,365 S 7/2001 Bass et al.
6,254,623 B1 7/2001 Haibel, Jr. et al.
6,258,034 B1 7/2001 Hanafy
6,267,761 B1 7/2001 Ryan
6,270,831 B2 8/2001 Kumar et al.
6,273,852 B1 8/2001 Lehe et al.
6,274,963 B1 8/2001 Estabrook et al.
6,277,115 B1 8/2001 Saadat
6,278,218 B1 8/2001 Madan et al.
6,283,981 B1 9/2001 Beaupre
6,309,400 B2 10/2001 Beaupre
6,319,221 B1 11/2001 Savage et al.
6,325,811 B1 12/2001 Messerly
6,328,751 B1 12/2001 Beaupre
6,352,532 B1 3/2002 Kramer et al.
6,379,320 B1 4/2002 Lafon et al.
D457,958 S * 5/2002 Dycus et al. D24/144
6,383,194 B1 5/2002 Pothula
6,387,109 B1 5/2002 Davison et al.
6,388,657 B1 5/2002 Natoli
6,391,042 B1 5/2002 Cimino
6,405,733 B1 6/2002 Fogarty et al.
6,416,486 B1 7/2002 Wampler
6,423,073 B2 7/2002 Bowman
6,423,082 B1 7/2002 Houser et al.
6,432,118 B1 8/2002 Messerly
6,436,114 B1 8/2002 Novak et al.
6,436,115 B1 8/2002 Beaupre
6,443,969 B1 9/2002 Novak et al.
6,454,781 B1 9/2002 Witt et al.
6,454,782 B1 9/2002 Schwemberger
6,458,142 B1 10/2002 Faller et al.
6,480,796 B2 11/2002 Wiener
6,485,490 B2 11/2002 Wampler et al.
6,491,708 B2 12/2002 Madan et al.
6,497,715 B2 12/2002 Satou
6,500,176 B1 12/2002 Truckai et al.
6,500,188 B2 12/2002 Harper et al.
6,524,316 B1 2/2003 Nicholson et al.
6,533,784 B2 3/2003 Truckai et al.
6,537,291 B2 3/2003 Friedman et al.
6,543,452 B1 4/2003 Lavigne

6,543,456 B1 4/2003 Freeman
6,544,260 B1 4/2003 Markel et al.
6,561,983 B2 5/2003 Cronin et al.
6,572,632 B2 6/2003 Zisterer et al.
6,575,969 B1 6/2003 Rittman, III et al.
6,582,451 B1 6/2003 Marucci et al.
6,589,200 B1 7/2003 Schwemberger et al.
6,589,239 B2 7/2003 Khandkar et al.
6,616,450 B2 9/2003 Mossle et al.
6,623,501 B2 9/2003 Heller et al.
6,626,926 B2 9/2003 Friedman et al.
6,633,234 B2 10/2003 Wiener et al.
6,656,177 B2 12/2003 Truckai et al.
6,662,127 B2 12/2003 Wiener et al.
6,663,941 B2 12/2003 Brown et al.
6,676,660 B2 1/2004 Wampler et al.
6,678,621 B2 1/2004 Wiener et al.
6,679,899 B2 1/2004 Wiener et al.
6,682,544 B2 1/2004 Mastri et al.
6,716,215 B1 4/2004 David et al.
6,731,047 B2 5/2004 Kauf et al.
6,733,506 B1 5/2004 McDevitt et al.
6,762,535 B2 7/2004 Take et al.
6,770,072 B1 8/2004 Truckai et al.
6,773,444 B2 8/2004 Messerly
6,786,382 B1 9/2004 Hoffman
6,786,383 B2 9/2004 Stegelmann
6,790,216 B1 9/2004 Ishikawa
6,802,843 B2 10/2004 Truckai et al.
6,828,712 B2 12/2004 Battaglin et al.
6,869,439 B2 3/2005 White et al.
6,875,220 B2 4/2005 Du et al.
6,905,497 B2 6/2005 Truckai et al.
6,908,472 B2 6/2005 Wiener et al.
6,913,579 B2 7/2005 Truckai et al.
6,926,716 B2 8/2005 Baker et al.
6,929,632 B2 8/2005 Nita et al.
6,929,644 B2 8/2005 Truckai et al.
D509,589 S 9/2005 Wells
6,945,981 B2 9/2005 Donofrio et al.
D511,145 S 11/2005 Donofrio et al.
6,976,844 B2 12/2005 Hickok et al.
6,976,969 B2 12/2005 Messerly
6,977,495 B2 12/2005 Donofrio
6,984,220 B2 1/2006 Wuchinich
7,011,657 B2 3/2006 Truckai et al.
7,041,083 B2 5/2006 Chu et al.
7,041,088 B2 5/2006 Nawrocki et al.
7,041,102 B2 5/2006 Truckai et al.
7,070,597 B2 7/2006 Truckai et al.
7,074,219 B2 7/2006 Levine et al.
7,077,039 B2 7/2006 Gass et al.
7,077,853 B2 7/2006 Kramer et al.
7,083,619 B2 8/2006 Truckai et al.
7,087,054 B2 8/2006 Truckai et al.
7,108,695 B2 9/2006 Witt et al.
7,112,201 B2 9/2006 Truckai et al.
7,118,564 B2 10/2006 Ritchie et al.
7,124,932 B2 10/2006 Isaacson et al.
7,125,409 B2 10/2006 Truckai et al.
7,135,018 B2 11/2006 Ryan et al.
7,135,030 B2 11/2006 Schwemberger et al.
7,153,315 B2 12/2006 Miller
D536,093 S * 1/2007 Nakajima et al. D24/138
7,156,189 B1 1/2007 Bar-Cohen et al.
7,156,853 B2 1/2007 Muratsu
7,157,058 B2 1/2007 Marhasin et al.
7,159,750 B2 1/2007 Racenet et al.
7,163,548 B2 1/2007 Stulen et al.
7,169,146 B2 1/2007 Truckai et al.
7,179,271 B2 2/2007 Friedman et al.
7,186,253 B2 3/2007 Truckai et al.
7,189,233 B2 3/2007 Truckai et al.
7,204,820 B2 4/2007 Akahoshi
7,220,951 B2 5/2007 Truckai et al.
7,223,229 B2 5/2007 Inman et al.
7,229,455 B2 6/2007 Sakurai et al.
7,273,483 B2 9/2007 Wiener et al.
7,309,849 B2 12/2007 Truckai et al.
7,311,709 B2 12/2007 Truckai et al.
7,317,955 B2 1/2008 McGreevy
7,326,236 B2 2/2008 Andreas et al.
7,331,410 B2 2/2008 Yong et al.
7,353,068 B2 4/2008 Tanaka et al.
7,354,440 B2 4/2008 Truckai et al.
7,380,695 B2 6/2008 Doll et al.
7,381,209 B2 6/2008 Truckai et al.
7,390,317 B2 6/2008 Taylor et al.
7,408,288 B2 8/2008 Hara
D576,725 S 9/2008 Shumer et al.
D578,643 S 10/2008 Shumer et al.
D578,644 S 10/2008 Shumer et al.
D578,645 S 10/2008 Shumer et al.
7,431,704 B2 10/2008 Babaev
7,472,815 B2 1/2009 Shelton, IV et al.
7,479,148 B2 1/2009 Beaupre
7,479,160 B2 1/2009 Branch et al.
7,494,468 B2 2/2009 Rabiner et al.
7,503,893 B2 3/2009 Kucklick
7,534,243 B1 5/2009 Chin et al.
D594,983 S * 6/2009 Price et al. D24/145
7,567,012 B2 7/2009 Namikawa
D618,797 S 6/2010 Price et al.
7,751,115 B2 7/2010 Song
7,770,774 B2 8/2010 Mastri et al.
7,780,659 B2 8/2010 Okada et al.
D631,155 S * 1/2011 Peine et al. D24/133
7,876,030 B2 1/2011 Taki et al.
D631,965 S * 2/2011 Price et al. D24/145
7,892,606 B2 2/2011 Thies et al.
7,901,423 B2 3/2011 Stulen et al.
7,959,050 B2 6/2011 Smith et al.
7,959,626 B2 6/2011 Hong et al.
7,976,544 B2 7/2011 McClurken et al.
8,057,498 B2 11/2011 Robertson
8,058,771 B2 11/2011 Giordano et al.
2001/0025184 A1 9/2001 Messerly
2001/0031950 A1 10/2001 Ryan
2001/0039419 A1 11/2001 Francischelli et al.
2002/0002377 A1 1/2002 Cimino
2002/0019649 A1 2/2002 Sikora et al.
2002/0022836 A1 2/2002 Goble et al.
2002/0077550 A1 6/2002 Rabiner et al.
2002/0156493 A1 10/2002 Houser et al.
2003/0055443 A1 3/2003 Spotnitz
2003/0204199 A1 10/2003 Novak et al.
2003/0212332 A1 11/2003 Fenton et al.
2004/0030254 A1 2/2004 Babaev
2004/0047485 A1 3/2004 Sherrit et al.
2004/0092921 A1 5/2004 Kadziauskas et al.
2004/0097919 A1 5/2004 Wellman et al.
2004/0097996 A1 5/2004 Rabiner et al.
2004/0199193 A1 10/2004 Hayashi et al.
2004/0204728 A1 10/2004 Haefner
2004/0243157 A1 12/2004 Connor et al.
2004/0260300 A1 12/2004 Gorensek et al.
2005/0033337 A1 2/2005 Muir et al.
2005/0049546 A1 3/2005 Messerly et al.
2005/0143769 A1 6/2005 White et al.
2005/0149108 A1 7/2005 Cox
2005/0165345 A1 7/2005 Laufer et al.
2005/0177184 A1 8/2005 Easley
2005/0192610 A1 9/2005 Houser et al.
2005/0209620 A1 9/2005 Du et al.
2005/0261581 A1 11/2005 Hughes et al.
2005/0261588 A1 11/2005 Makin et al.
2005/0288659 A1 12/2005 Kimura et al.
2006/0030797 A1 2/2006 Zhou et al.
2006/0063130 A1 3/2006 Hayman et al.
2006/0079878 A1 4/2006 Houser
2006/0084963 A1 4/2006 Messerly
2006/0190034 A1 8/2006 Nishizawa et al.
2006/0211943 A1 9/2006 Beaupre
2006/0235306 A1 10/2006 Cotter et al.
2006/0253050 A1 11/2006 Yoshimine et al.
2007/0016235 A1 1/2007 Tanaka et al.
2007/0016236 A1 1/2007 Beaupre
2007/0055228 A1 3/2007 Berg et al.

2007/0060915	A1	3/2007	Kucklick	
2007/0063618	A1	3/2007	Bromfield	
2007/0129716	A1	6/2007	Daw et al.	
2007/0130771	A1	6/2007	Ehlert et al.	
2007/0131034	A1	6/2007	Ehlert et al.	
2007/0149881	A1	6/2007	Rabin	
2007/0162050	A1	7/2007	Sartor	
2007/0173872	A1	7/2007	Neuenfeldt	
2007/0185380	A1	8/2007	Kucklick	
2007/0219481	A1	9/2007	Babaev	
2007/0249941	A1	10/2007	Salehi et al.	
2007/0260234	A1	11/2007	McCullagh et al.	
2007/0265560	A1	11/2007	Soltani et al.	
2007/0275348	A1	11/2007	Lemon	
2007/0282335	A1	12/2007	Young et al.	
2007/0287933	A1	12/2007	Phan et al.	
2008/0009848	A1	1/2008	Paraschiv et al.	
2008/0058585	A1	3/2008	Novak et al.	
2008/0058775	A1	3/2008	Darian et al.	
2008/0058845	A1	3/2008	Shimizu et al.	
2008/0082039	A1	4/2008	Babaev	
2008/0082098	A1	4/2008	Tanaka et al.	
2008/0172051	A1	7/2008	Masuda et al.	
2008/0177268	A1	7/2008	Daum et al.	
2008/0188878	A1	8/2008	Young	
2008/0200940	A1	8/2008	Eichmann et al.	
2008/0208231	A1	8/2008	Ota et al.	
2008/0234708	A1	9/2008	Houser et al.	
2008/0234709	A1	9/2008	Houser	
2008/0234710	A1	9/2008	Neurohr et al.	
2008/0234711	A1	9/2008	Houser et al.	
2008/0262490	A1	10/2008	Williams	
2008/0281200	A1	11/2008	Voic et al.	
2008/0287948	A1	11/2008	Newton et al.	
2009/0030311	A1	1/2009	Stulen et al.	
2009/0030351	A1	1/2009	Wiener et al.	
2009/0030437	A1	1/2009	Houser et al.	
2009/0030438	A1	1/2009	Stulen	
2009/0030439	A1	1/2009	Stulen	
2009/0036911	A1	2/2009	Stulen	
2009/0036912	A1	2/2009	Wiener et al.	
2009/0036913	A1	2/2009	Wiener et al.	
2009/0036914	A1	2/2009	Houser	
2009/0076506	A1	3/2009	Baker	
2009/0082716	A1	3/2009	Akahoshi	
2009/0105750	A1 *	4/2009	Price et al.	606/206
2009/0118802	A1	5/2009	Mioduski et al.	
2009/0143806	A1	6/2009	Witt et al.	
2009/0270853	A1	10/2009	Yachi et al.	
2010/0036370	A1	2/2010	Mirel et al.	
2010/0036405	A1	2/2010	Giordano et al.	
2010/0158307	A1	6/2010	Kubota et al.	
2010/0179577	A1	7/2010	Houser	
2010/0187283	A1	7/2010	Crainich et al.	
2010/0298743	A1	11/2010	Nield et al.	
2010/0298851	A1	11/2010	Nield	
2010/0331869	A1	12/2010	Voegele et al.	
2010/0331870	A1	12/2010	Wan et al.	
2010/0331871	A1	12/2010	Nield et al.	
2010/0331872	A1	12/2010	Houser et al.	
2011/0009850	A1 *	1/2011	Main et al.	606/1
2011/0015627	A1	1/2011	DiNardo et al.	
2011/0015631	A1	1/2011	Wiener et al.	
2011/0015660	A1	1/2011	Wiener et al.	
2011/0082486	A1	4/2011	Messerly et al.	
2011/0087212	A1	4/2011	Aldridge et al.	
2011/0087213	A1	4/2011	Messerly et al.	
2011/0087214	A1	4/2011	Giordano et al.	
2011/0087215	A1	4/2011	Aldridge et al.	
2011/0087216	A1	4/2011	Aldridge et al.	
2011/0087217	A1	4/2011	Yates et al.	
2011/0087218	A1 *	4/2011	Boudreaux et al.	606/41
2011/0087256	A1	4/2011	Wiener et al.	
2011/0092972	A1 *	4/2011	Allen	606/45
2011/0125175	A1	5/2011	Stulen et al.	
2011/0196286	A1	8/2011	Robertson et al.	
2011/0196287	A1	8/2011	Robertson et al.	
2011/0196398	A1	8/2011	Robertson et al.	
2011/0196399	A1	8/2011	Robertson et al.	
2011/0196400	A1	8/2011	Robertson et al.	
2011/0196401	A1	8/2011	Robertson et al.	
2011/0196402	A1	8/2011	Robertson et al.	
2011/0196403	A1	8/2011	Robertson et al.	
2011/0196404	A1	8/2011	Dietz et al.	
2011/0196405	A1	8/2011	Dietz	
2011/0288452	A1	11/2011	Houser et al.	
2012/0029546	A1	2/2012	Robertson	

FOREIGN PATENT DOCUMENTS

CN	1640365	A	7/2005
CN	1694649	A	11/2005
CN	1922563	A	2/2007
CN	101040799	A	9/2007
EP	0171967	A2	2/1986
EP	0443256	A1	8/1991
EP	0456470	A1	11/1991
EP	0482195	B1	1/1996
EP	0612570	B1	6/1997
EP	0908148	B1	1/2002
EP	0908155	B1	6/2003
EP	1199044	B1	12/2005
EP	1844720	A1	10/2007
EP	1862133	A1	12/2007
EP	1974771	A1	10/2008
EP	1832259	B1	6/2009
EP	2074959	A1	7/2009
GB	2032221	A	4/1980
GB	2447767	B	8/2011
WO	WO 92/22259	A2	12/1992
WO	WO 93/14708	A1	8/1993
WO	WO 98/37815	A1	9/1998
WO	WO 01/54590	A1	8/2001
WO	WO 2005/122917	A1	12/2005
WO	WO 2006/042210	A2	4/2006
WO	WO 2006/058223	A2	6/2006
WO	WO 2006/129465	A1	12/2006
WO	WO 2007/047531	A2	4/2007
WO	WO 2007/143665	A2	12/2007
WO	WO 2008/016886	A2	2/2008
WO	WO 2008/130793	A1	10/2008
WO	WO 2009/018406	A2	2/2009
WO	WO 2009/027065	A1	3/2009

OTHER PUBLICATIONS

International Preliminary Report on Patentability for PCT/US2008/078645, Apr. 15, 2010 (9 pages).

U.S. Appl. No. 29/402,697, filed Sep. 26, 2011.

U.S. Appl. No. 29/402,699, filed Sep. 26, 2011.

U.S. Appl. No. 29/402,700, filed Sep. 26, 2011.

U.S. Appl. No. 29/404,676, filed Oct. 24, 2011.

U.S. Appl. No. 13/296,829, filed Nov. 15, 2011.

Technology Overview, printed from www.harmonicscalpel.com, Internet site, website accessed on Jun. 13, 2007, (3 pages).

Sherrit et al., "Novel Horn Designs for Ultrasonic/Sonic Cleaning Welding, Soldering, Cutting and Drilling," Proc. SPIE Smart Structures Conference, vol. 4701, Paper No. 34, San Diego, CA, pp. 353-360, Mar. 2002.

AST Products, Inc., "Principles of Video Contact Angle Analysis," 20 pages, (2006).

Lim et al., "A Review of Mechanism Used in Laparoscopic Surgical Instruments," Mechanism and Machine Theory, vol. 38, pp. 1133-1147, (2003).

Gooch et al., "Recommended Infection-Control Practices for Dentistry, 1993," Published: May 28, 1993; [retrieved on Aug. 23, 2008]. Retrieved from the internet: URL: http//wonder.cdc.gov/wonder/prevguid/p0000191/p0000191.asp (15 pages).

Huston et al., "Magnetic and Magnetostrictive Properties of Cube Textured Nickel for Magnetostrictive Transducer Applications," IEEE Transactions on Magnetics, vol. 9(4), pp. 636-640 (Dec. 1973).

Incropera et al., Fundamentals of Heat and Mass Transfer, Wiley, New York (1990). (Book—not attached).

F. A. Duck, "Optical Properties of Tissue Including Ultraviolet and Infrared Radiation," pp. 43-71 in *Physical Properties of Tissue* (1990).

Orr et al., "Overview of Bioheat Transfer," pp. 367-384 in Optical-Thermal Response of Laser-Irradiated Tissue, A. J. Welch and M. J. C. van Gernert, eds., Plenum, New York (1995).
Campbell et al, "Thermal Imaging in Surgery," p. 19-3, in *Medical Infrared Imaging,* N. A. Diakides and J. D. Bronzino, Eds. (2008).
U.S. Appl. No. 12/896,351, filed Oct. 1, 2010.
U.S. Appl. No. 12/896,411, filed Oct. 1, 2010.
U.S. Appl. No. 12/896,420, filed Oct. 1, 2010.
U.S. Appl. No. 13/270,459, filed Oct. 11, 2011.
U.S. Appl. No. 13/251,766, filed Oct. 3, 2011.

* cited by examiner

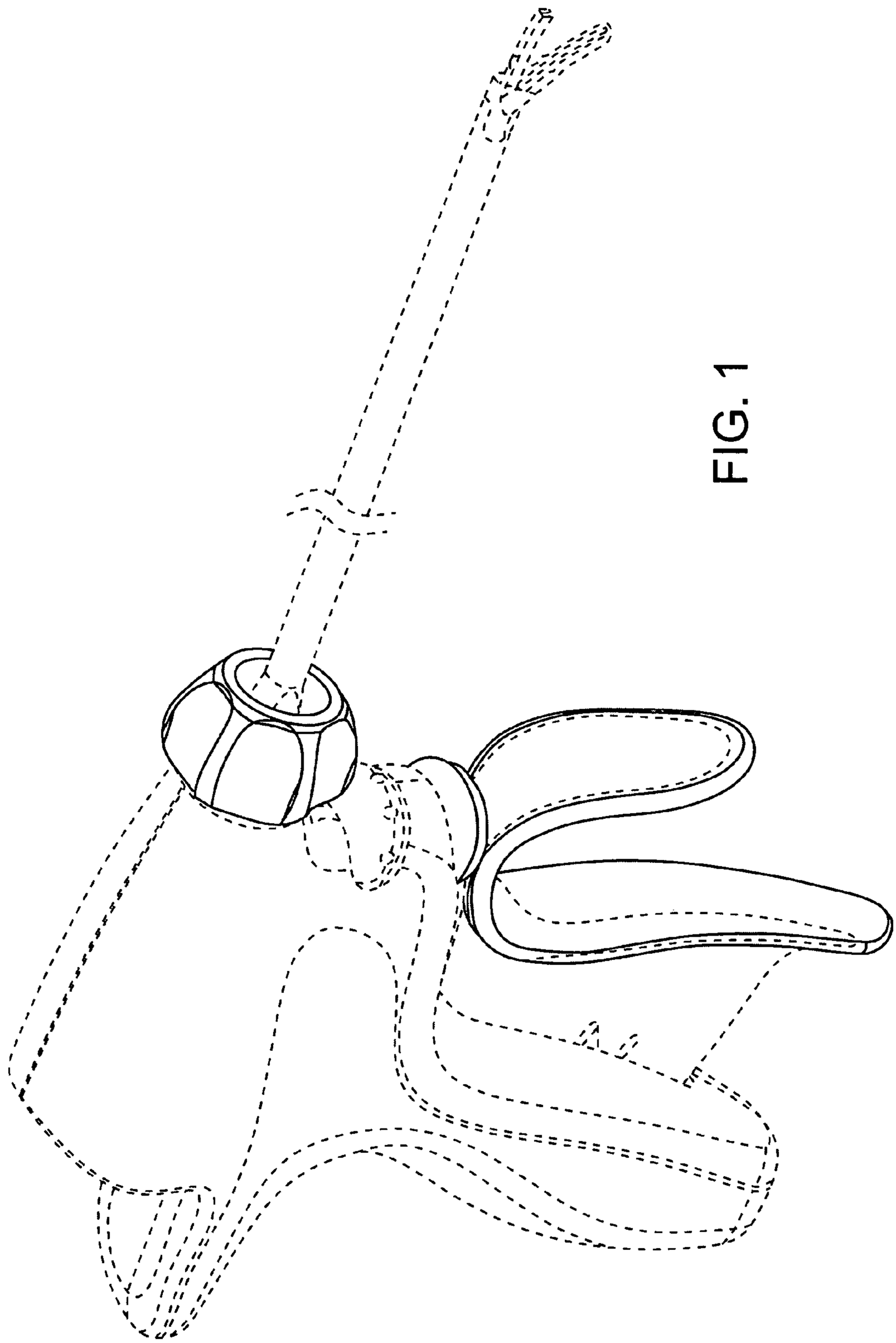

FIG. 1

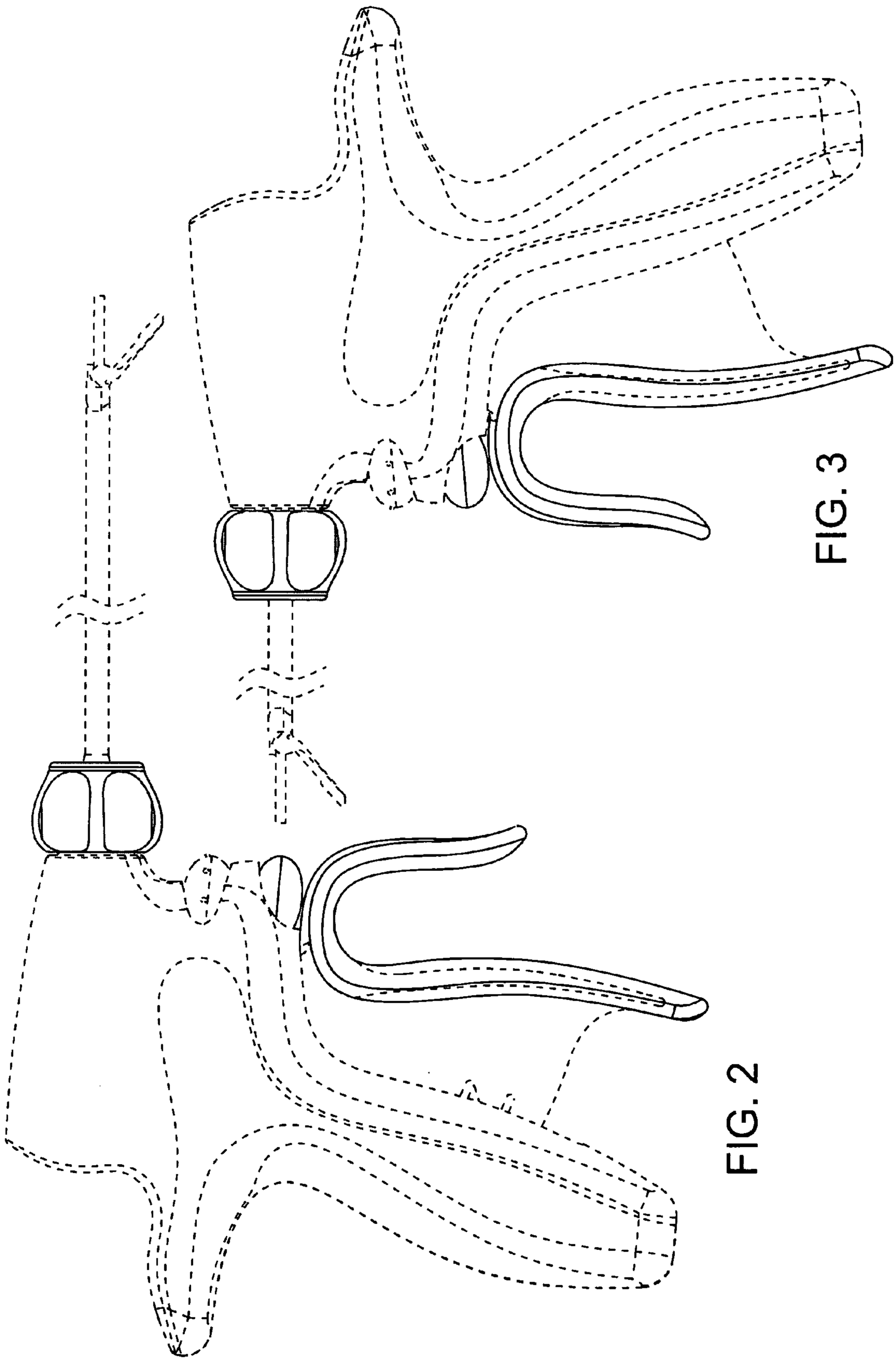

FIG. 3

FIG. 2

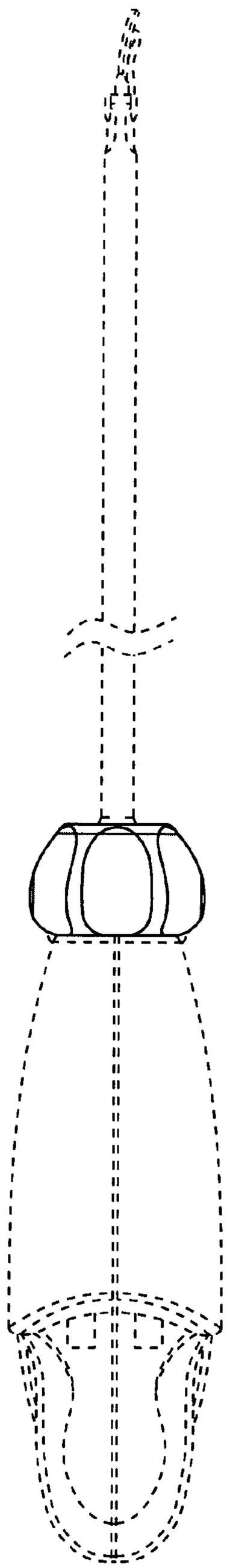

FIG. 4

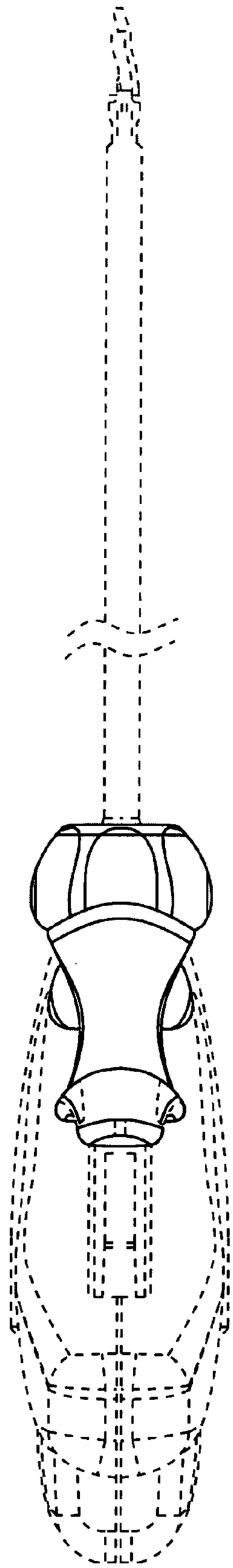

FIG. 5

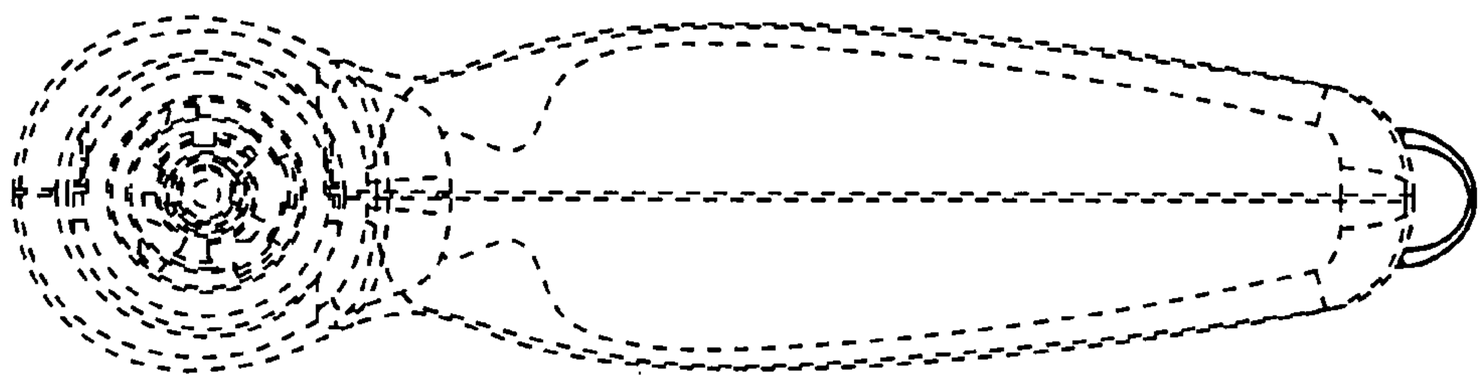

FIG. 7

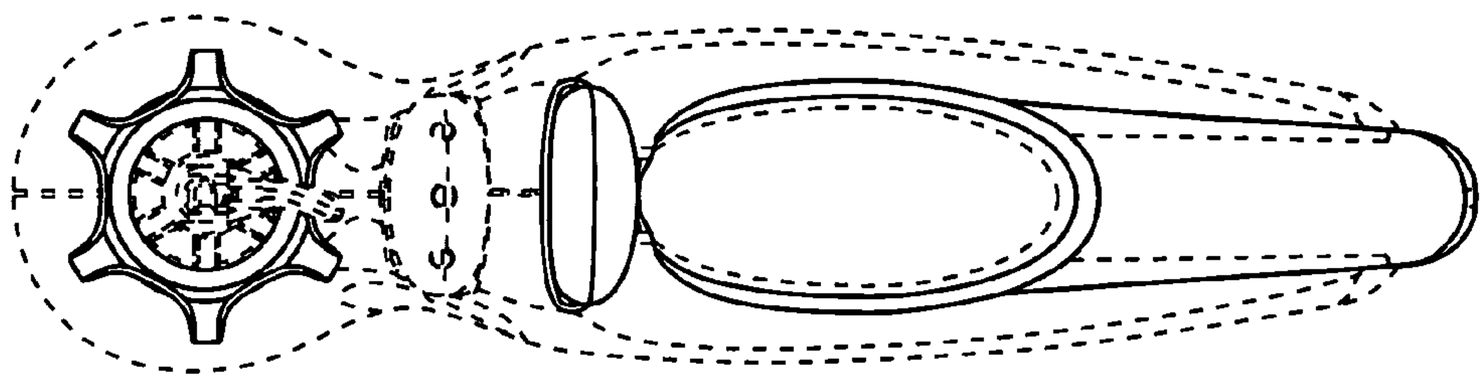

FIG. 6