US00D661601S

(12) United States Design Patent
Sanfilippo

(10) **Patent No.: US D661,601 S**
(45) **Date of Patent: ** Jun. 12, 2012**

(54) **CONTAINER**

(75) Inventor: **John E. Sanfilippo**, Barrington Hills, IL (US)

(73) Assignee: **Clear Lam Packaging, Inc.**, Elk Grove Village, IL (US)

(**) Term: **14 Years**

(21) Appl. No.: **29/407,747**

(22) Filed: **Dec. 1, 2011**

(51) **LOC (9) Cl.** **09-03**

(52) **U.S. Cl.** **D9/756**; D9/761; D9/737

(58) **Field of Classification Search** D9/420–426, D9/432, 414, 428, 761, 737, 418, 756; D7/629, D7/602; D3/273, 294, 20, 203.3, 206, 276, D3/282, 284, 293, 295–298, 302, 315, 901, D3/903, 905; 229/902, 904, 406, 407, 903; 426/106; 220/781–794, 674, 675, 4.21–4.24, 220/555, 556, 810, 836, 837, 841, 366.1, 220/367; 206/508, 216, 541, 6.1, 214, 575, 206/579; D6/6.1, 214, 575, 579
See application file for complete search history.

(56) **References Cited**

U.S. PATENT DOCUMENTS

5,456,379 A * 10/1995 Krupa et al. 220/835
D394,985 S * 6/1998 Curtis et al. D7/538
D514,452 S * 2/2006 Enriquez D9/759
D558,045 S * 12/2007 Templeton D9/420
D577,578 S * 9/2008 Lymn et al. D9/761
D578,388 S * 10/2008 Lymn et al. D9/757
D583,659 S * 12/2008 Lyon et al. D9/761
D592,076 S * 5/2009 Sipe et al. D9/756
D592,077 S * 5/2009 Sipe et al. D9/756
* cited by examiner

Primary Examiner — Mark Goodwin
(74) *Attorney, Agent, or Firm* — Cardinal Law Group

(57) **CLAIM**

The ornamental design for a container, as shown and described.

DESCRIPTION

FIG. **1** is a bottom perspective view of a container showing my new design;
FIG. **2** is a top perspective view thereof;
FIG. **3** is a top plan view thereof;
FIG. **4** is a bottom plan view thereof;
FIG. **5** is a front side view thereof;
FIG. **6** is a back side view thereof;
FIG. **7** is a left side view thereof;
FIG. **8** is a right side view thereof;
FIG. **9** is a perspective view thereof in a closed configuration;
FIG. **10** is a cross section view thereof taken along line **10-10** of FIG. **15**;
FIG. **11** is a cross section view thereof taken along line **11-11** of FIG. **15**;
FIG. **12** is a cross section view thereof taken along line **12-12** of FIG. **15**;
FIG. **13** is a cross section view thereof taken along line **13-13** of FIG. **15**;
FIG. **14** is a cross section view thereof taken along line **14-14** of FIG. **15**; and,
FIG. **15** is a bottom perspective view thereof shown with cross section lines.

1 Claim, 10 Drawing Sheets

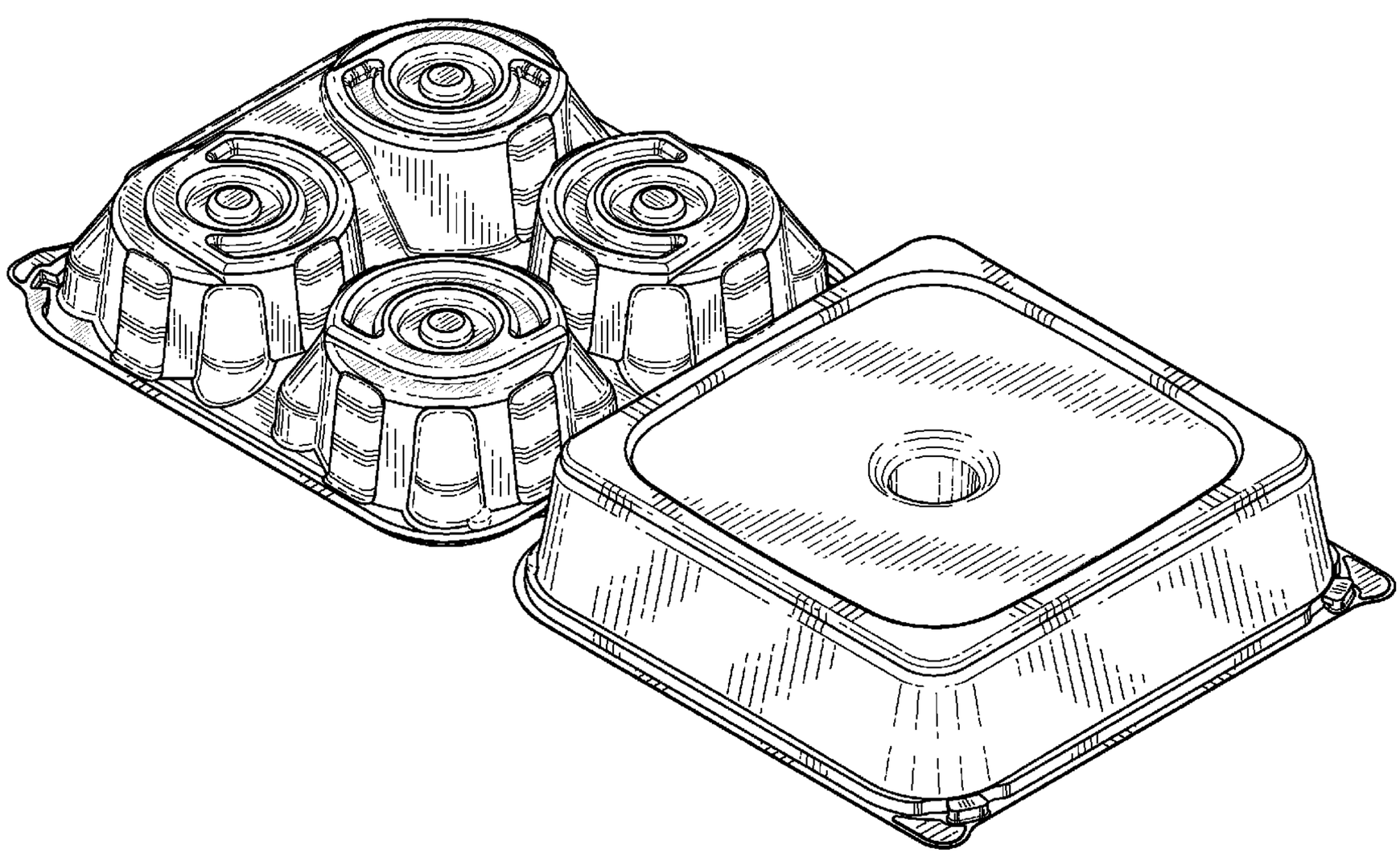

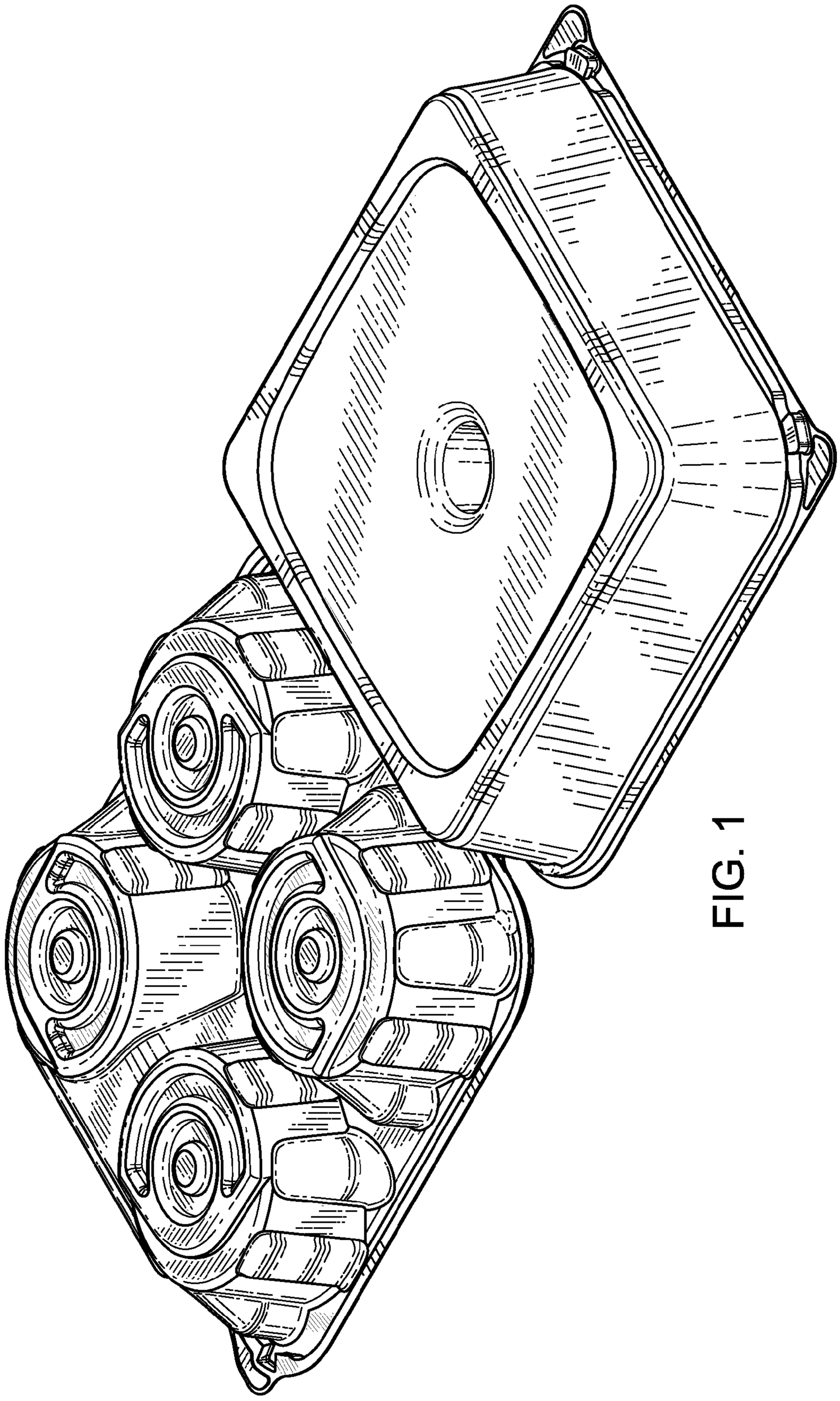

FIG. 1

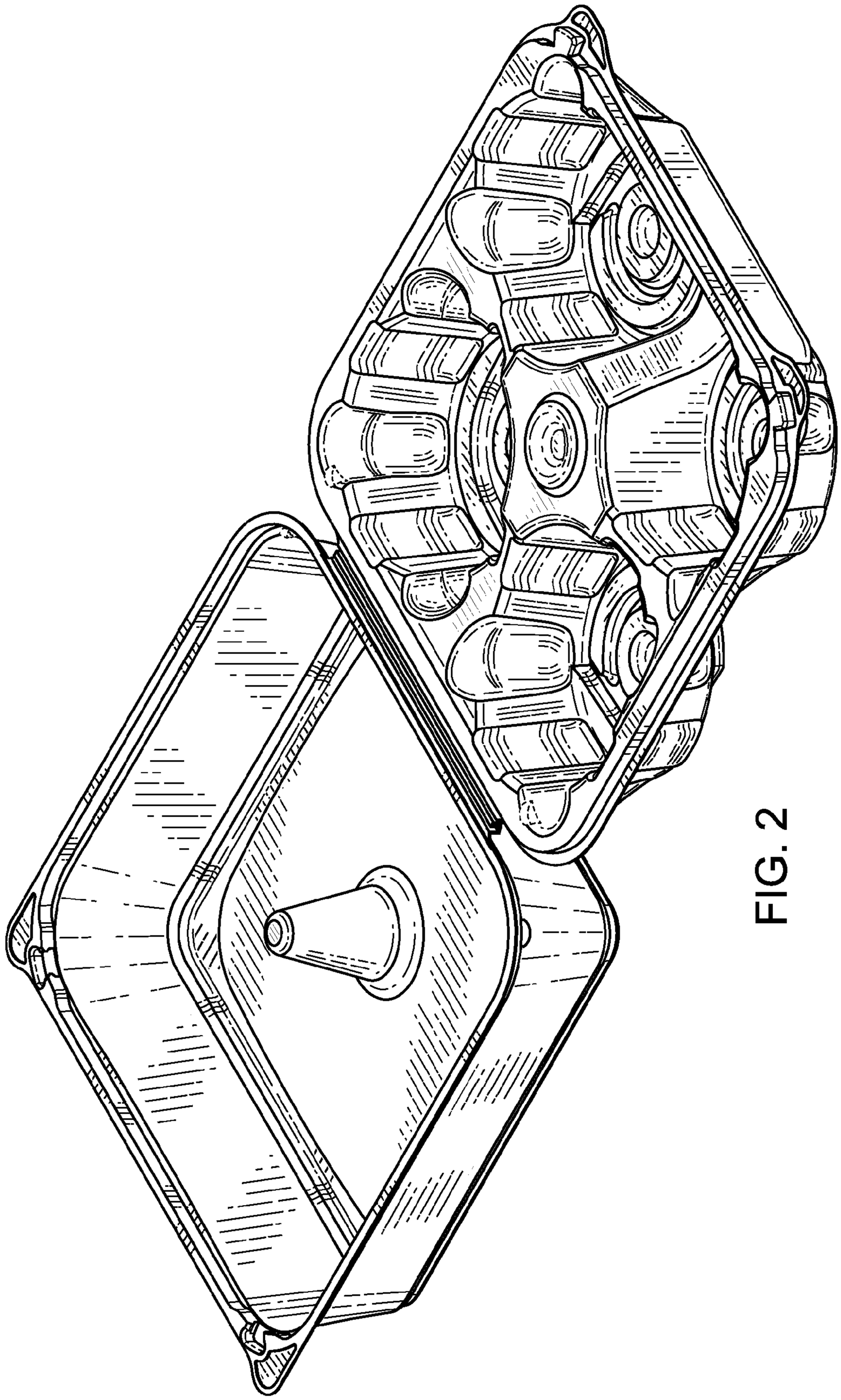

FIG. 2

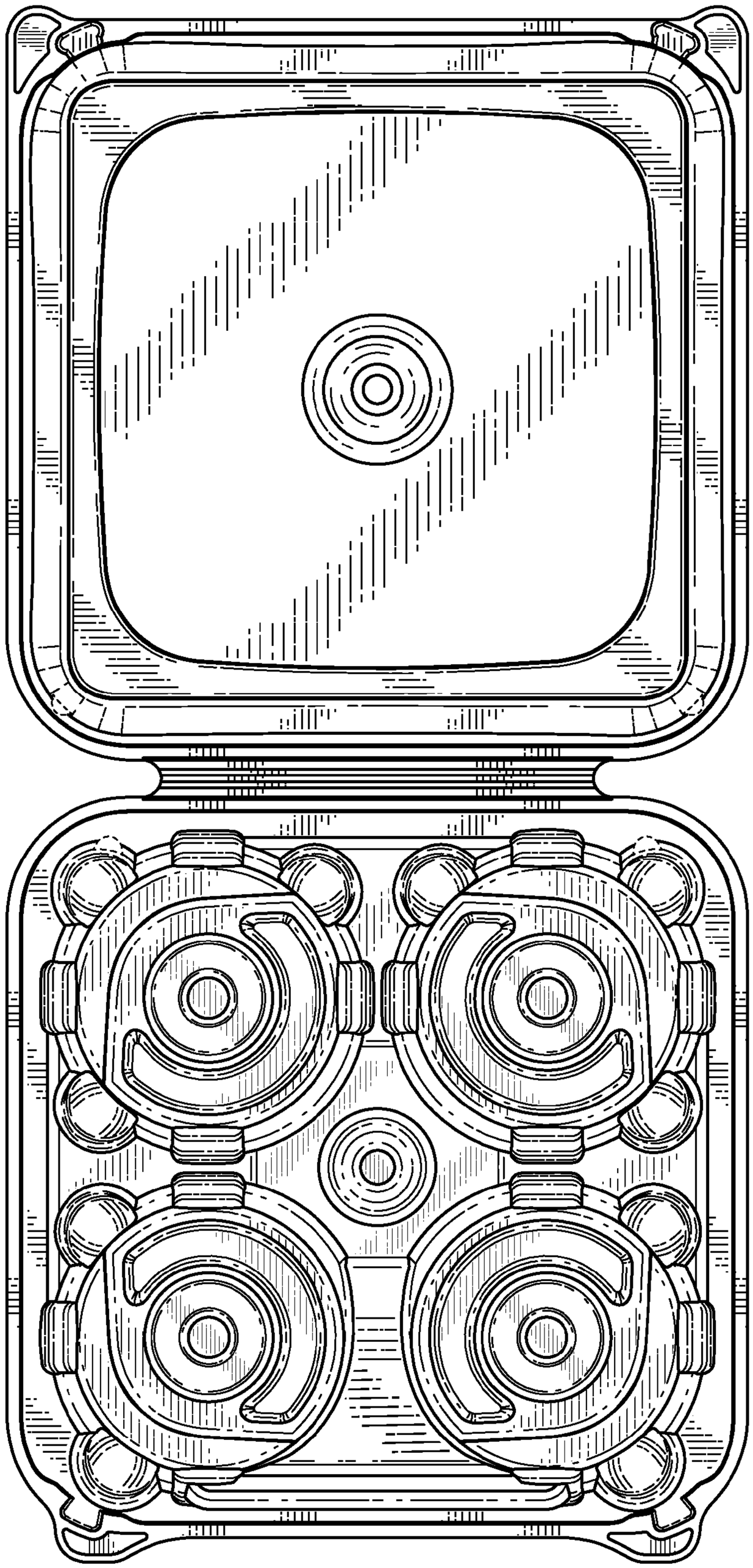

FIG. 3

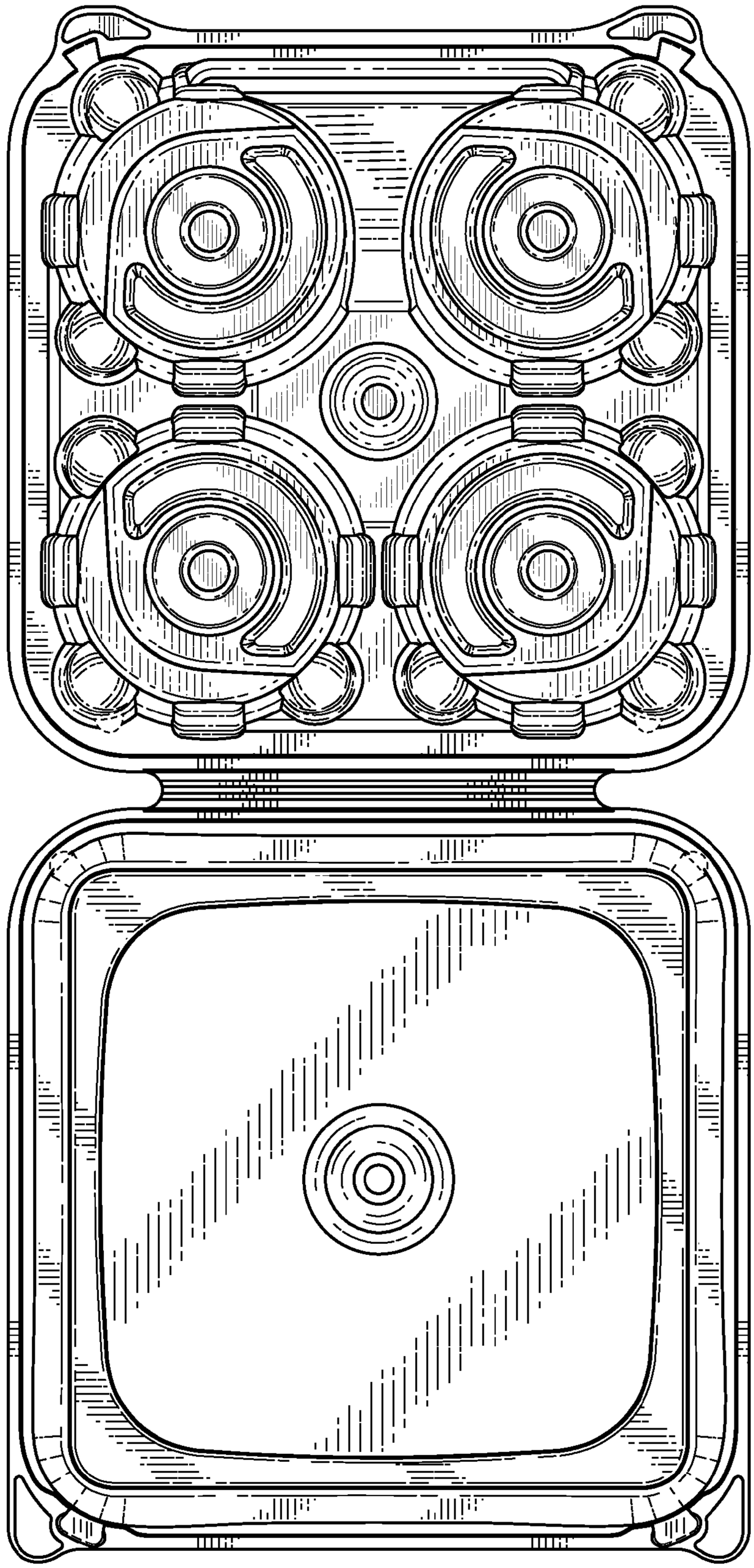

FIG. 4

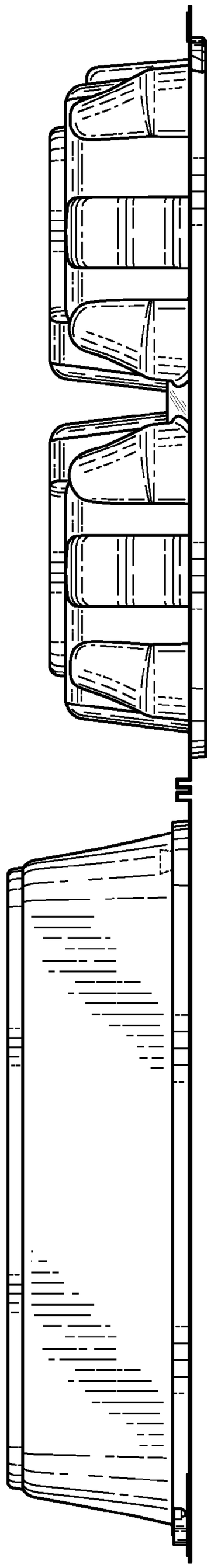

FIG. 5

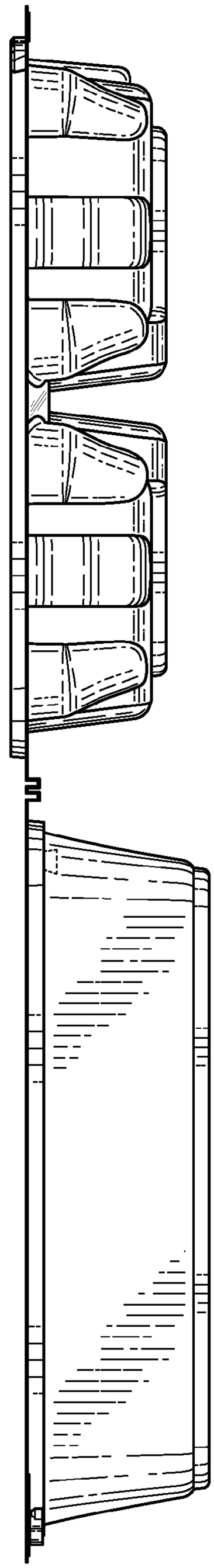

FIG. 6

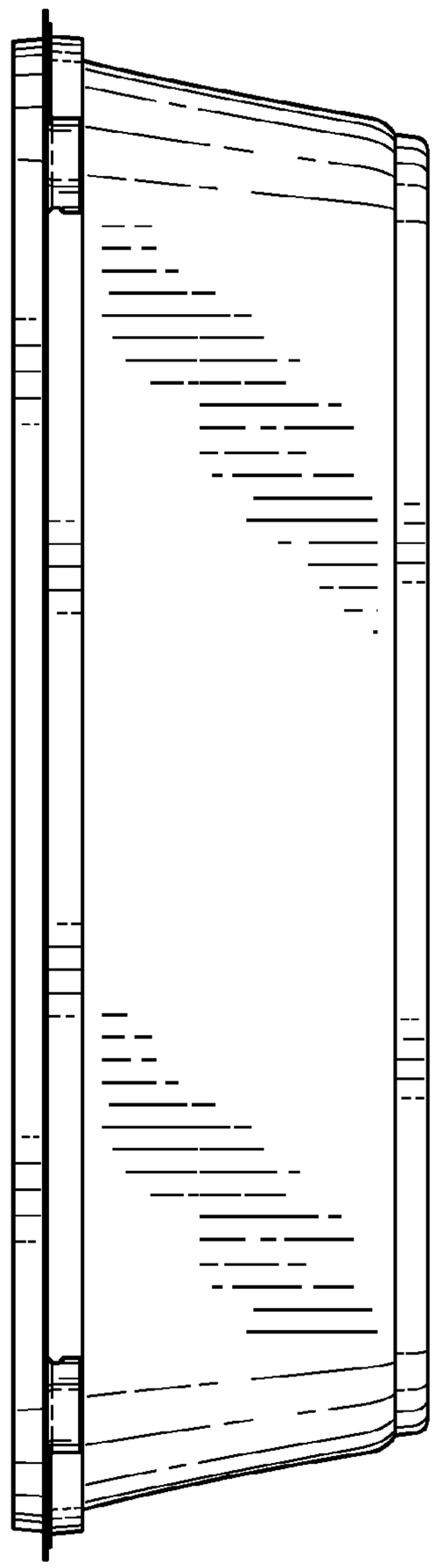

FIG. 7

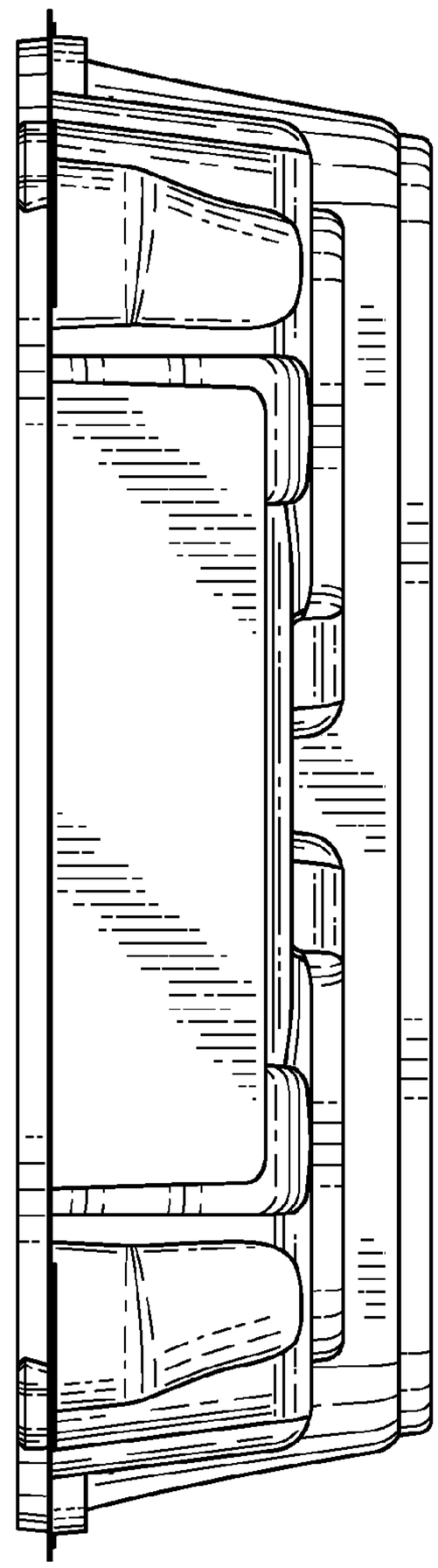

FIG. 8

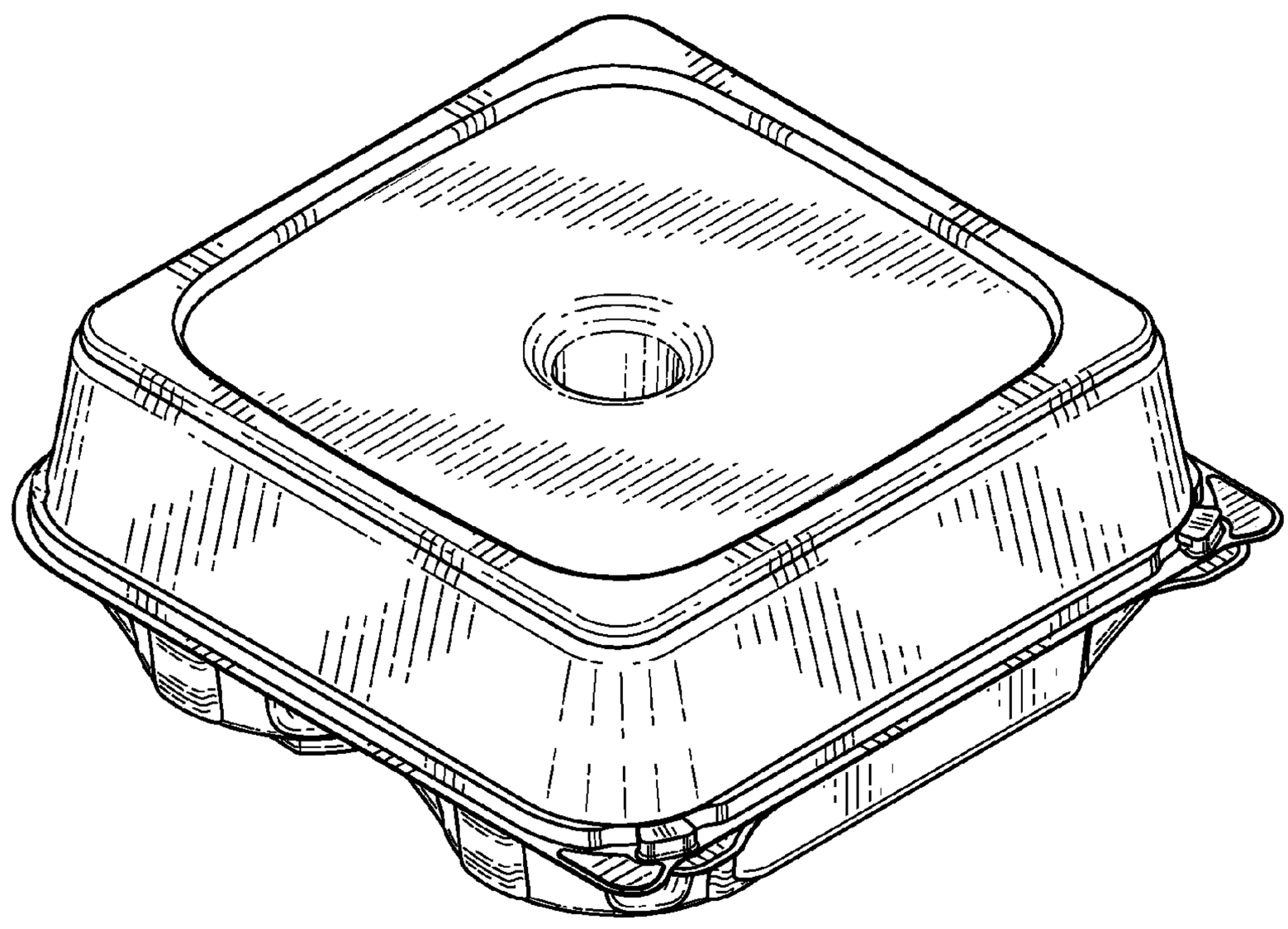

FIG. 9

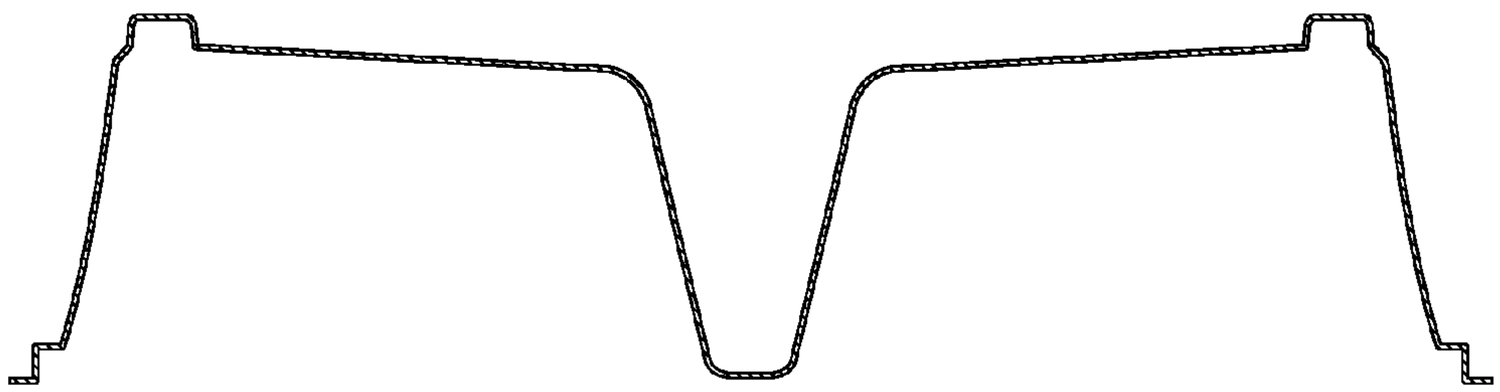

FIG. 10

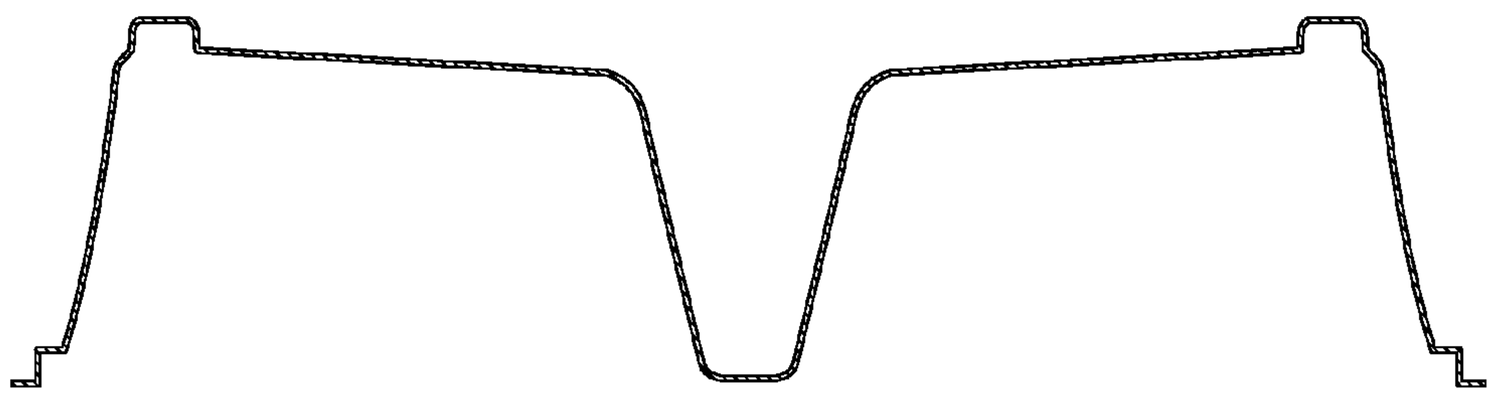

FIG. 11

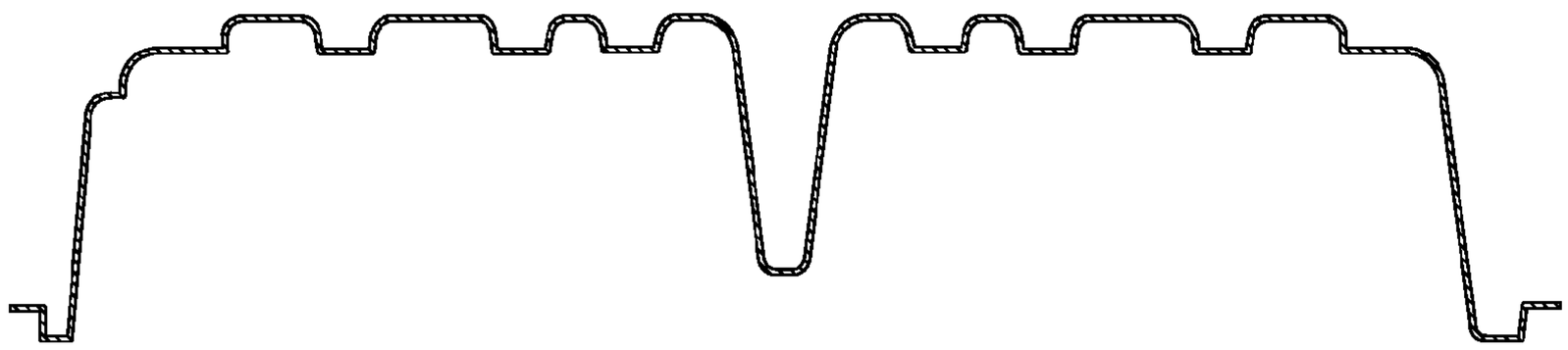

FIG. 12

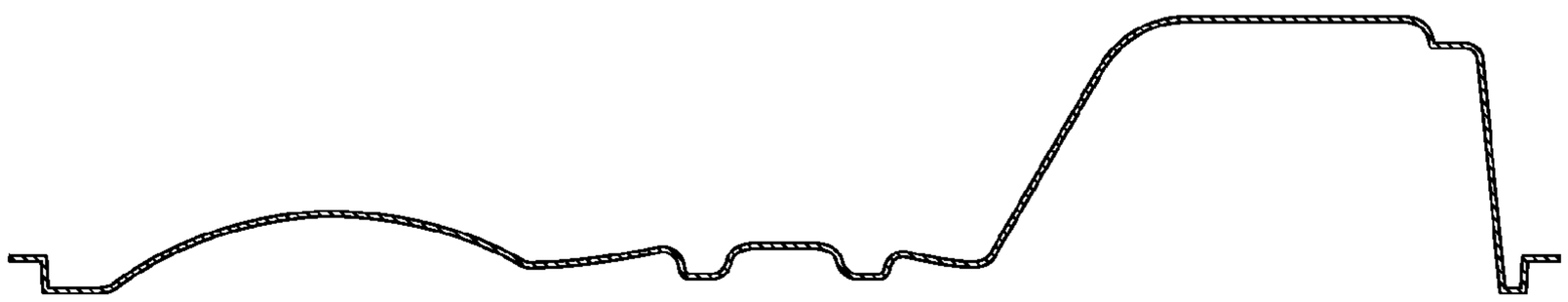

FIG. 13

FIG. 14

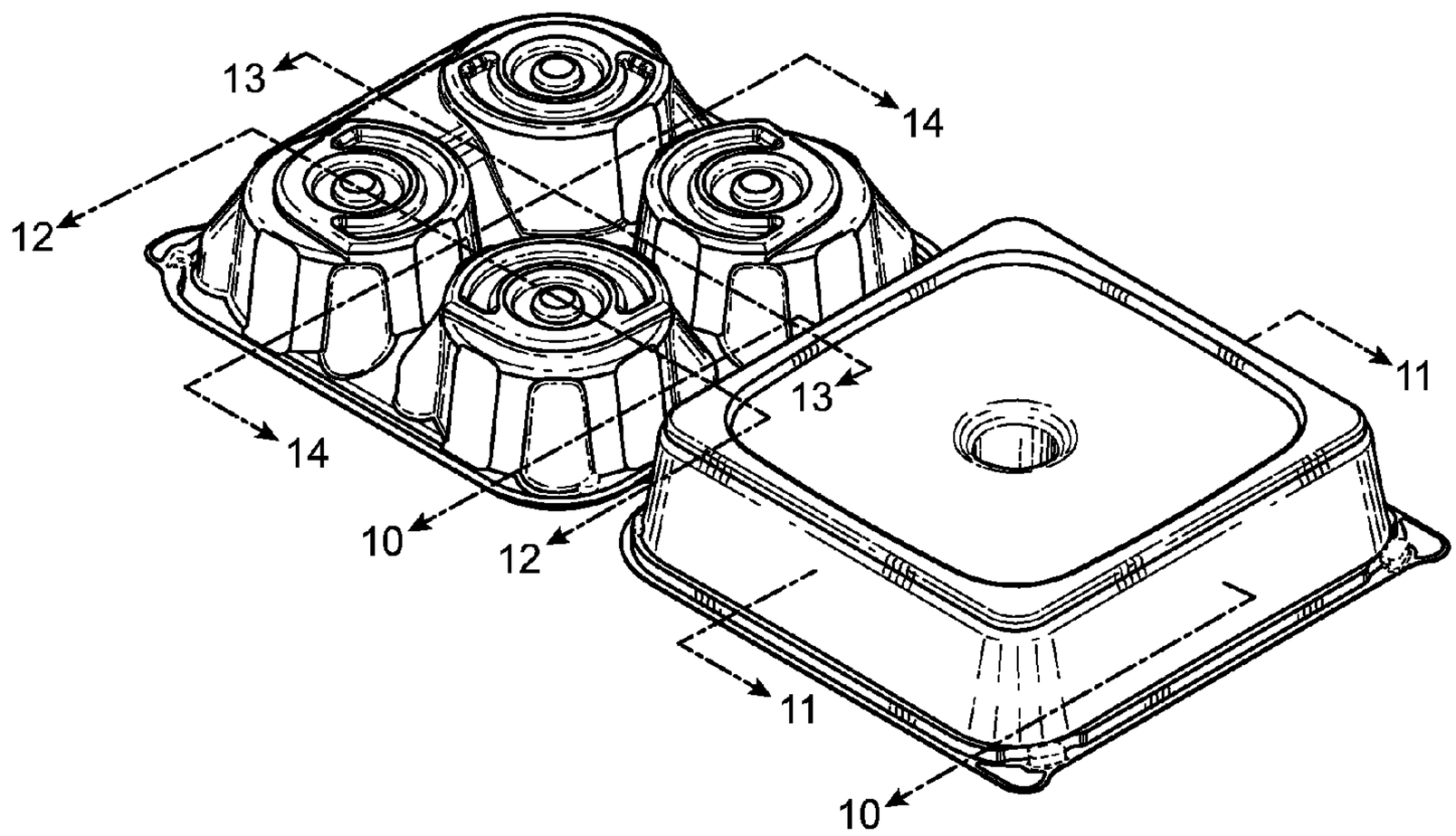

FIG. 15