US00D660845S

# (12) United States Design Patent

Schmauch et al.

(10) Patent No.: US D660,845 S
(45) Date of Patent: ** May 29, 2012

(54) **WALL MOUNTED EXTENSION ARM**

(75) Inventors: **Cisco Patrick Schmauch**, Rohnert Park, CA (US); **Aaron Abroff**, Acton, MA (US); **Cristian J. Daugbjerg**, Novato, CA (US)

(73) Assignee: **GCX Corporation**, Petaluma, CA (US)

(**) Term: **14 Years**

(21) Appl. No.: **29/389,570**

(22) Filed: **Apr. 13, 2011**

(51) **LOC (9) Cl.** ..... **14-02**

(52) **U.S. Cl.** ..... **D14/452**

(58) **Field of Classification Search** ..... D14/452, D14/451, 448, 447, 239, 253; D8/349, 363, D8/373, 380; 248/917–924, 122.1, 124.1, 248/125.8, 371, 393, 157, 425, 176.1, 186.1; 361/679.02, 679.04, 679.05, 679.06, 679.07, 361/679.21, 679.22

See application file for complete search history.

(56) **References Cited**

U.S. PATENT DOCUMENTS

| | | | | | |
|---|---|---|---|---|---|
| 7,048,242 | B2 * | 5/2006 | Oddsen, Jr. | ..... | 248/280.11 |
| D537,323 | S * | 2/2007 | Saez | ..... | D8/363 |
| D544,489 | S * | 6/2007 | Oddsen et al. | ..... | D14/452 |
| D555,657 | S * | 11/2007 | Loyd | ..... | D14/452 |
| D556,205 | S * | 11/2007 | Wohlford et al. | ..... | D14/452 |
| D557,125 | S * | 12/2007 | Worrall et al. | ..... | D8/380 |
| D584,734 | S * | 1/2009 | Chu | ..... | D14/452 |
| D598,917 | S * | 8/2009 | Luber | ..... | D14/375 |
| 7,694,927 | B2 * | 4/2010 | Chuang | ..... | 248/276.1 |
| D627,474 | S * | 11/2010 | Nordgren et al. | ..... | D24/185 |
| D631,052 | S * | 1/2011 | Hung | ..... | D14/452 |
| 2003/0075653 | A1 * | 4/2003 | Li | ..... | 248/274.1 |

* cited by examiner

*Primary Examiner* — Angela J Lee

(74) *Attorney, Agent, or Firm* — Michael A. Glenn; Glenn Patent Group

(57) **CLAIM**

The ornamental design for a wall mounted extension arm, as shown and described.

**DESCRIPTION**

FIG. **1** is a perspective view of an ornamental design for a wall mounted extension arm according to a first embodiment of my invention;

FIG. **2** is another perspective view thereof, but showing the extended portion in a different location;

FIG. **3** is a right side view of FIG. **1**, but shown in a folded position;

FIG. **4** is a right side view of FIG. **1**, the left side being a mirror image thereof;

FIG. **5** is a top view thereof;

FIG. **6** is a bottom view thereof;

FIG. **7** is a front view thereof;

FIG. **8** is a rear view thereof;

FIG. **9** is a right side view of a second embodiment of a wall mounted extension arm, the left side being a mirror image thereof;

FIG. **10** is a front view thereof;

FIG. **11** is a rear view thereof;

FIG. **12** is a bottom view thereof; and,

FIG. **13** is a top view thereof.

**1 Claim, 5 Drawing Sheets**

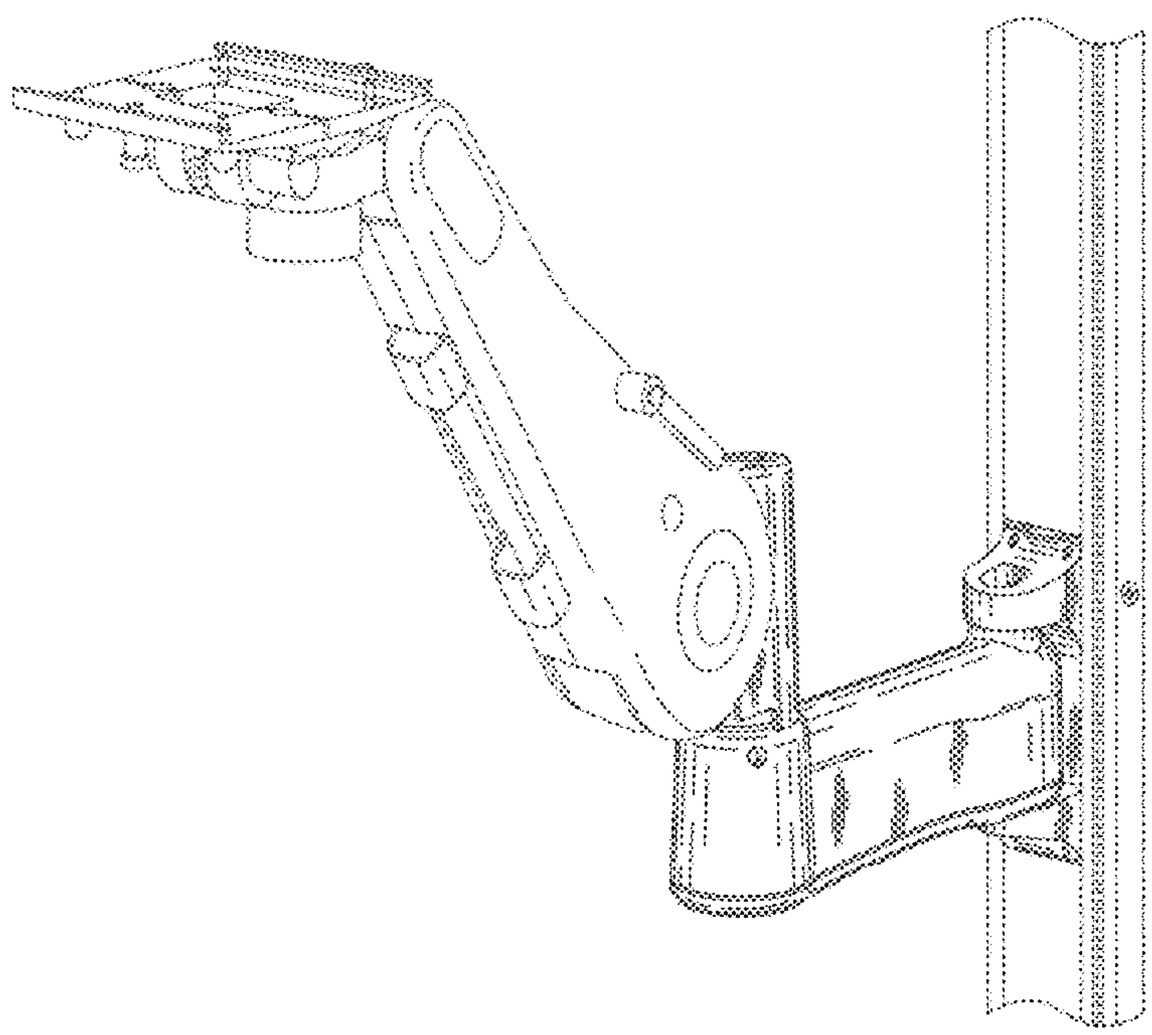

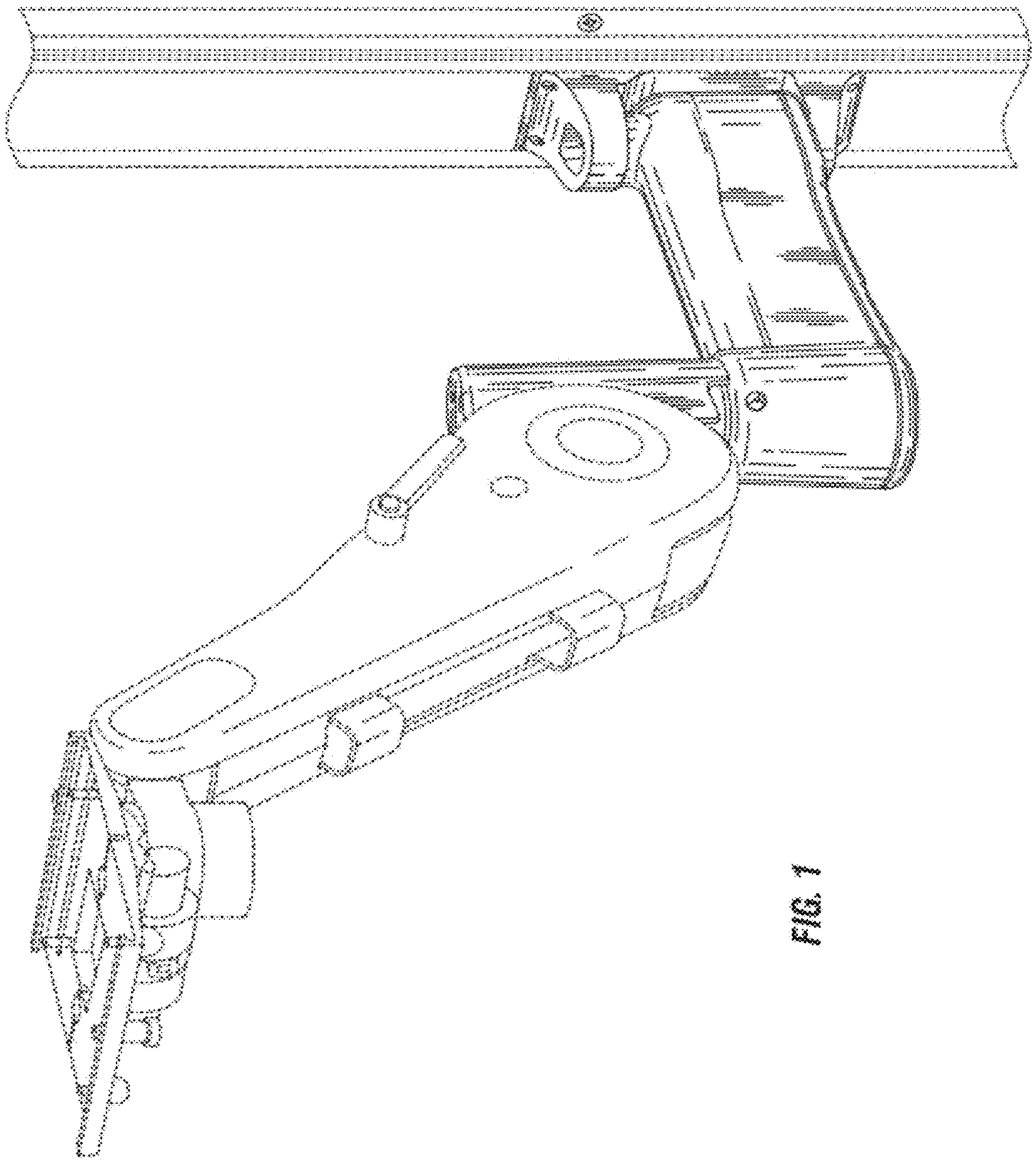

FIG. 1

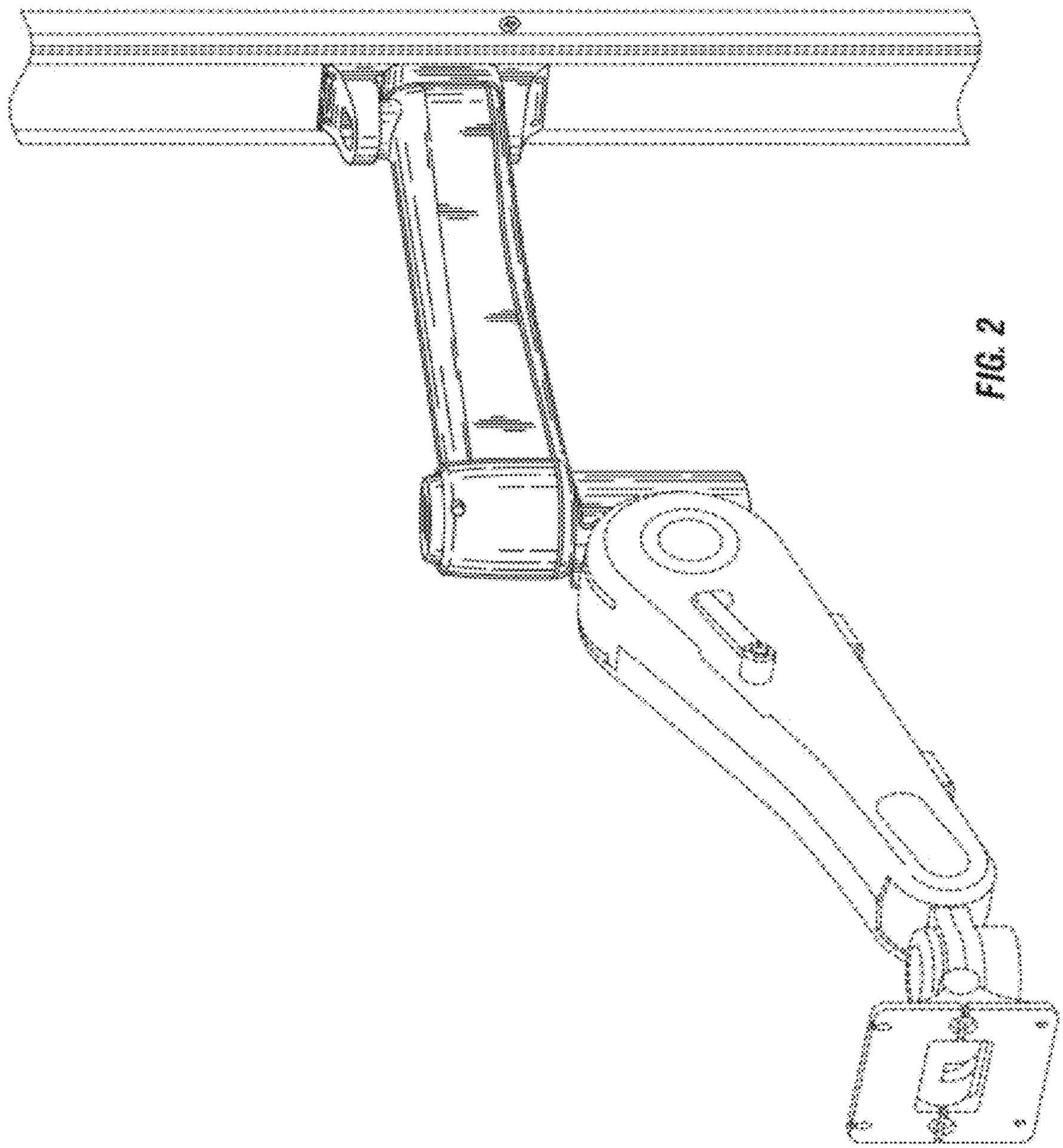

FIG. 2

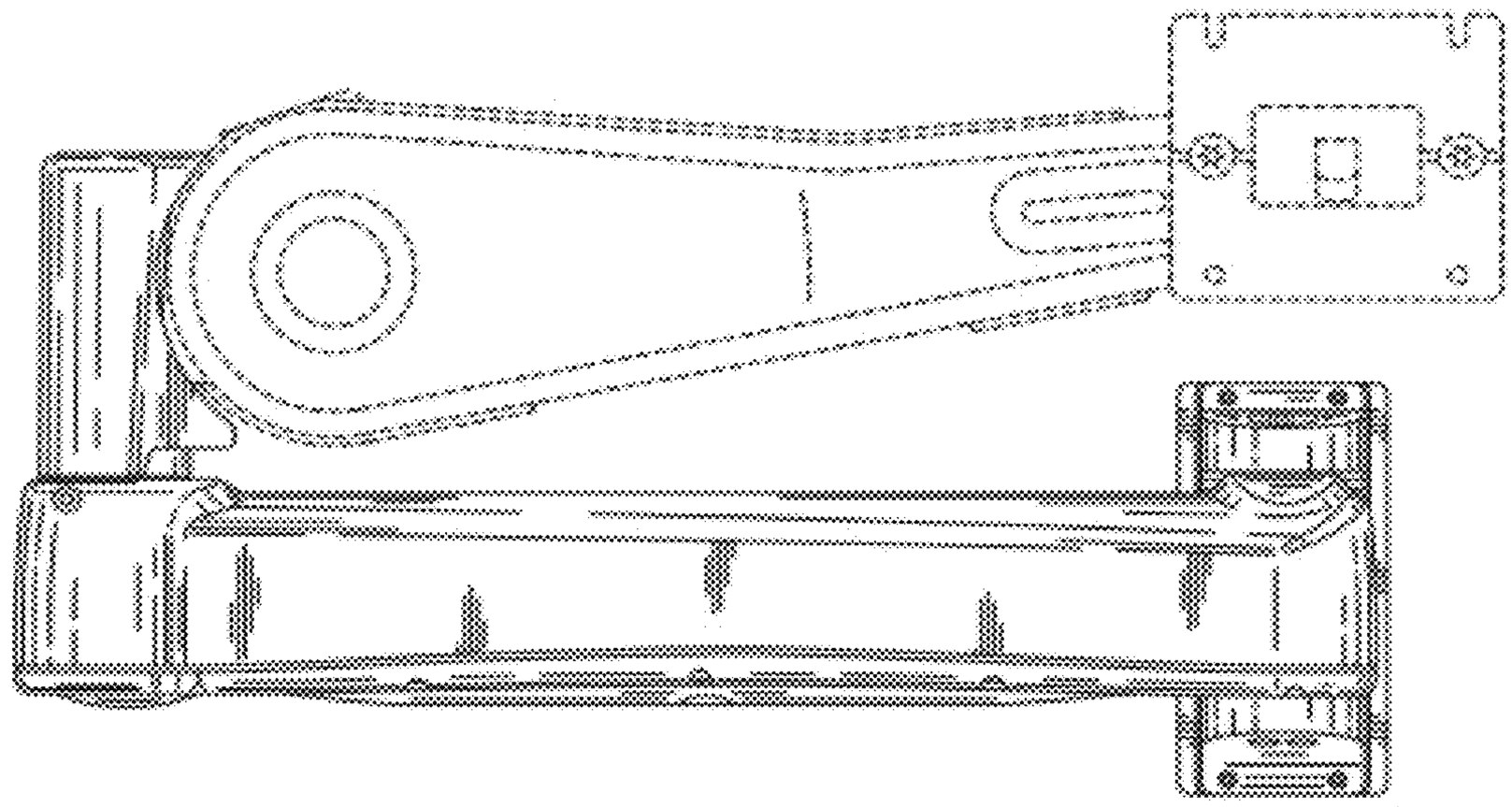

FIG. 3

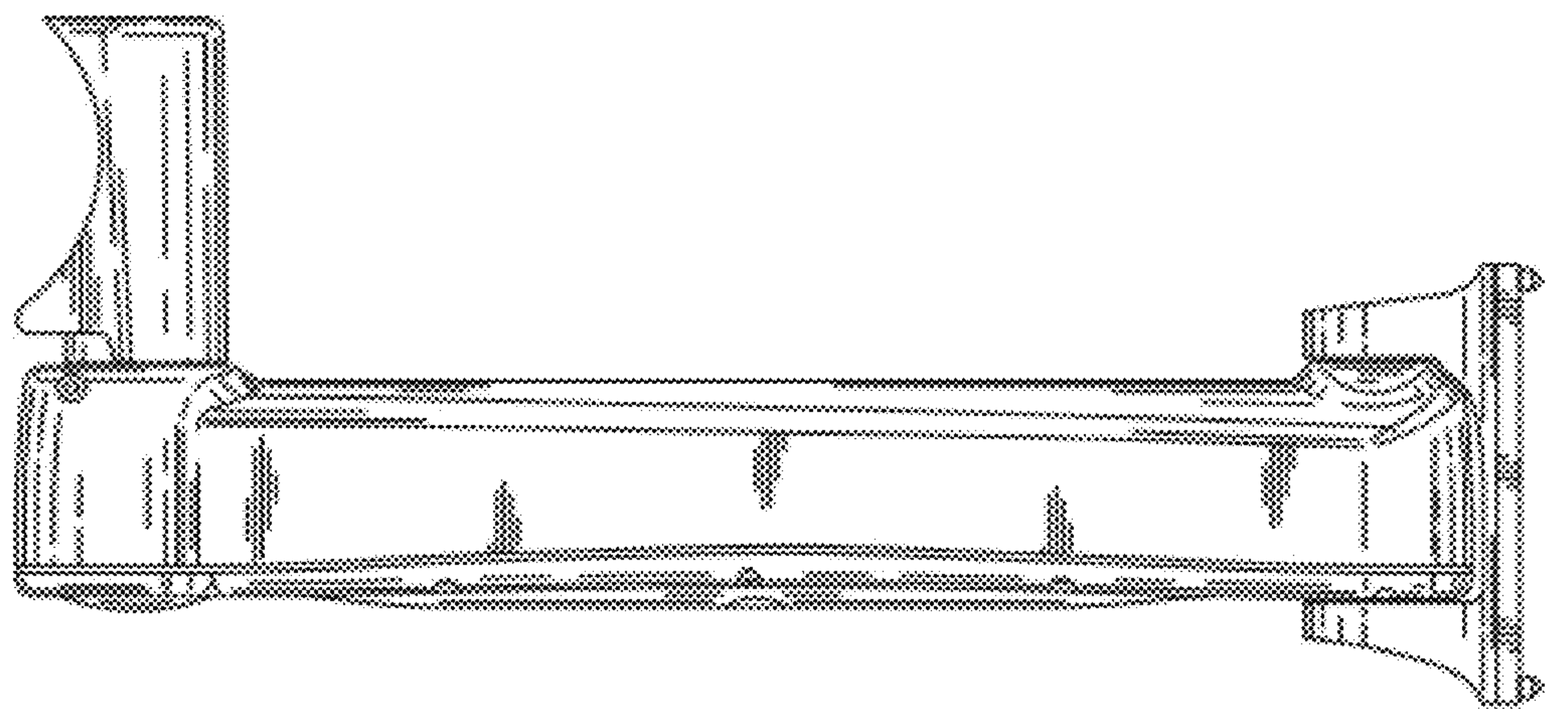

FIG. 4

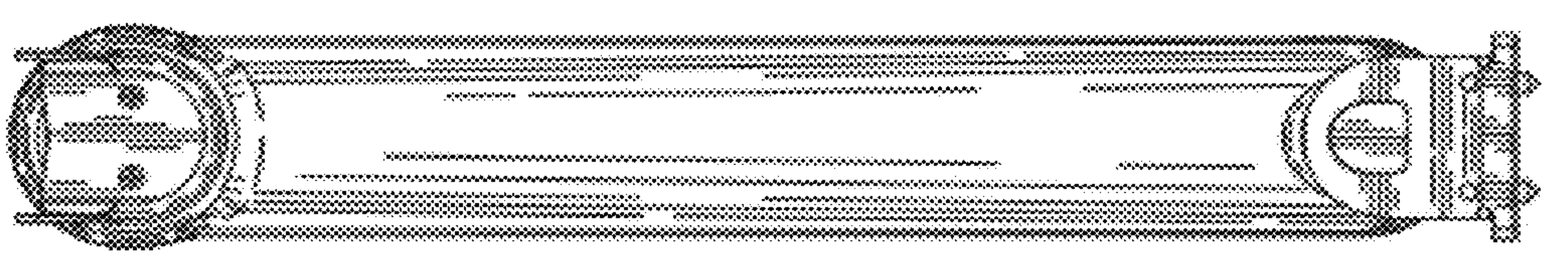

FIG. 5

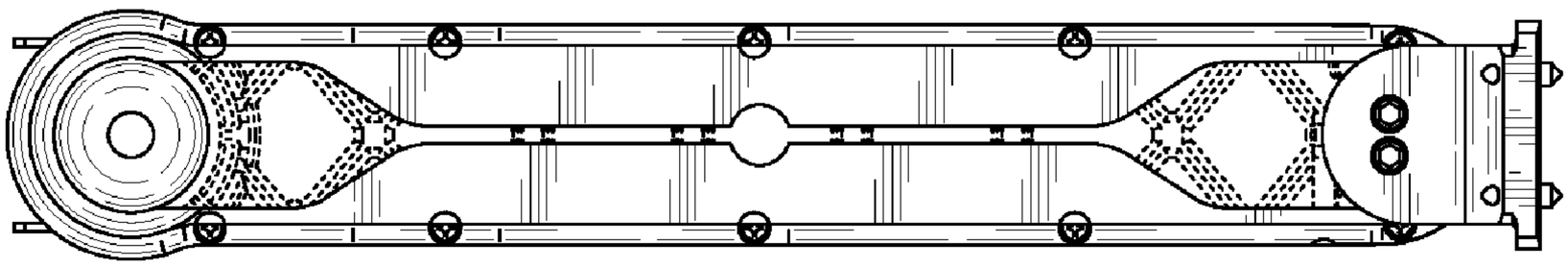

FIG. 6

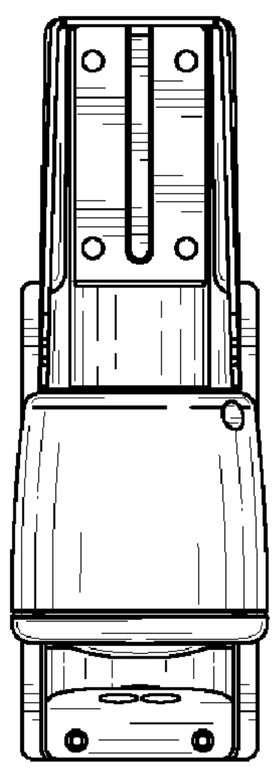

FIG. 7

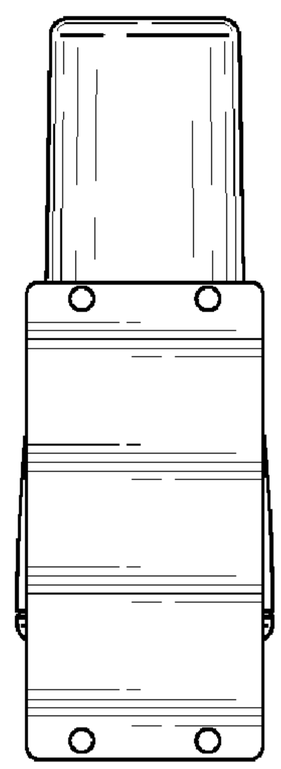

FIG. 8

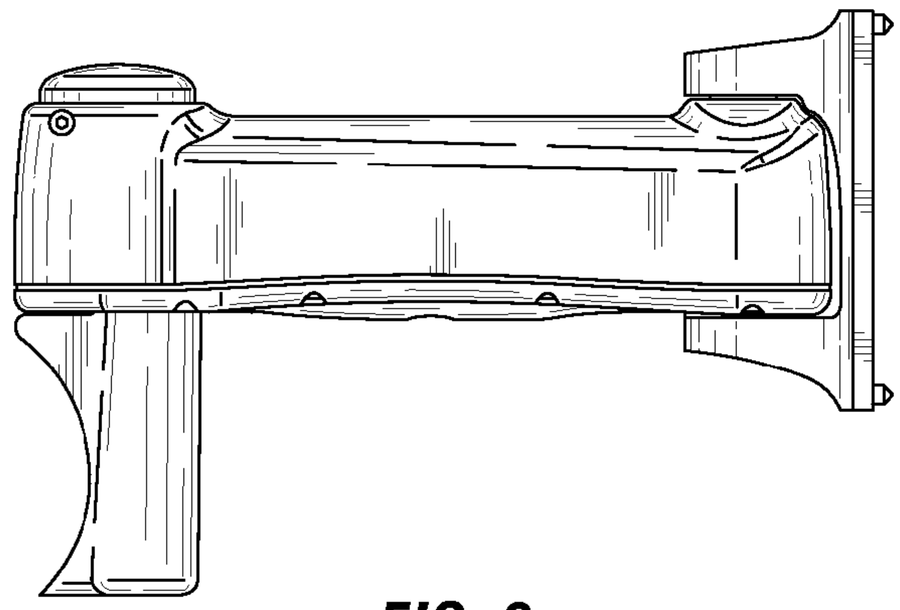

FIG. 9

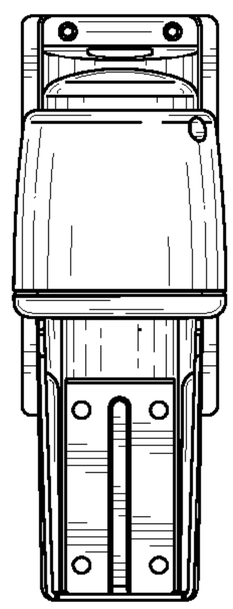

FIG. 10

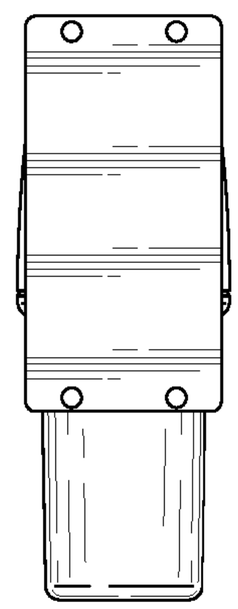

FIG. 11

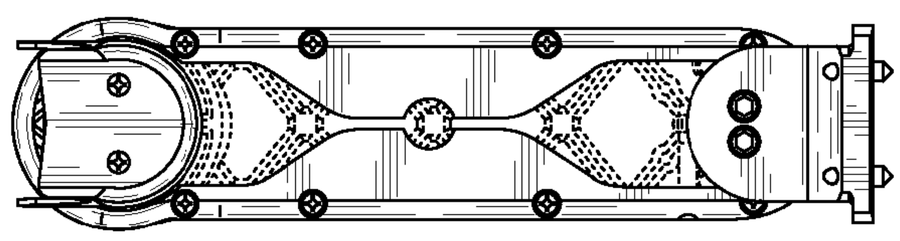

FIG. 12

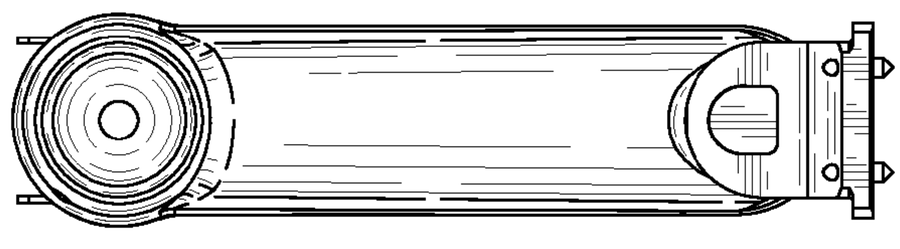

FIG. 13