US00D660435S

(12) United States Design Patent

Smith et al.

(10) Patent No.: US D660,435 S
(45) Date of Patent: ** May 22, 2012

(54) **ORTHODONTIC BRACKET**

(75) Inventors: **Jeffrey Allen Smith**, Denver, CO (US); **Nam Trinh**, Highlands Ranch, CO (US)

(73) Assignee: **RMO, Inc.**, Denver, CO (US)

(**) Term: **14 Years**

(21) Appl. No.: **29/391,877**

(22) Filed: **May 13, 2011**

(51) **LOC (9) Cl.** **24-99**

(52) **U.S. Cl.** **D24/180**

(58) **Field of Classification Search** D24/155–156, D24/176, 180; 433/8–18

See application file for complete search history.

(56) **References Cited**

U.S. PATENT DOCUMENTS

1,890,487	A	12/1932	Angle
3,028,671	A	4/1962	Berger
3,391,461	A	7/1968	Johnson
3,435,527	A	4/1969	Kesling
3,494,034	A	2/1970	Kesling
3,496,637	A	2/1970	Etengoff
3,504,438	A	4/1970	Wittman et al.
3,526,961	A	9/1970	Kesling
3,765,091	A	10/1973	Northcutt
3,838,514	A	10/1974	Polak
3,854,207	A	12/1974	Wildman
3,874,080	A	4/1975	Wallshein
3,922,787	A	12/1975	Fischer et al.
3,930,311	A	1/1976	Andrews
3,964,156	A	6/1976	Williams et al.
3,969,821	A	7/1976	Lee, Jr. et al.
4,028,809	A	6/1977	Wallshein
4,063,360	A	12/1977	Waller
4,094,068	A	6/1978	Schinhammer
4,103,423	A	8/1978	Kessel
4,134,208	A	1/1979	Pearlman
4,165,561	A	8/1979	Miller et al.
4,172,999	A	10/1979	Leidich
4,193,195	A	3/1980	Merkel et al.
4,197,642	A	4/1980	Wallshein
4,219,617	A	8/1980	Wallshein
D256,950	S	9/1980	Sable
4,242,085	A	12/1980	Wallshein
4,243,386	A	1/1981	Kawaguchi
4,260,375	A	4/1981	Wallshein
4,299,569	A	11/1981	Frantz

(Continued)

FOREIGN PATENT DOCUMENTS

DE	2534368	2/1977

(Continued)

OTHER PUBLICATIONS

"Brinellium—A Harder, Stronger, and More Wettable Form of Aluminum Oxide," Technical Advances, Materials Technology, Mar./Apr. 1993, vol. 8(3/4), pp. 44-45.

(Continued)

Primary Examiner — Wan Laymon

(74) *Attorney, Agent, or Firm* — Sheridan Ross P.C.

(57) **CLAIM**

The ornamental design for an orthodontic bracket, as shown and described.

DESCRIPTION

FIG. **1** is a perspective view of an orthodontic bracket showing the new design;
FIG. **2** is a top plan view thereof;
FIG. **3** is a bottom plan view thereof;
FIG. **4** is a rear elevation view thereof;
FIG. **5** is a front elevation view thereof;
FIG. **6** is a right elevation view thereof
FIG. **7** is a left elevation view thereof;
FIG. **8** is a perspective view of the orthodontic bracket wherein a swivel clip is shown in a second position of use;
FIG. **9** is a top plan view thereof;
FIG. **10** is a rear elevation view thereof;
FIG. **11** is a front elevation view thereof;
FIG. **12** is a right elevation view thereof; and,
FIG. **13** is a left elevation view thereof.

The broken lines shown in the figures represent portions of the orthodontic bracket that form no part of the claimed design.

1 Claim, 13 Drawing Sheets

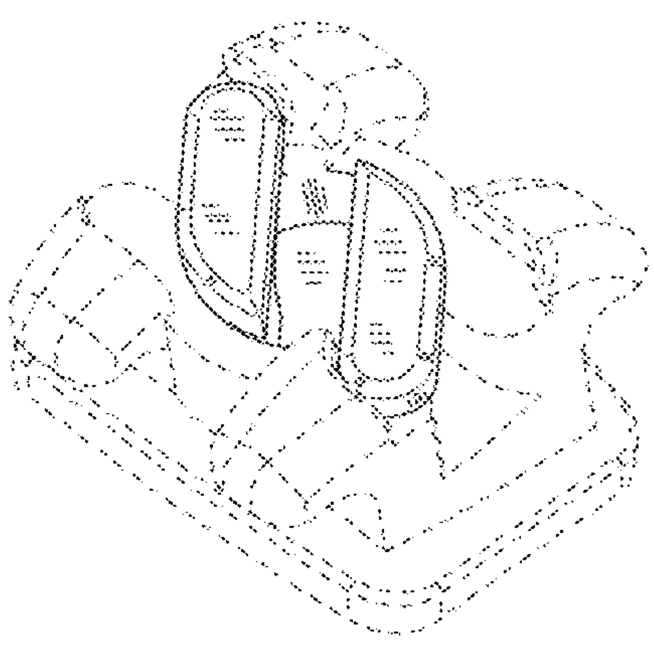

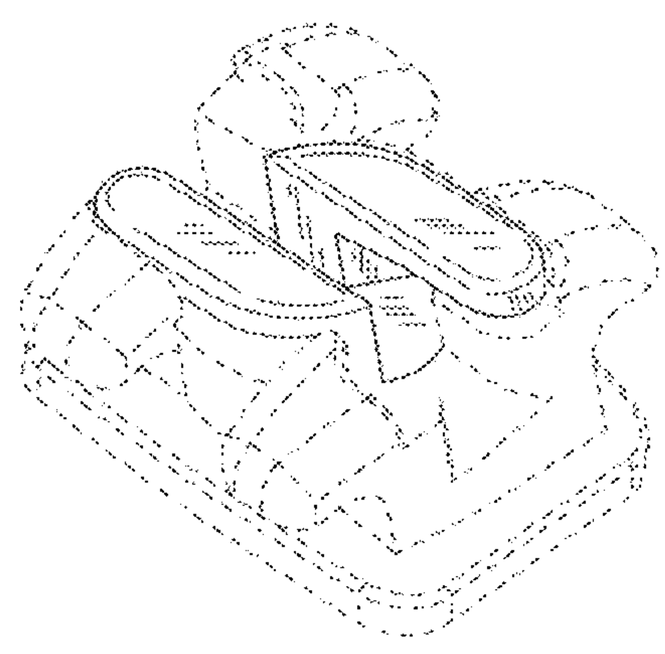

U.S. PATENT DOCUMENTS

4,302,532 A 11/1981 Wallshein
4,322,206 A 3/1982 Reynolds
4,354,834 A 10/1982 Wilson
4,386,908 A 6/1983 Kurz
4,415,330 A 11/1983 Daisley et al.
4,419,078 A 12/1983 Pletcher
4,430,061 A 2/1984 Webb et al.
4,443,190 A 4/1984 Kurz
4,478,577 A 10/1984 Warren, Jr.
4,487,580 A 12/1984 Ridgeway
4,498,867 A 2/1985 Kesling
4,527,975 A 7/1985 Ghafari et al.
4,529,382 A 7/1985 Creekmore
4,531,911 A 7/1985 Creekmore
4,531,991 A 7/1985 Ziemek et al.
4,536,154 A 8/1985 Garton, Jr. et al.
4,544,353 A 10/1985 Maurer et al.
4,545,760 A 10/1985 Forster
4,582,487 A 4/1986 Creekmore
4,604,057 A 8/1986 Viglietti
4,626,209 A 12/1986 Tsai et al.
4,659,309 A 4/1987 Merkel
4,661,059 A 4/1987 Kanno
D290,040 S 5/1987 Kelly
4,669,981 A 6/1987 Kurz
D291,919 S 9/1987 Reynolds
4,712,999 A 12/1987 Rosenberg
4,717,341 A 1/1988 Goldberg et al.
4,735,569 A 4/1988 Munk
4,752,221 A 6/1988 Hanson et al.
4,773,853 A 9/1988 Kussick
4,781,334 A 11/1988 Derichs
4,781,582 A 11/1988 Kesling
4,793,804 A 12/1988 Schudy
4,799,882 A 1/1989 Kesling
4,819,316 A 4/1989 Rossini et al.
4,820,151 A 4/1989 Pospisil
4,838,786 A 6/1989 Reher et al.
4,842,512 A 6/1989 Kesling
4,854,866 A 8/1989 Wilson
4,859,179 A 8/1989 Kesling
4,902,224 A 2/1990 Collins et al.
4,917,602 A 4/1990 Broussard
4,927,362 A 5/1990 Snead
4,936,773 A 6/1990 Kawaguchi
4,954,080 A 9/1990 Kelly et al.
4,963,092 A 10/1990 Snead
4,975,052 A 12/1990 Spencer et al.
4,997,182 A 3/1991 Kussick
5,011,403 A 4/1991 Sadoun et al.
5,022,854 A 6/1991 Broughton et al.
5,030,089 A 7/1991 Kawaguchi
5,044,945 A 9/1991 Peterson
5,057,012 A 10/1991 Kesling
5,059,119 A 10/1991 Snead
5,062,794 A 11/1991 Miura
5,066,225 A 11/1991 Forbes Jones et al.
5,067,897 A 11/1991 Tuneberg
D322,482 S 12/1991 Ianieri et al.
5,071,344 A 12/1991 Wong et al.
5,078,596 A 1/1992 Carberry et al.
5,095,602 A 3/1992 Reher et al.
5,098,288 A 3/1992 Kesling
5,125,831 A 6/1992 Pospisil
5,125,832 A 6/1992 Kesling
5,127,828 A 7/1992 Suyama
5,133,740 A 7/1992 Kussick
5,151,028 A 9/1992 Snead
5,154,607 A 10/1992 Hanson
5,158,452 A 10/1992 Franseen et al.
5,160,261 A 11/1992 Peterson
5,161,969 A 11/1992 Pospisil et al.
D331,975 S 12/1992 Pospisil
5,203,804 A 4/1993 Nikutowski et al.
5,226,814 A 7/1993 Allen
5,230,620 A 7/1993 Watanabe
5,232,361 A 8/1993 Sachdeva et al.
5,238,402 A 8/1993 Rohlcke et al.
5,242,299 A 9/1993 Yoshida
D340,523 S 10/1993 Barngrover
5,252,066 A * 10/1993 Fairhurst 433/8
5,254,002 A 10/1993 Reher et al.
5,256,062 A 10/1993 Griott
5,267,854 A 12/1993 Schmitt
5,267,855 A 12/1993 Tuneberg
5,269,680 A 12/1993 Kawaguchi
5,277,581 A 1/1994 Peterson
5,282,743 A 2/1994 Miura
5,288,229 A 2/1994 Huff et al.
5,292,248 A 3/1994 Schultz
5,295,823 A 3/1994 Farzin-Nia
5,299,934 A 4/1994 Suyama
5,302,117 A 4/1994 Kraut et al.
5,302,121 A 4/1994 Gagin
5,318,440 A 6/1994 Adam et al.
5,320,525 A 6/1994 Forster
5,320,526 A 6/1994 Tuneberg
5,322,435 A 6/1994 Pletcher
5,362,232 A 11/1994 Franseen et al.
5,362,233 A 11/1994 Thompson
5,376,002 A 12/1994 Andreiko
D358,649 S 5/1995 Moschik
D358,650 S 5/1995 Moschik
D359,776 S 6/1995 Hilgers
5,425,640 A 6/1995 Scharf
5,441,408 A 8/1995 Moschik
5,441,409 A 8/1995 Tuneberg
5,443,384 A 8/1995 Franseen et al.
5,454,716 A 10/1995 Banerjee et al.
5,456,599 A 10/1995 Hanson
5,470,228 A 11/1995 Franseen et al.
5,522,725 A 6/1996 Jordan et al.
5,556,277 A 9/1996 Yawata et al.
5,588,833 A 12/1996 Risse
5,595,484 A 1/1997 Orikasa et al.
5,597,302 A 1/1997 Pospisil et al.
5,607,301 A 3/1997 Roman
5,616,026 A 4/1997 Cash
5,618,174 A 4/1997 Mors
5,618,175 A 4/1997 Reher et al.
5,622,494 A 4/1997 Andreiko et al.
5,653,588 A 8/1997 Moschik
5,685,711 A 11/1997 Hanson
5,692,898 A 12/1997 Orikasa et al.
5,707,231 A 1/1998 Watt et al.
5,711,666 A * 1/1998 Hanson 433/11
5,727,941 A 3/1998 Kesling
5,729,768 A 3/1998 Fields et al.
5,746,592 A 5/1998 Nezu et al.
5,746,594 A 5/1998 Jordan et al.
RE35,863 E 7/1998 Sachdeva et al.
5,779,470 A 7/1998 Kussick
5,810,583 A 9/1998 Doyle
5,816,801 A * 10/1998 Farzin-Nia et al. 433/8
5,829,972 A 11/1998 Farzin-Nia
5,857,849 A 1/1999 Kurz
5,871,350 A 2/1999 Clark et al.
5,885,073 A 3/1999 Kussick
5,885,074 A 3/1999 Hanson
5,890,891 A 4/1999 Doyle
5,908,293 A 6/1999 Voudouris
5,915,550 A 6/1999 Gartz
6,053,729 A 4/2000 Brehm et al.
6,086,364 A 7/2000 Brunson
6,109,916 A 8/2000 Wilcko et al.
6,126,441 A 10/2000 Tenti
6,190,165 B1 2/2001 Andreiko et al.
6,193,508 B1 2/2001 Georgakis
6,206,690 B1 3/2001 Vargas
6,217,322 B1 4/2001 Kesling
6,220,857 B1 4/2001 Abels
6,227,849 B1 5/2001 Brehm et al.
6,264,469 B1 7/2001 Moschik
6,280,185 B1 8/2001 Palmer et al.
6,347,939 B2 2/2002 Abels
6,394,798 B1 5/2002 Huff et al.
6,428,314 B1 8/2002 Jones, Jr. et al.

6,461,157	B1	10/2002	Kussick	
6,478,579	B1	11/2002	Brusse	
6,491,519	B1	12/2002	Clark et al.	
6,607,383	B2	8/2003	Abels et al.	
6,616,445	B2	9/2003	Abels et al.	
6,655,957	B2	12/2003	Abels et al.	
6,655,958	B2	12/2003	Abels et al.	
6,656,767	B1	12/2003	King et al.	
6,659,766	B2	12/2003	Abels et al.	
6,659,767	B2	12/2003	Abels et al.	
6,682,345	B2 *	1/2004	Kesling et al.	433/8
6,695,612	B2	2/2004	Abels et al.	
6,705,862	B2	3/2004	Schultz	
6,709,268	B2	3/2004	Pospisil et al.	
6,733,286	B2	5/2004	Abels et al.	
6,776,613	B2	8/2004	Orikasa	
6,846,178	B2	1/2005	Freeman, Jr. et al.	
6,893,257	B2	5/2005	Kelly	
6,910,884	B2	6/2005	Kelly et al.	
6,913,459	B2	7/2005	Fukutomi	
7,025,591	B1	4/2006	Kesling	
7,033,171	B2	4/2006	Wilkerson	
7,192,274	B2 *	3/2007	Stadtmiller et al.	433/8
7,210,927	B2	5/2007	Abels et al.	
7,234,935	B2	6/2007	Abels et al.	
7,481,651	B2 *	1/2009	Sernetz et al.	433/10
7,611,353	B2 *	11/2009	Sommer	433/10
7,695,277	B1	4/2010	Stevens	
7,959,437	B2	6/2011	Zakhem	
2002/0110778	A1	8/2002	Abels et al.	
2002/0187452	A1	12/2002	Abels et al.	
2003/0049582	A1	3/2003	Abels et al.	
2005/0003320	A1	1/2005	Freeman et al.	
2005/0244777	A1	11/2005	Schultz	
2006/0046224	A1	3/2006	Sondhi et al.	
2007/0264606	A1	11/2007	Muha	
2008/0081310	A1	4/2008	Smith et al.	
2008/0160474	A1	7/2008	Wolf et al.	
2010/0055637	A1 *	3/2010	Rodriguez et al.	433/10
2010/0151403	A1 *	6/2010	Tuneberg et al.	433/10
2011/0123942	A1 *	5/2011	Rudman	433/10

FOREIGN PATENT DOCUMENTS

DE	2903768	8/1980
DE	8903611	8/1990
DE	69228472	10/1999
EP	0317098	5/1989
EP	0379668	8/1990
EP	0389223	9/1990
EP	0397533	11/1990
EP	0577398	1/1994
EP	0588961	3/1994
EP	0875211	11/1998
EP	1332727	8/2003
EP	1359859	11/2003
ES	2130174	7/1999
FR	2497657	7/1982
JP	64-25847	1/1989
JP	01-160547	6/1989
JP	02-147112	6/1990
JP	03-21236	1/1991
JP	2579431	2/1997
JP	11-276504	10/1999
WO	WO 91/07925	6/1991
WO	WO 92/20296	11/1992
WO	WO 04/039276	5/2004

OTHER PUBLICATIONS

"Direct Bond Tubes," American Orthodontics, date unknown, p. 76.

"Focus on Brackets," Orthodontic Products, Mar. 2005, pp. 1-2.

3M Unitek Corporation Catalog, 1990, pp. 1-1, 1-3, 3-7, Figs. A, B.

Milewski, John V., "Efficient Use of Whiskers in the Reinforcement of Ceramics," Advanced Ceramics, vol. 1(1), 1986, pp. 36-41.

Ortho Organizers, Inc. Advertisement, "The Supreme™ Mini-Twin®," Journal of Clinical Orthodontics, Sep. 1989, 3 pages.

Ricketts, "Provocations and Perceptions in Cranio-Facial Orthopedics," RMO, Inc., Denver, CO, USA, 1989, cover and pp. 982-1021.

* cited by examiner

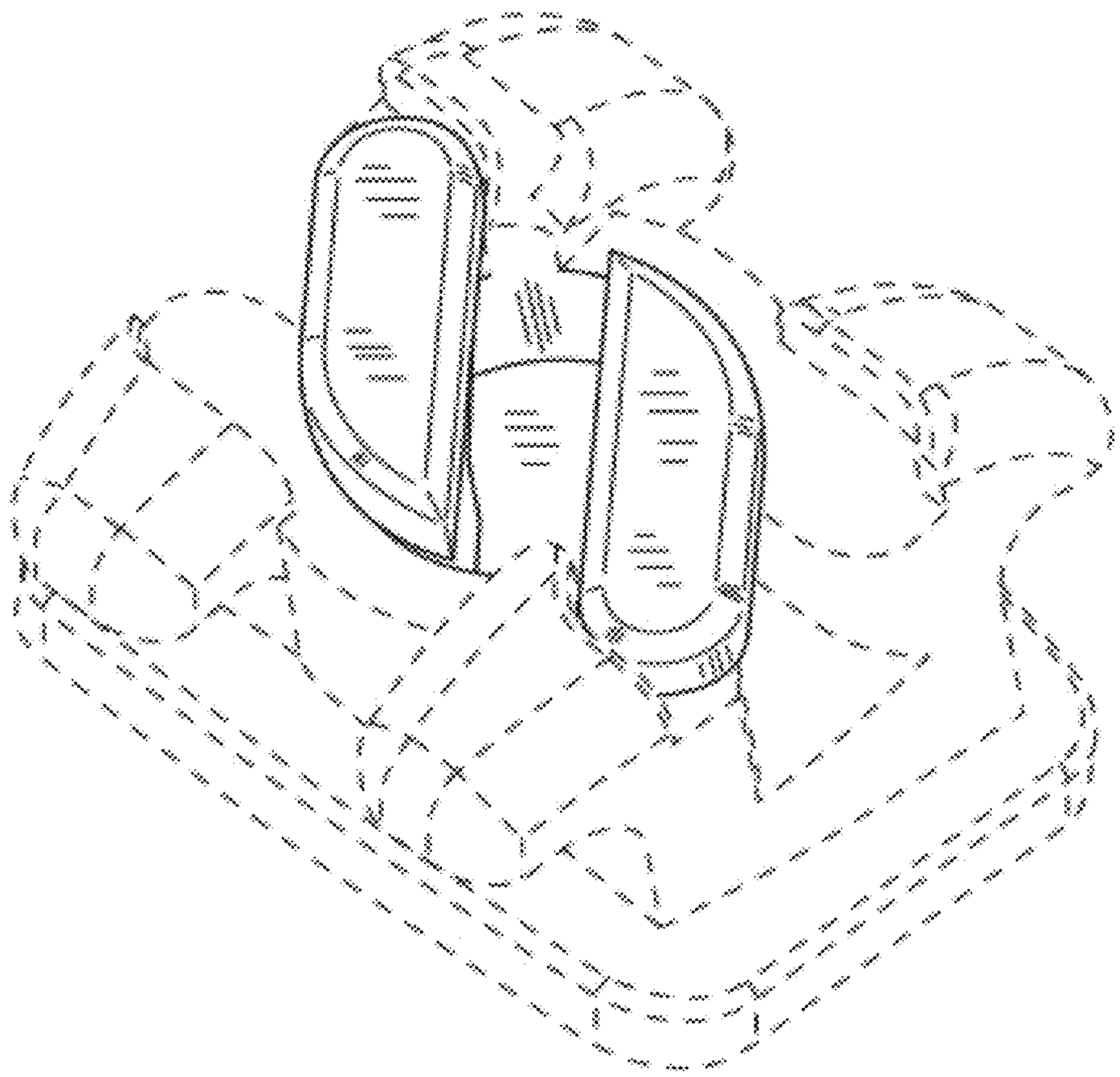

FIG.1

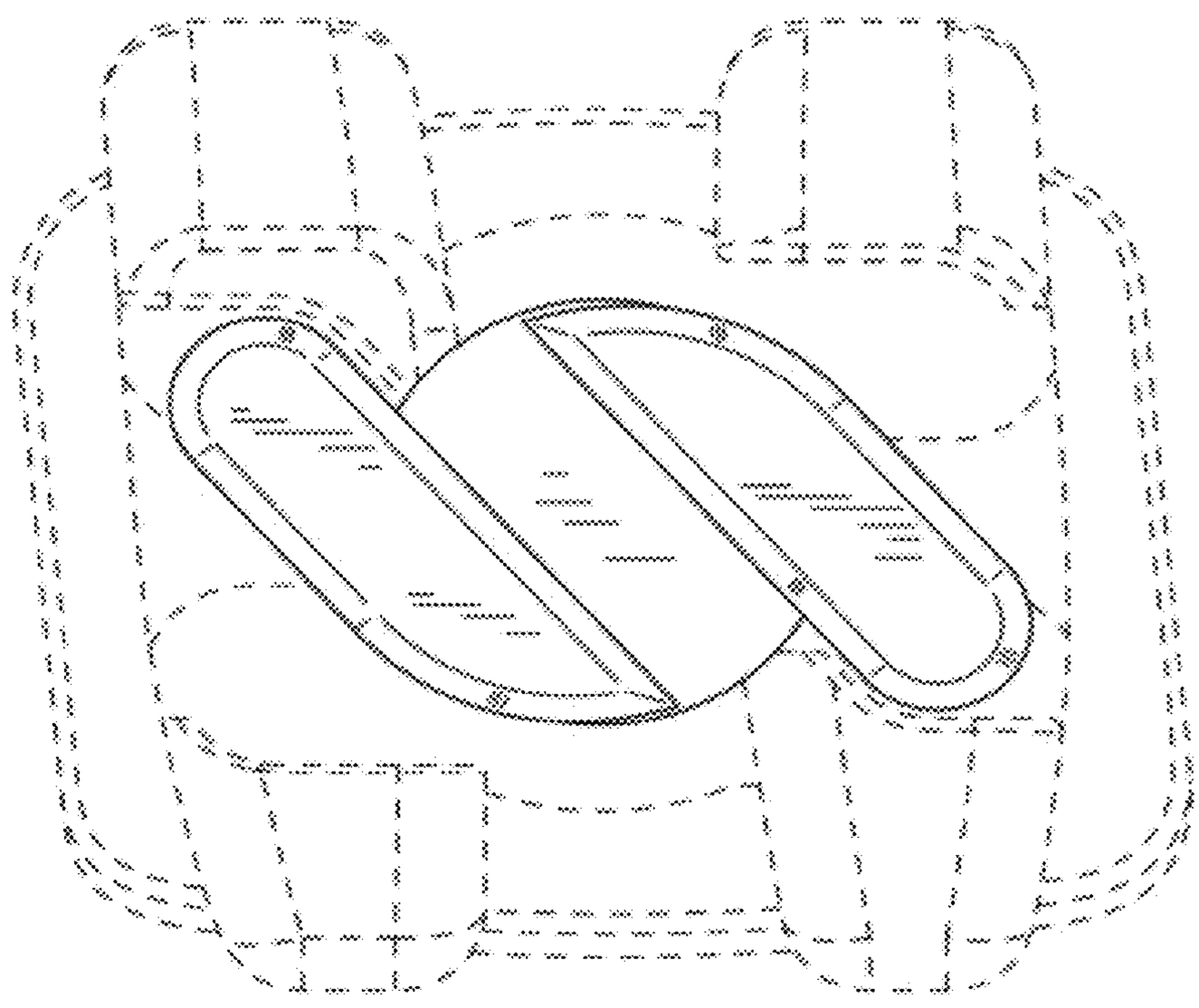

FIG.2

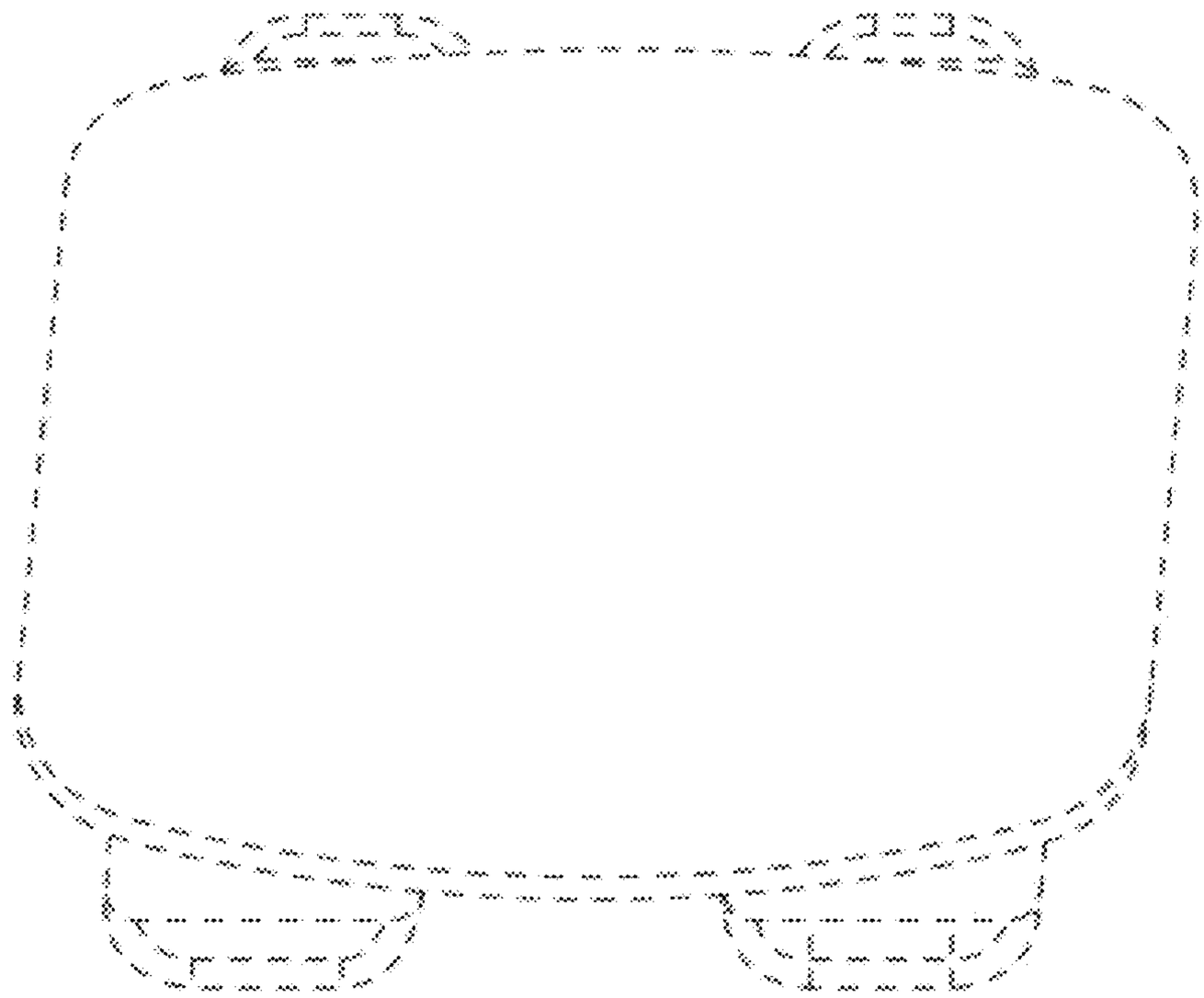

FIG.3

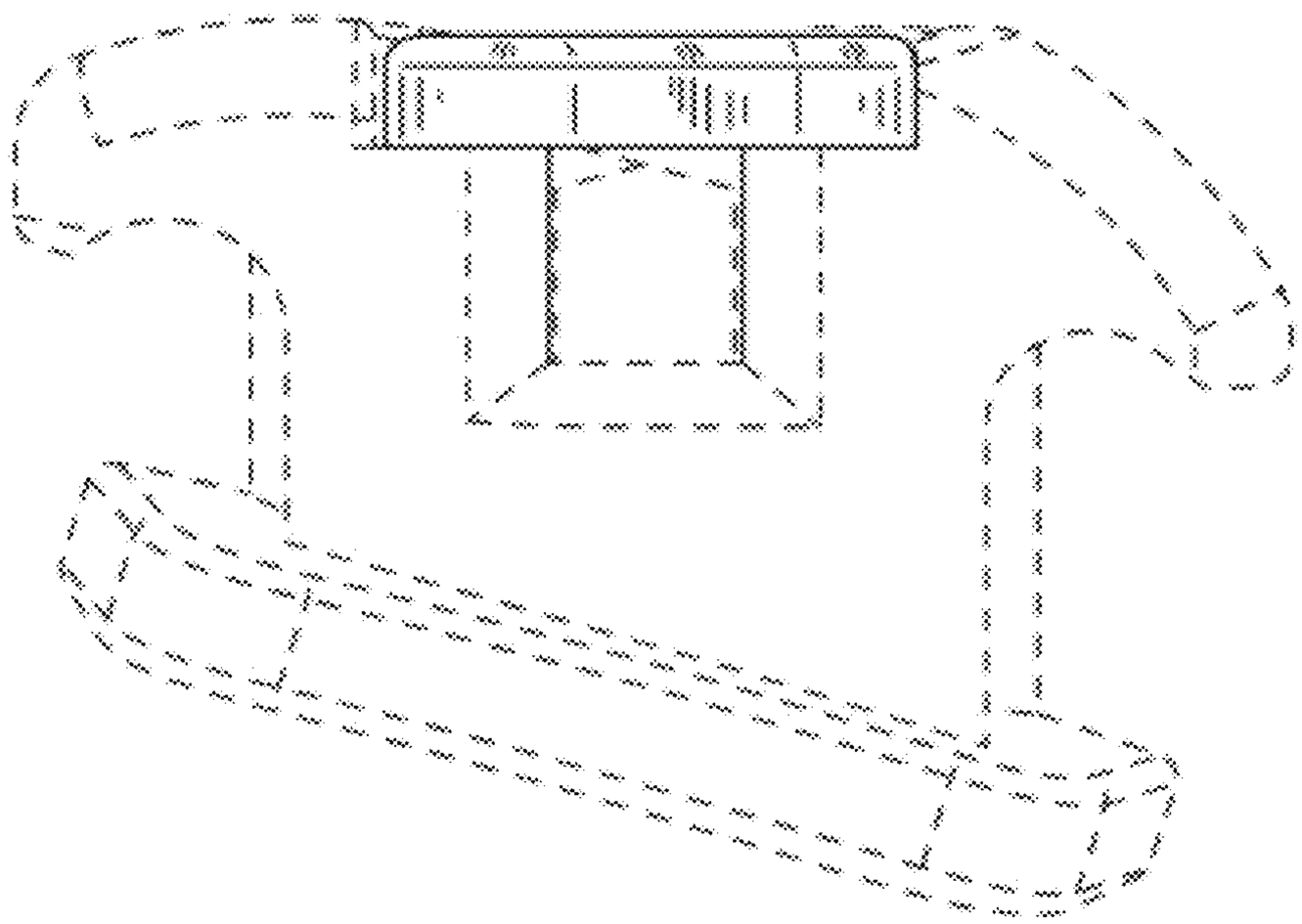

FIG.4

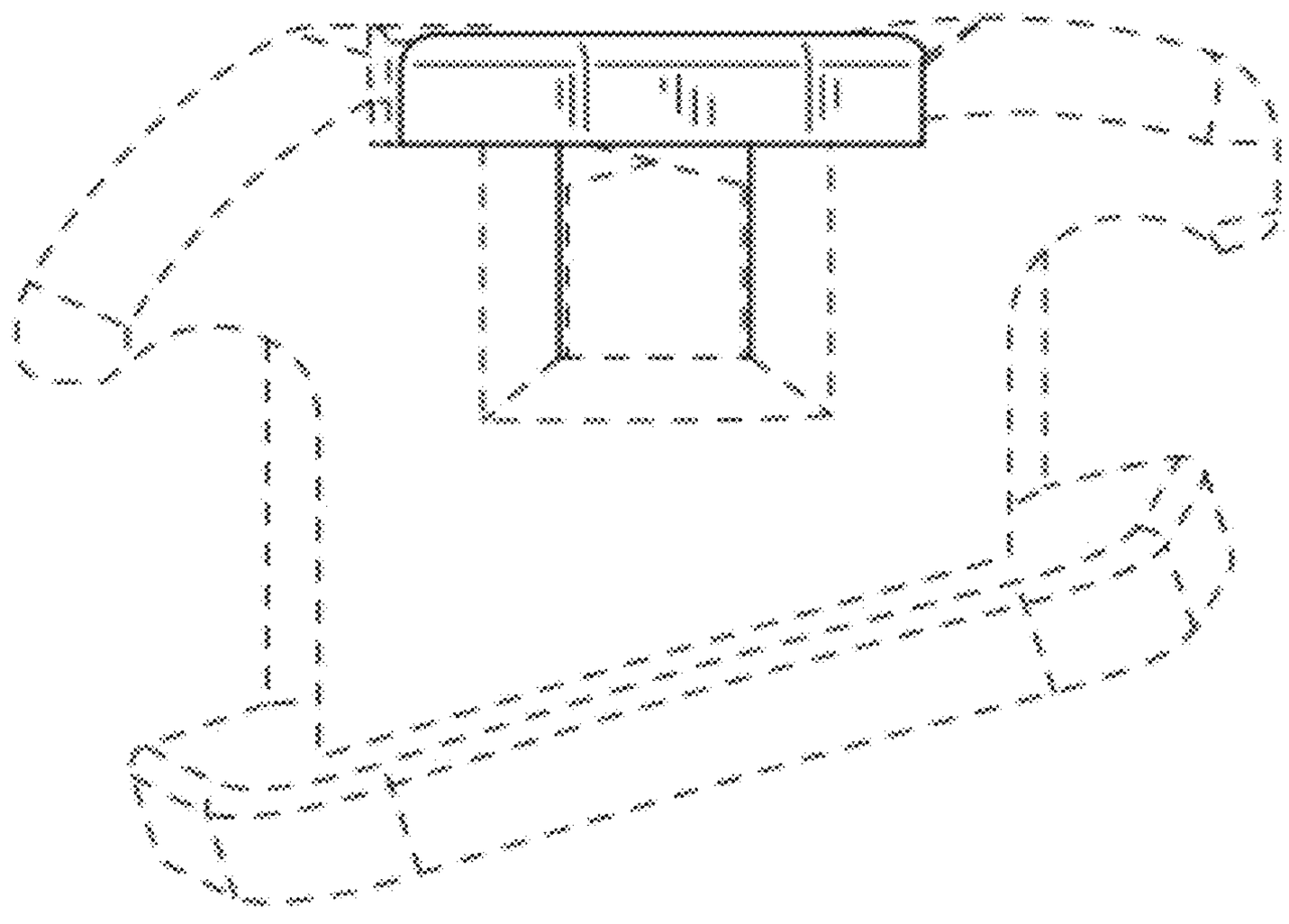

FIG.5

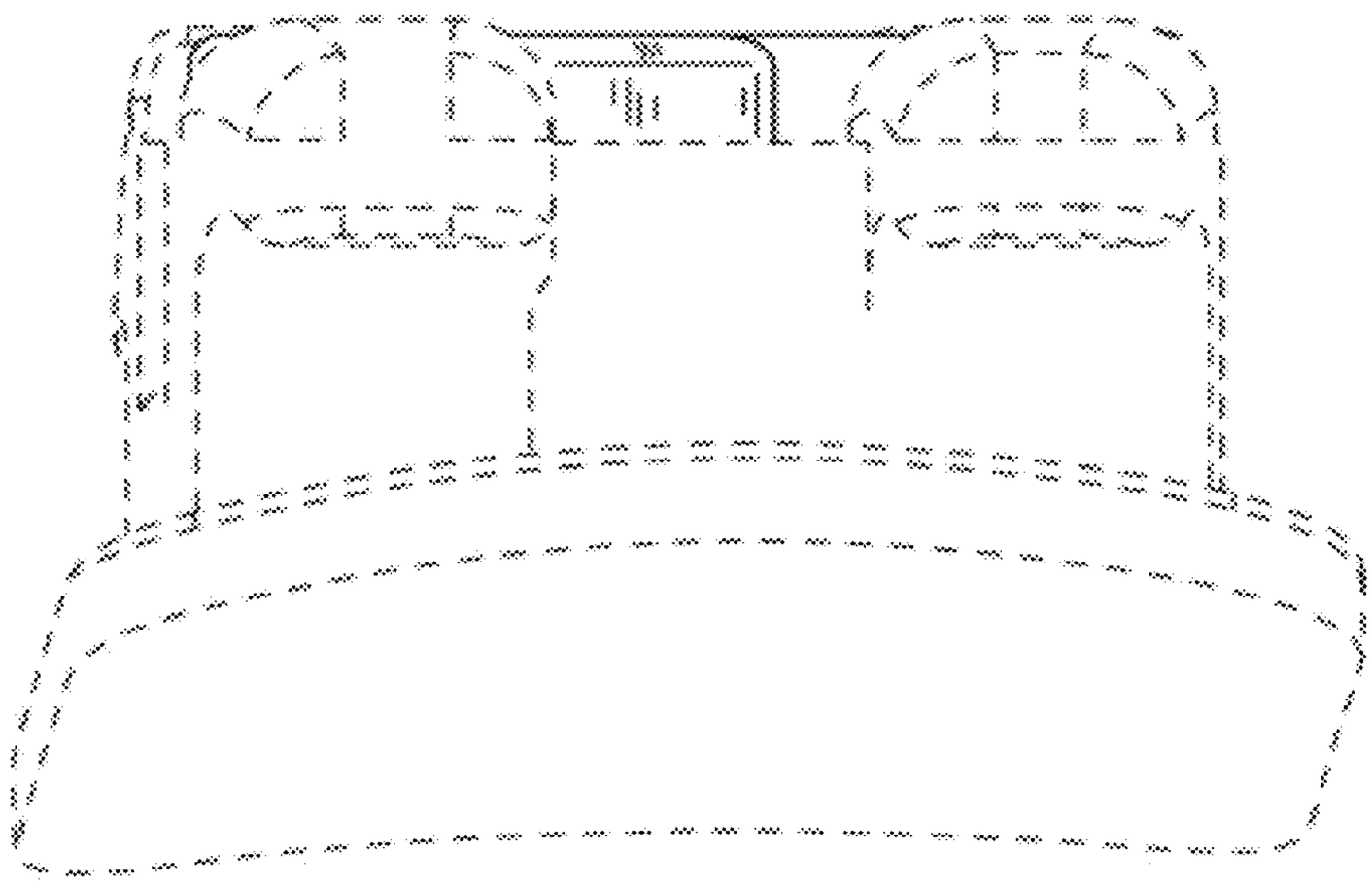

FIG.6

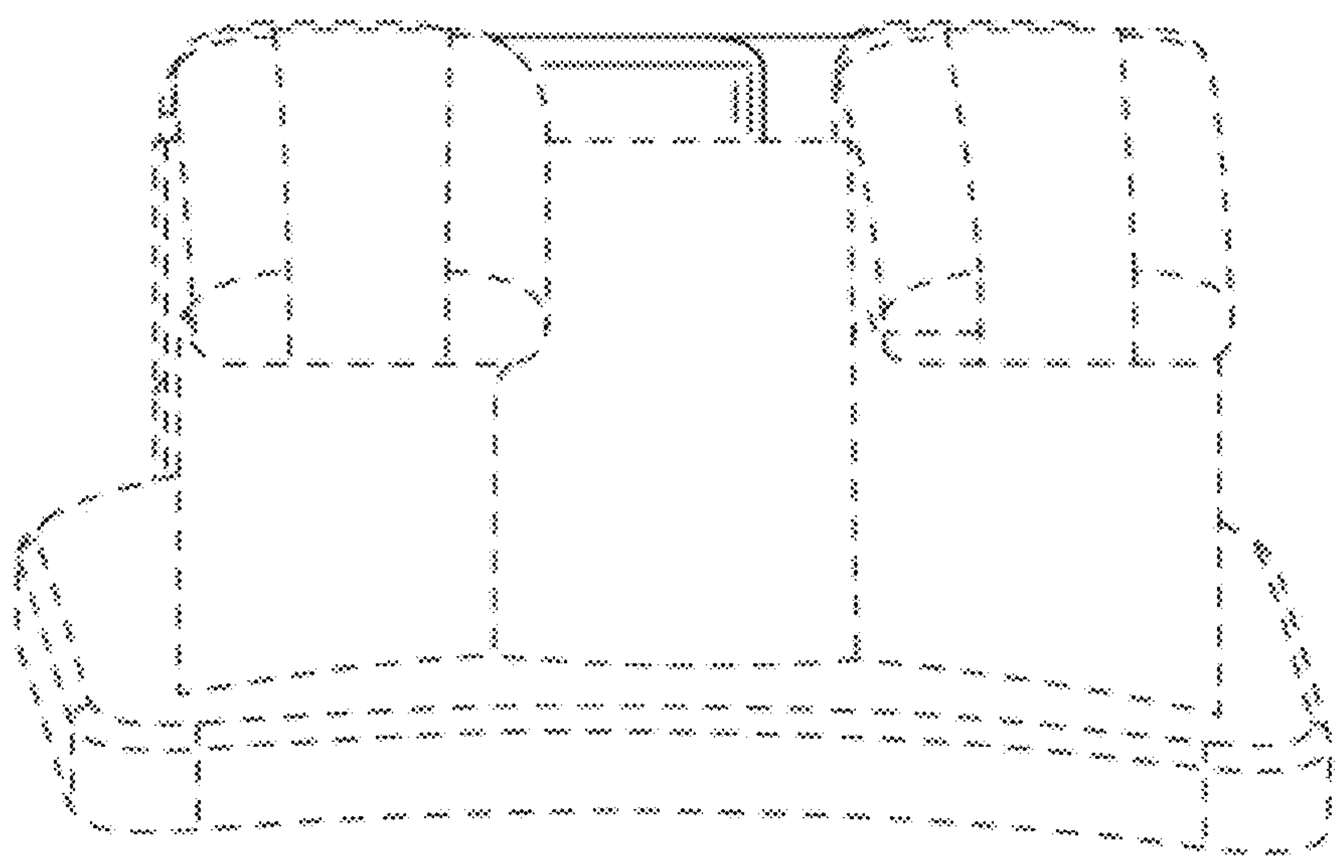

FIG.7

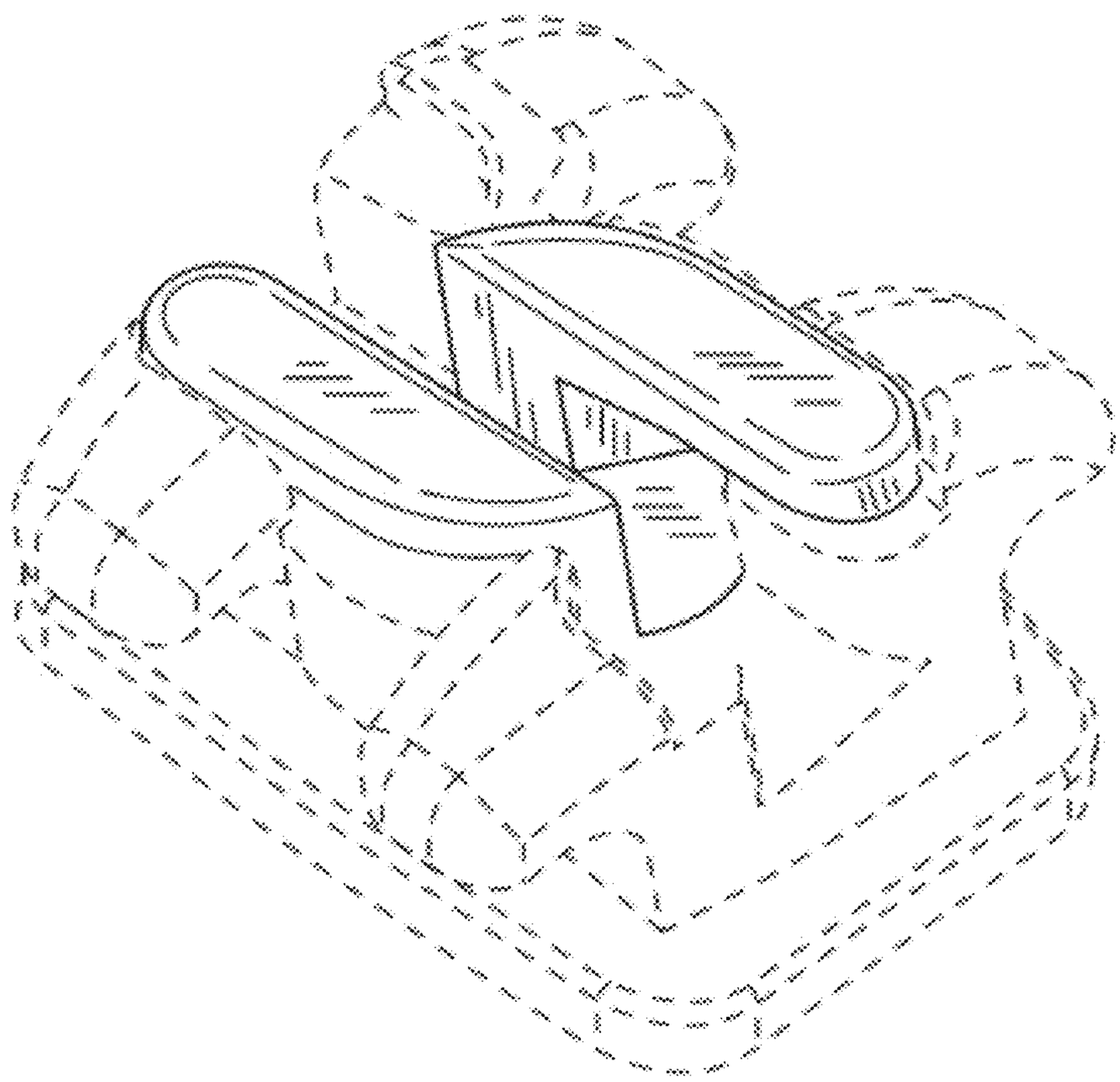

FIG.8

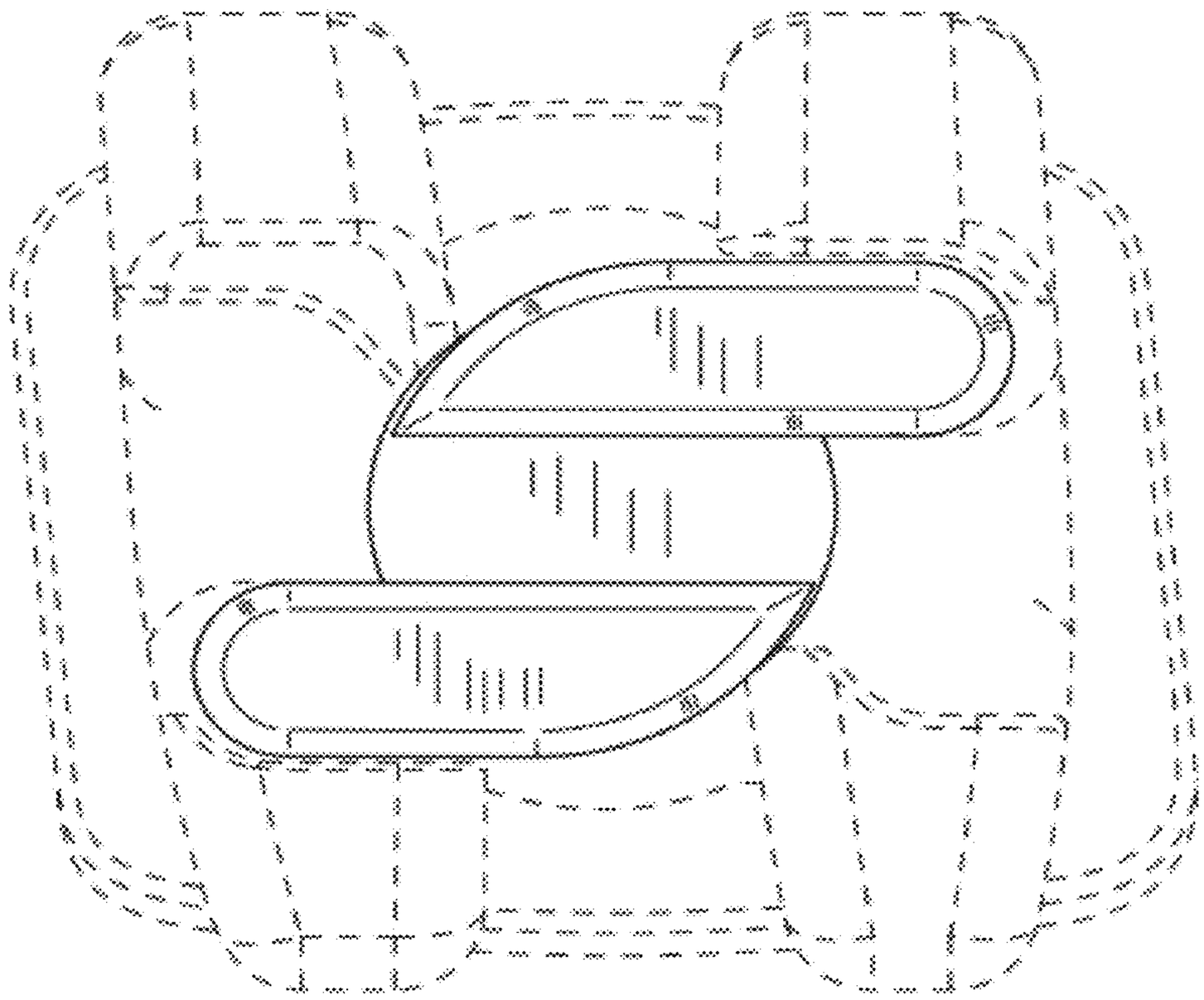

FIG.9

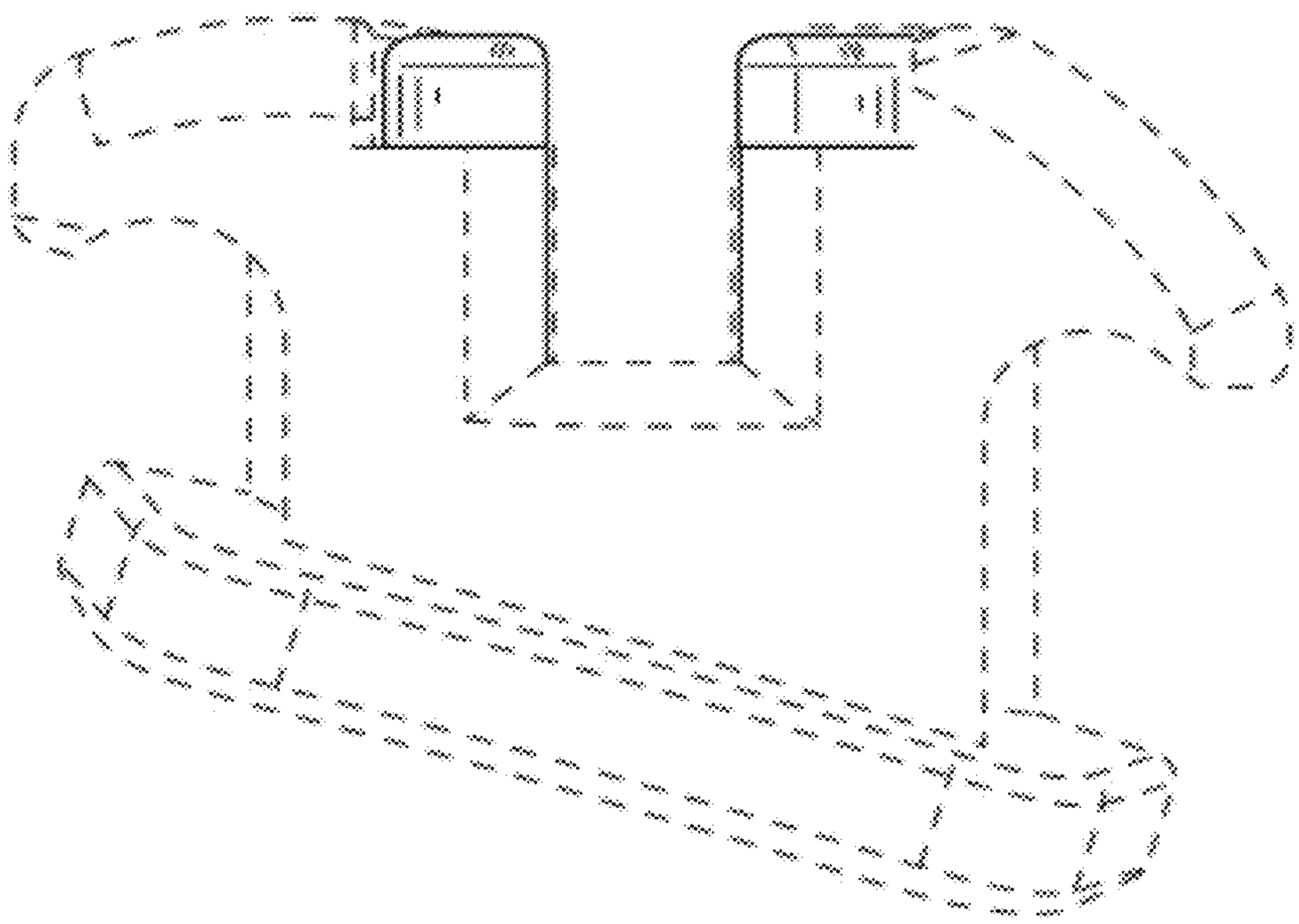

FIG.10

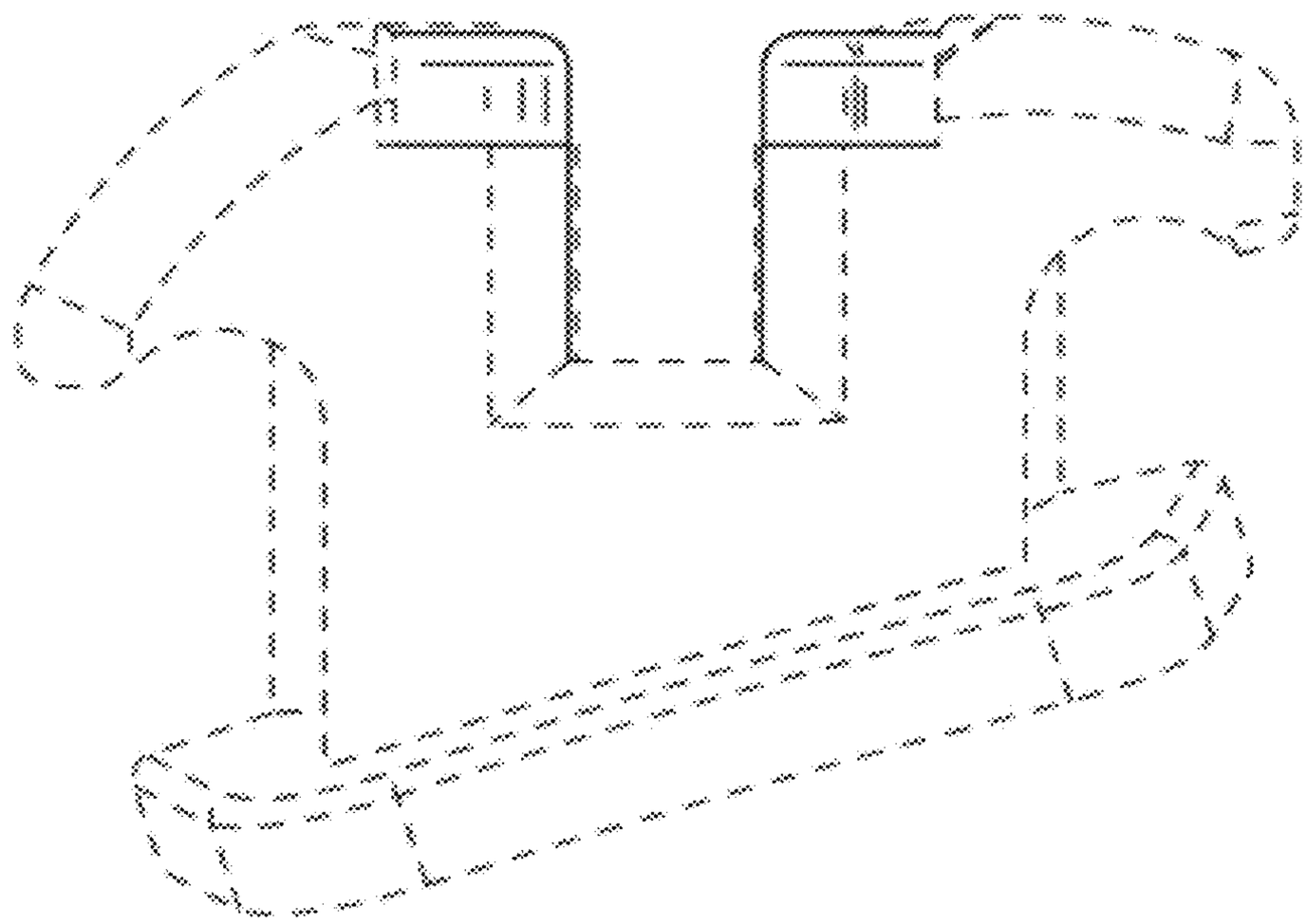

FIG.11

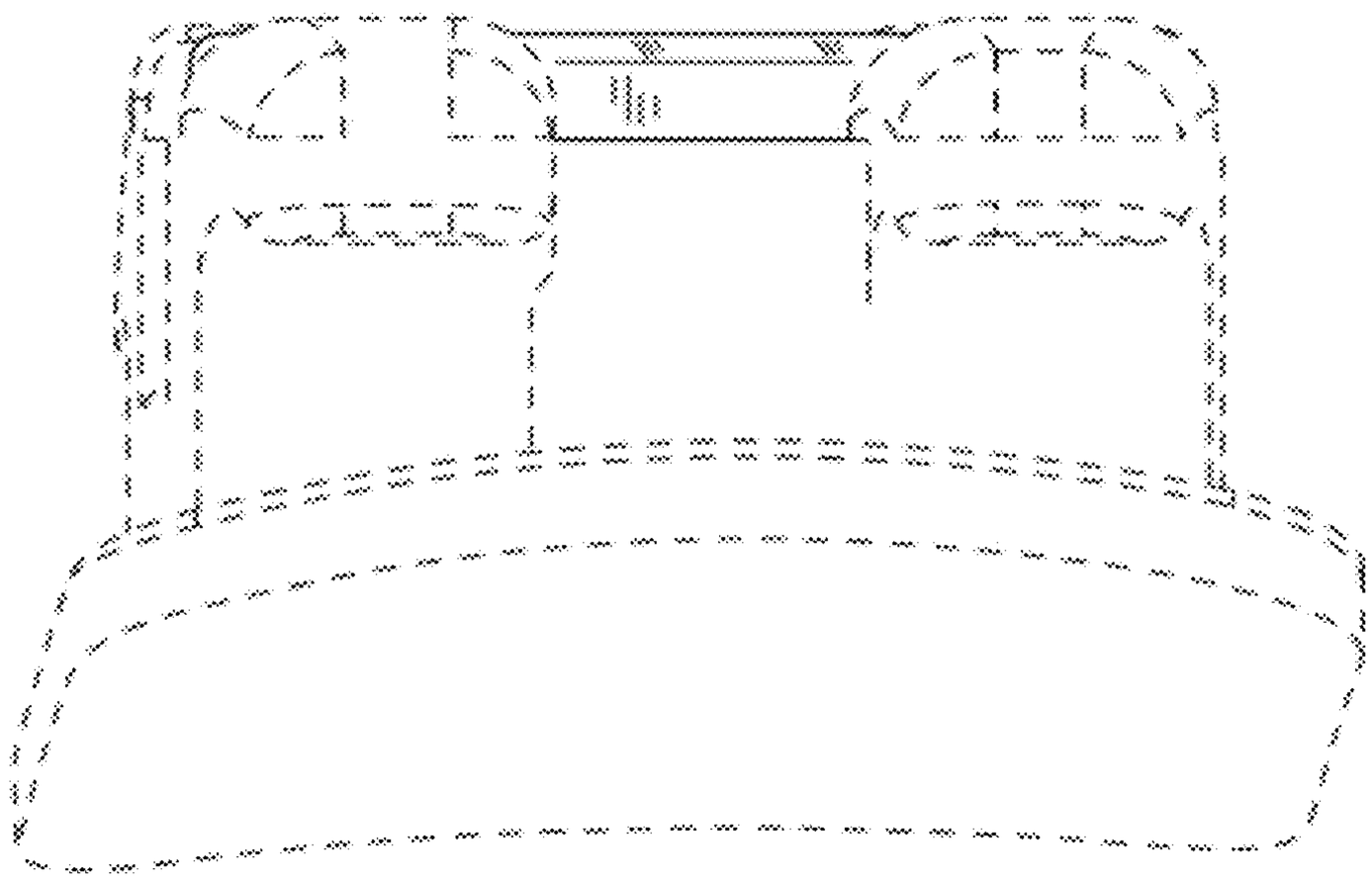

FIG.12

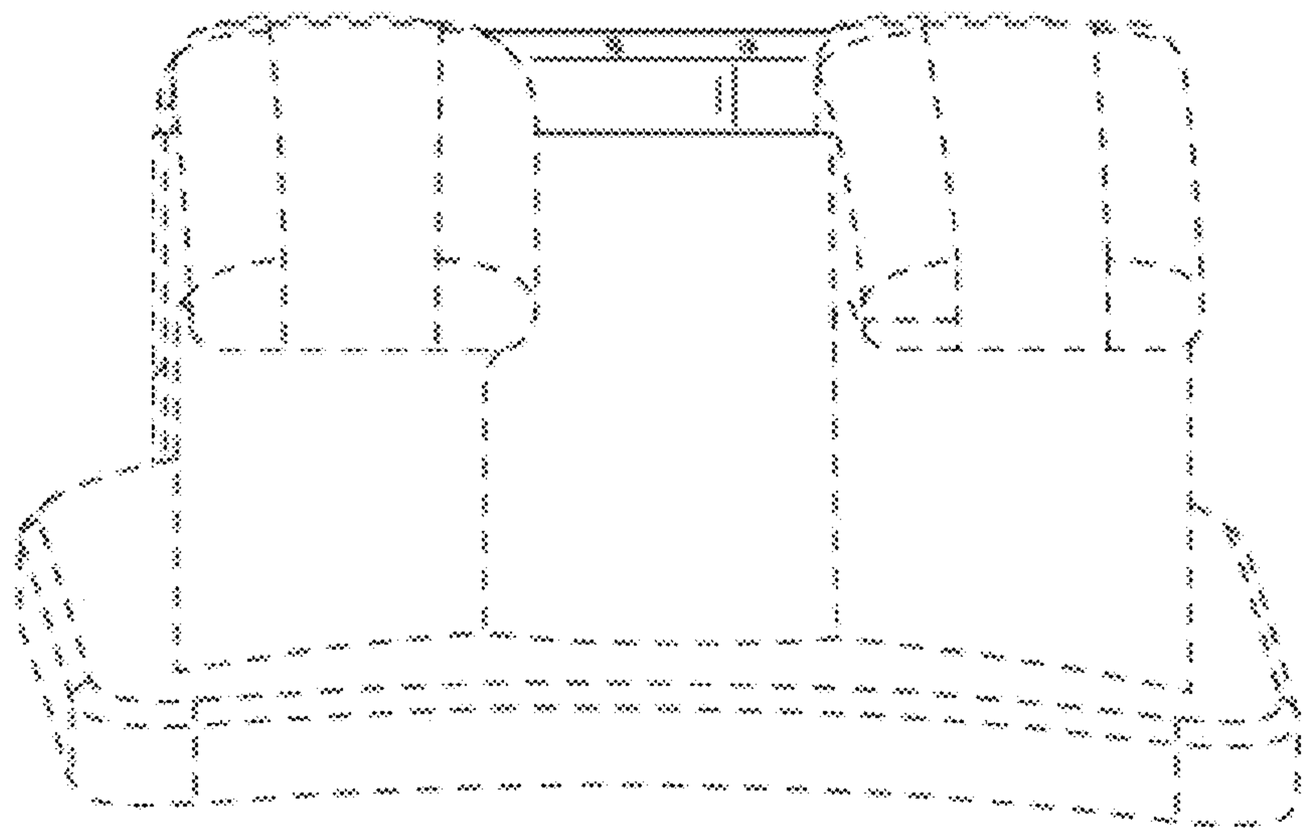

FIG.13