US00D656553S

(12) United States Design Patent

Blaskov et al.

(10) Patent No.: US D656,553 S
(45) Date of Patent: ** Mar. 27, 2012

(54) **SUPPORT FRAME FOR COCKPIT DRIVING SIMULATOR**

(75) Inventors: **Nikolay Blaskov**, Sofia (BG); **Miroslav Todorov**, London (GB)

(73) Assignee: **Home Racer LLC**, Davie, FL (US)

(**) Term: **14 Years**

(21) Appl. No.: **29/384,421**

(22) Filed: **Jan. 31, 2011**

(51) **LOC (9) Cl.** **21-01**
(52) **U.S. Cl.** **D21/326**; D21/333
(58) **Field of Classification Search** ..... D21/325, D21/329, 333, 369–371, 385; 273/148 B, 273/138.1; 463/1, 16–21, 25, 42, 46, 47
See application file for complete search history.

(56) **References Cited**

U.S. PATENT DOCUMENTS

5,054,771	A	*	10/1991	Mansfield	463/36
5,437,453	A	*	8/1995	Hineman	463/38
D384,705	S	*	10/1997	Muraki et al.	D21/326
5,911,634	A	*	6/1999	Nidata et al.	472/59
6,044,772	A	*	4/2000	Gaudette et al.	108/43
6,083,106	A	*	7/2000	McDowell	463/46
6,132,314	A	*	10/2000	Aiki	463/37
D446,263	S	*	8/2001	Heys	D21/477
6,283,546	B1	*	9/2001	Hill	297/271.1
D467,977	S	*	12/2002	Gatto et al.	D21/326
D527,054	S	*	8/2006	Brase et al.	D21/326
D544,923	S	*	6/2007	Brase et al.	D21/326

* cited by examiner

Primary Examiner — Prabhakar Deshmukh
(74) *Attorney, Agent, or Firm* — Panitch Schwarze Belisario & Nadel LLP

(57) **CLAIM**

The ornamental design for a support frame for a cockpit driving simulator, as shown and described.

DESCRIPTION

FIG. **1** is a front, right perspective view of a support frame for a cockpit driving simulator showing our new design;
FIG. **2** is a front perspective view thereof;
FIG. **3** is a rear perspective view thereof;
FIG. **4** is a left perspective view thereof;
FIG. **5** is a right perspective view thereof;
FIG. **6** is a top plan view thereof;
FIG. **7** is a bottom plan view thereof;
FIG. **8** is a front, right perspective view of a second embodiment of a support frame for a cockpit driving simulator thereof, with a gear shift mount positioned on the left;
FIG. **9** is front perspective view of FIG. **7**;
FIG. **10** is rear perspective view of FIG. **7**;
FIG. **11** is a left perspective view of FIG. **7**;
FIG. **12** is a right perspective view of FIG. **7**;
FIG. **13** is top plan view of FIG. **7**;
FIG. **14** is bottom plan view of FIG. **7**;
FIG. **15** is a front, right perspective view of a third embodiment of a support frame for a cockpit driving simulator thereof, with a gear shift mount positioned on the right;
FIG. **16** is affront perspective view of FIG. **15**;
FIG. **17** is a rear perspective view of FIG. **15**;
FIG. **18** is a left perspective view of FIG. **15**;
FIG. **19** is a right perspective view of FIG. **15**;
FIG. **20** is a top plan view of FIG. **15**; and,
FIG. **21** is a bottom plan view of FIG. **15**.
The broken lines showing of environmental seat in various figures is for illustrative purpose only and form no part of the claimed design.

1 Claim, 18 Drawing Sheets

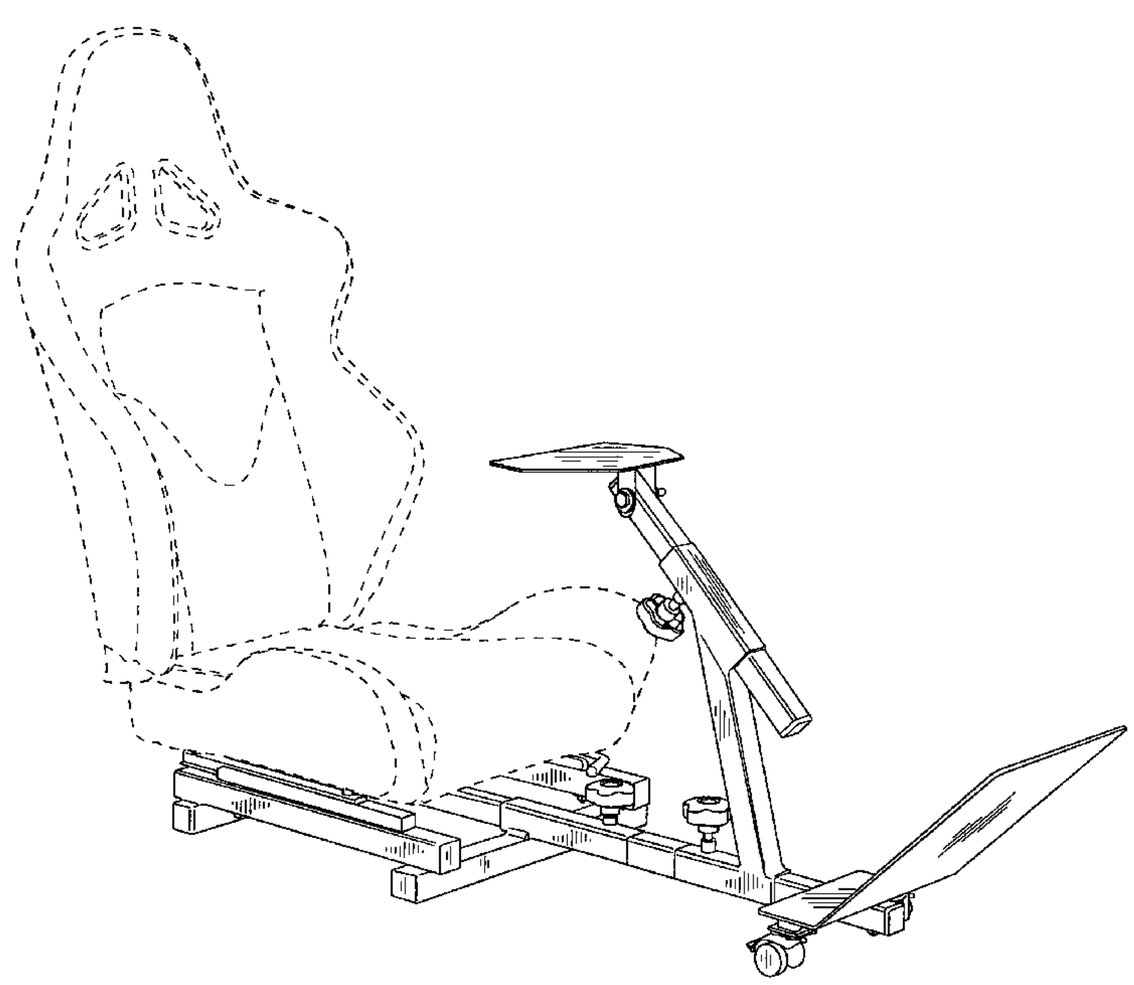

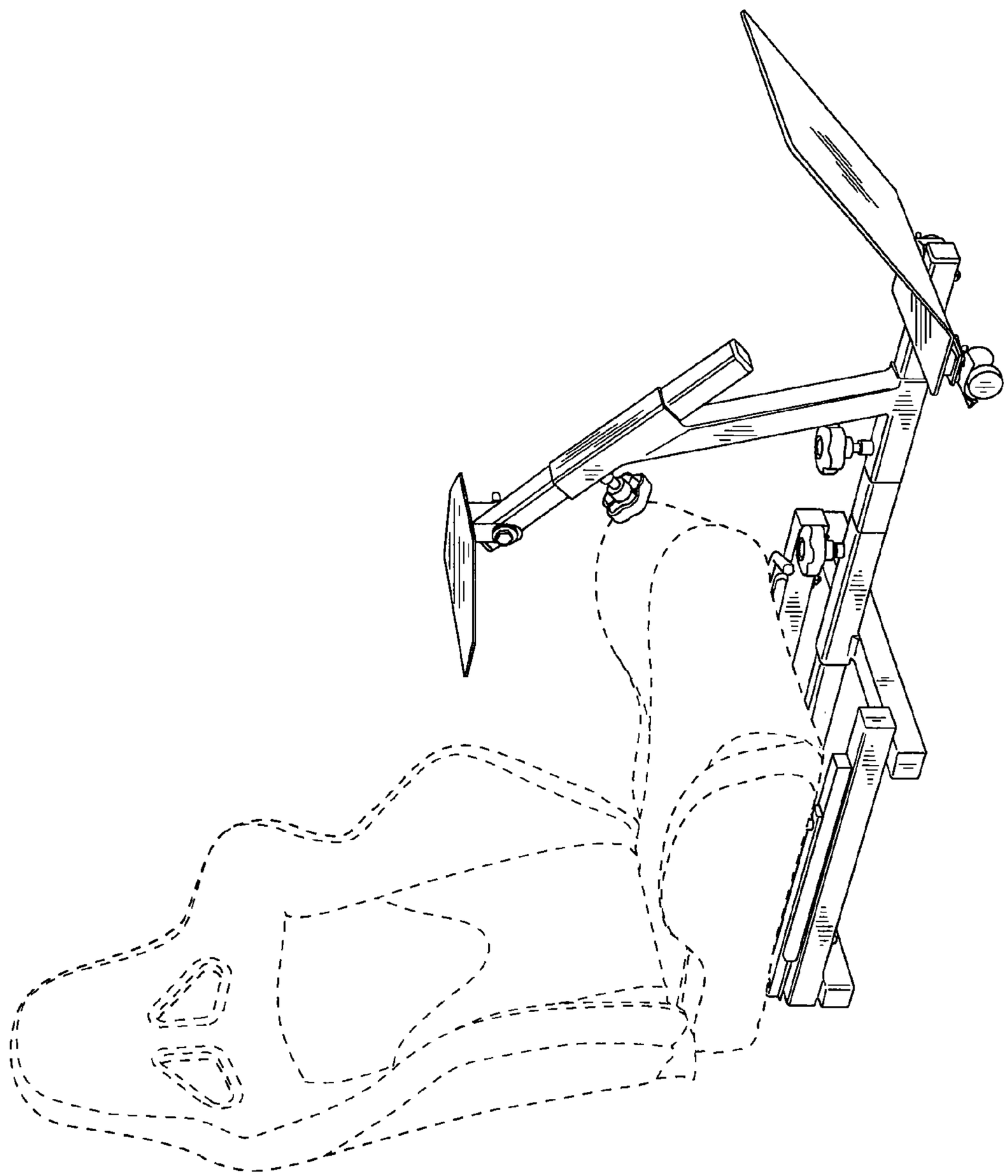

FIG. 1

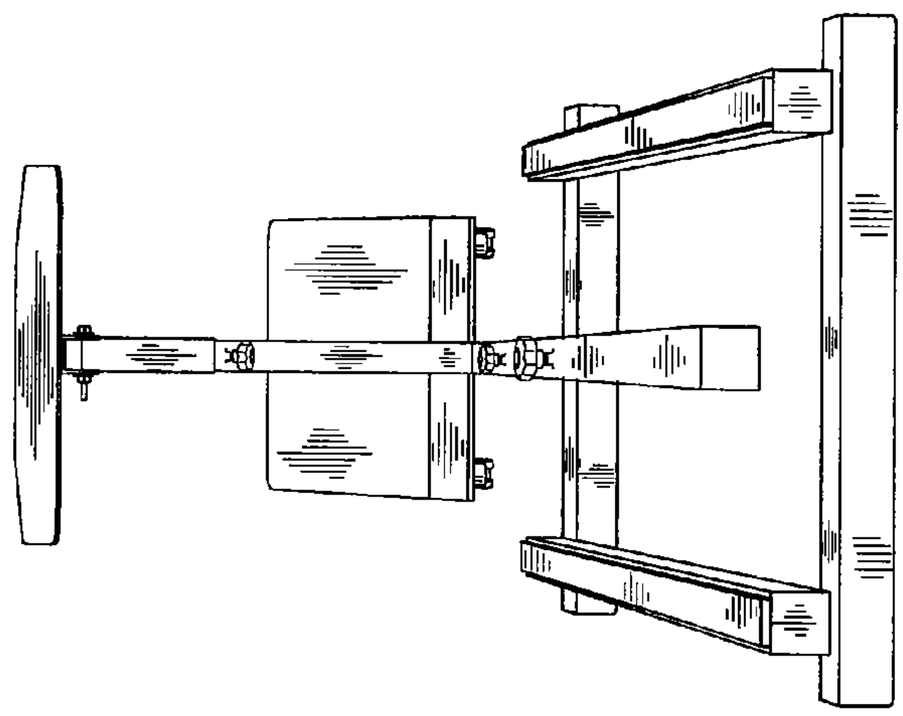

FIG. 3

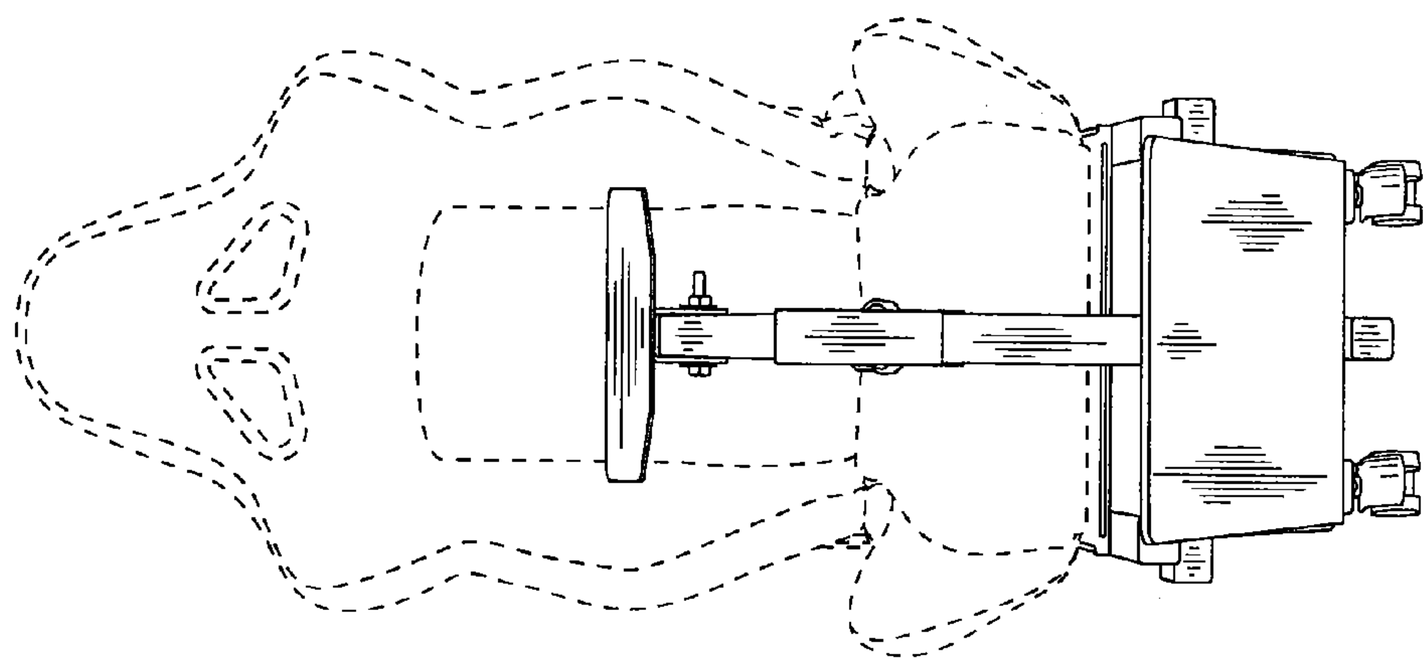

FIG. 2

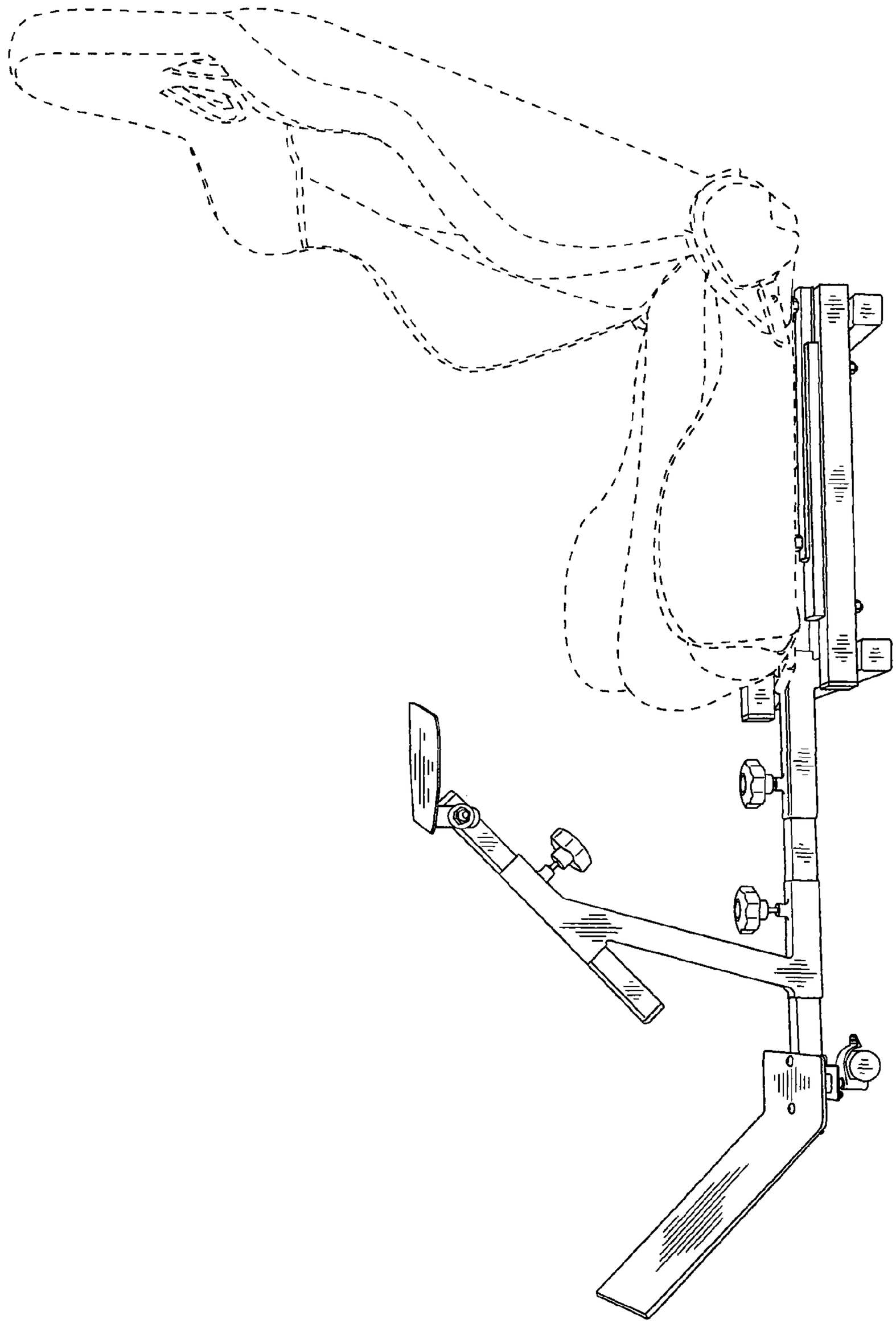

FIG. 4

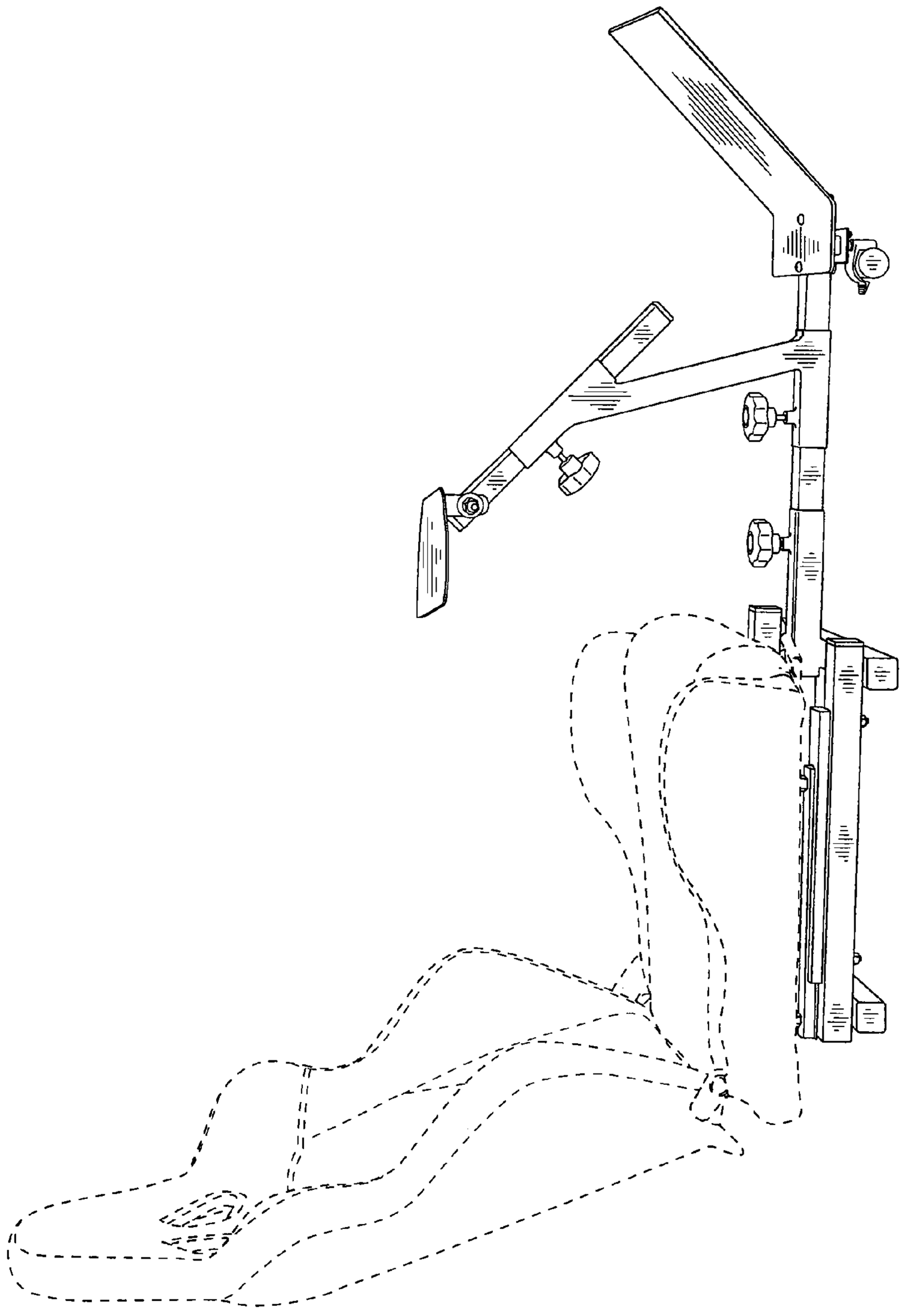

FIG. 5

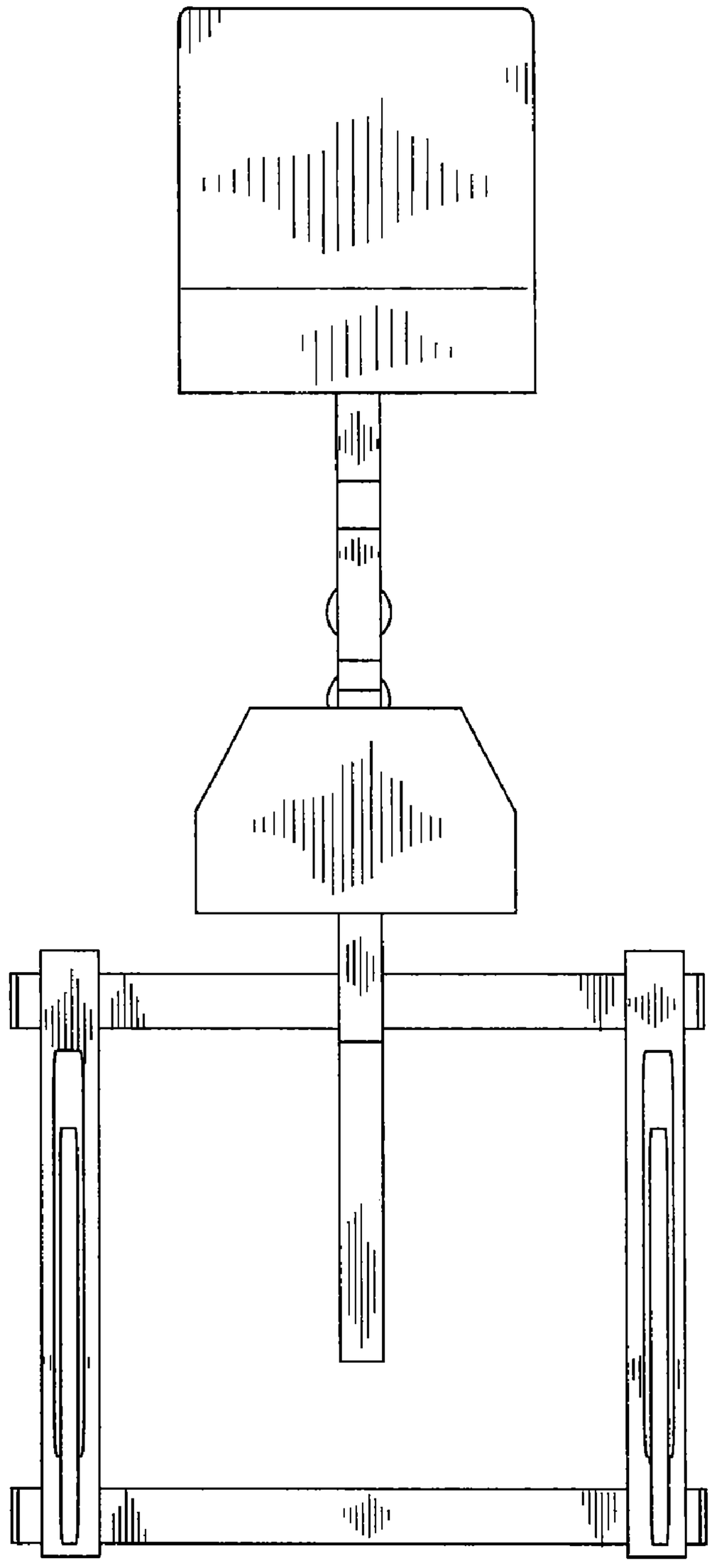

FIG. 6

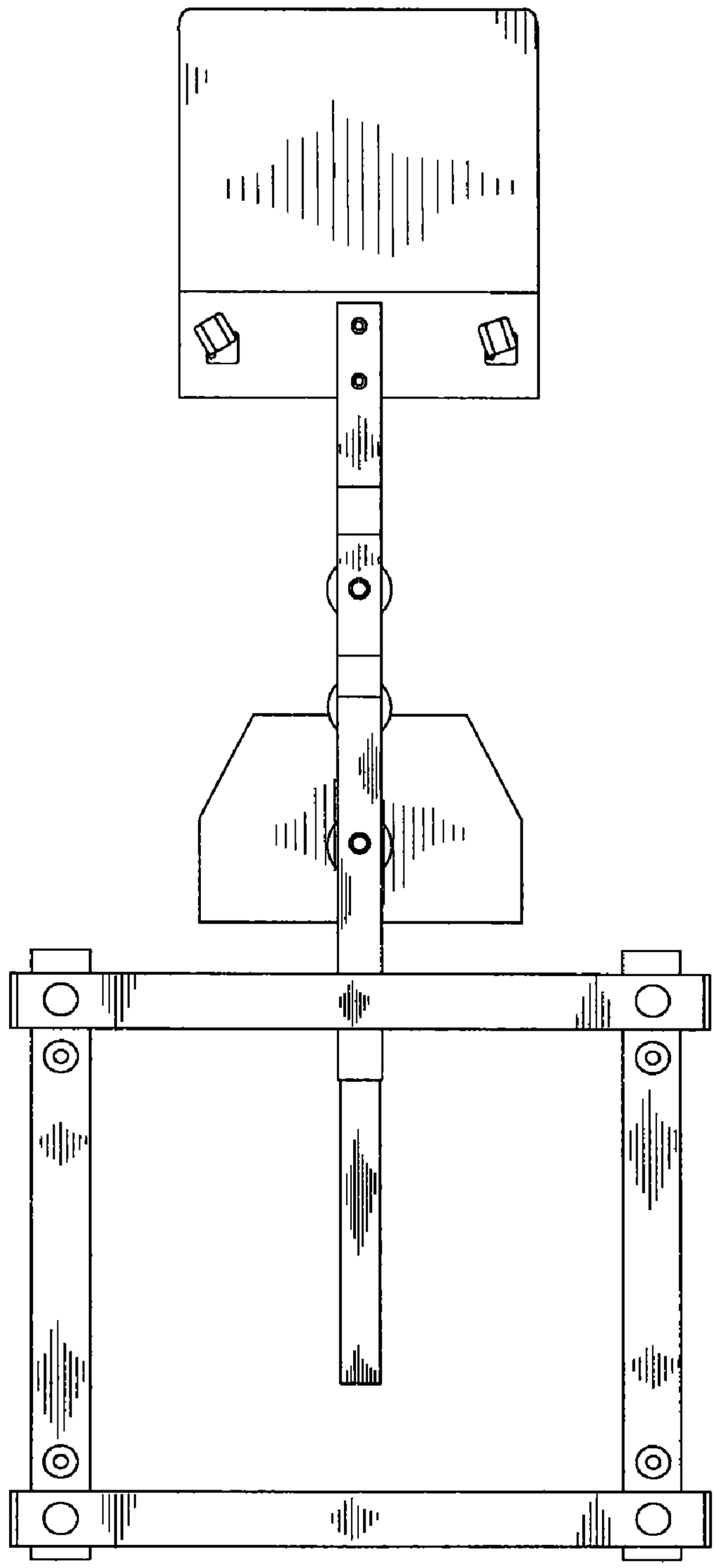

FIG. 7

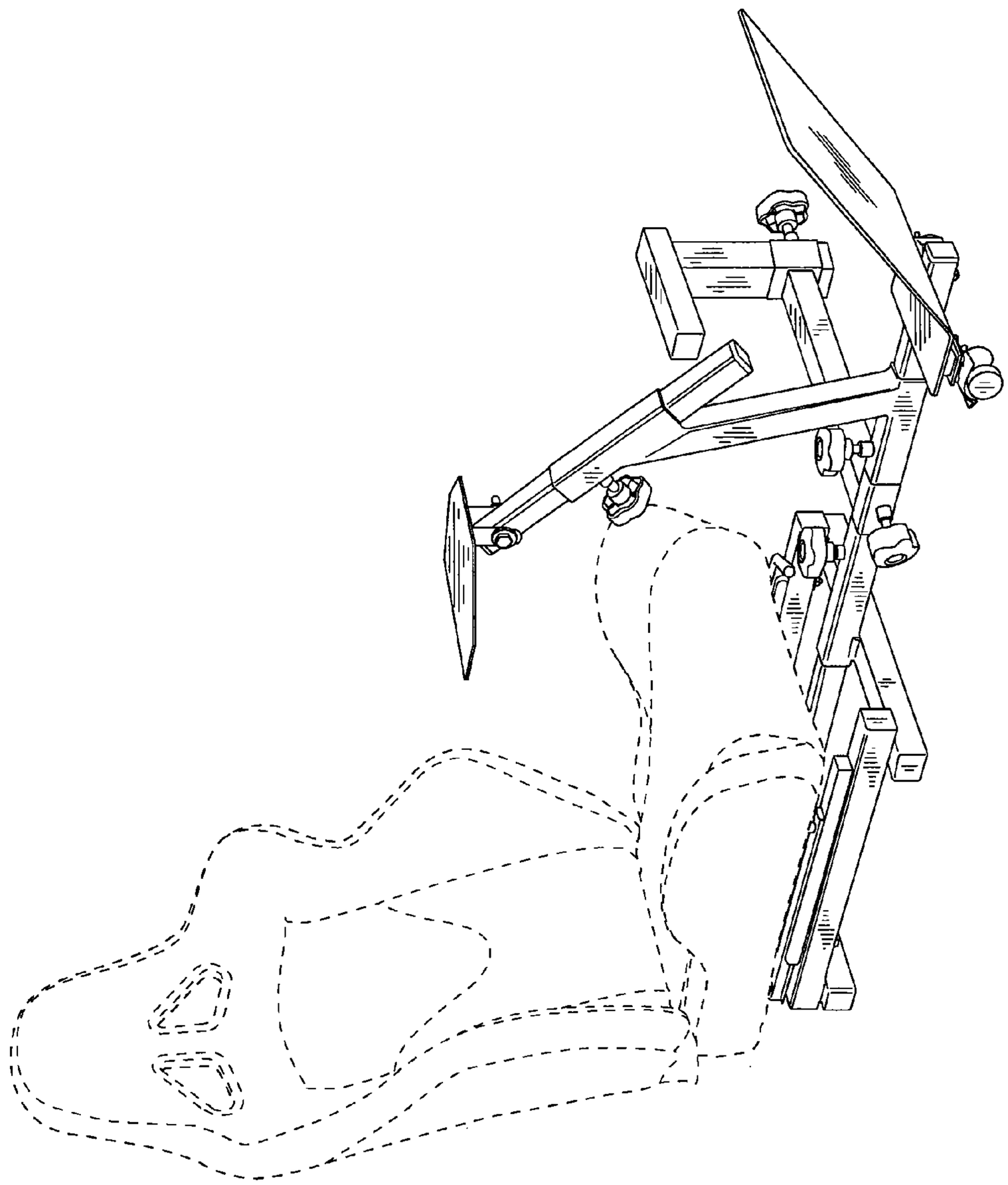

FIG. 8

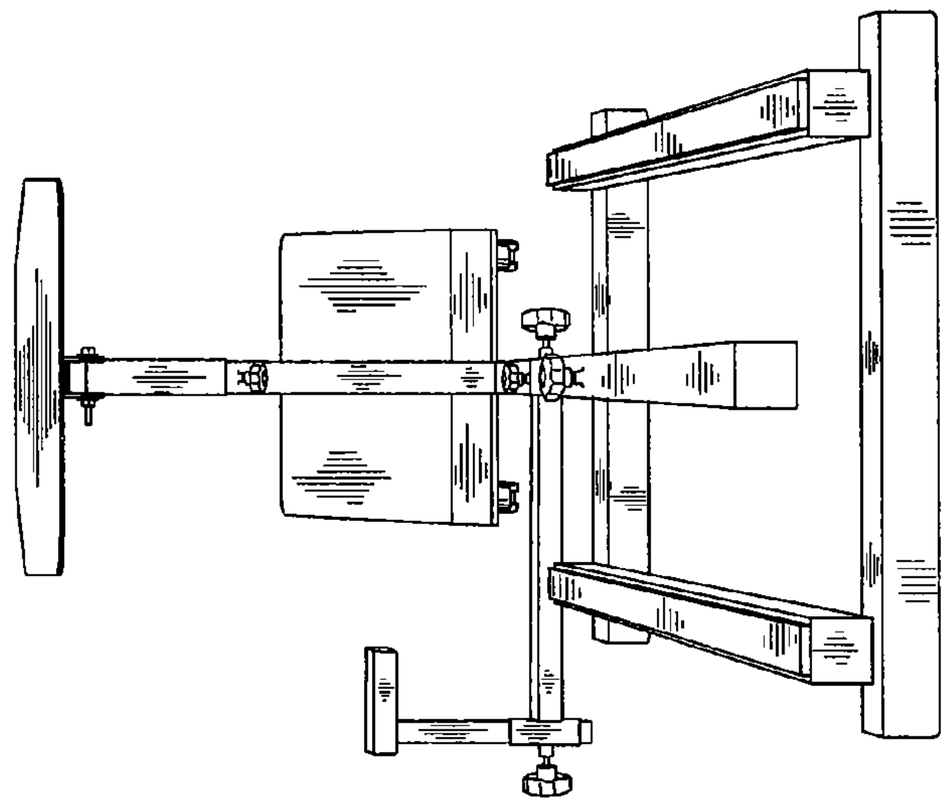

FIG. 10

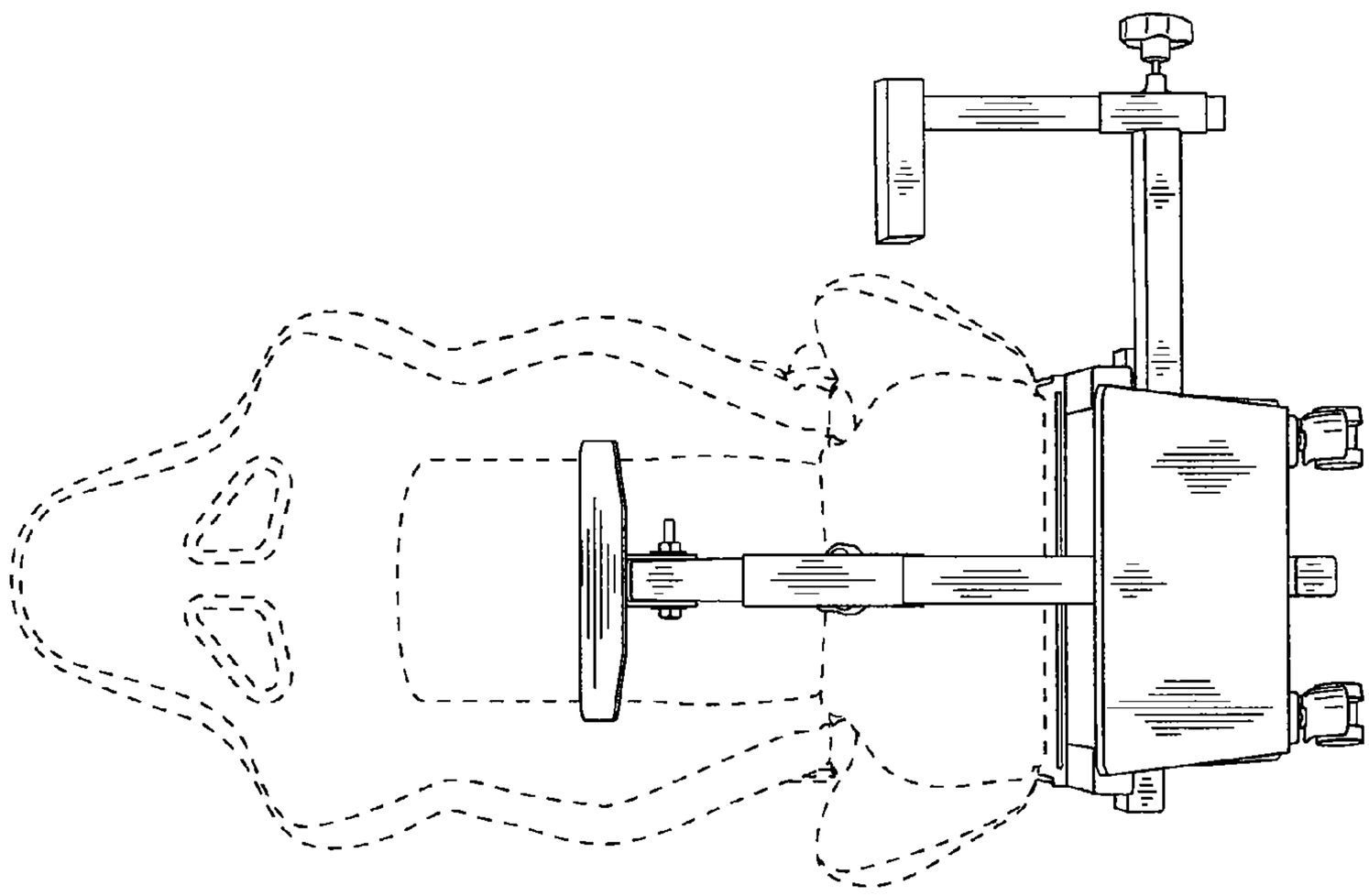

FIG. 9

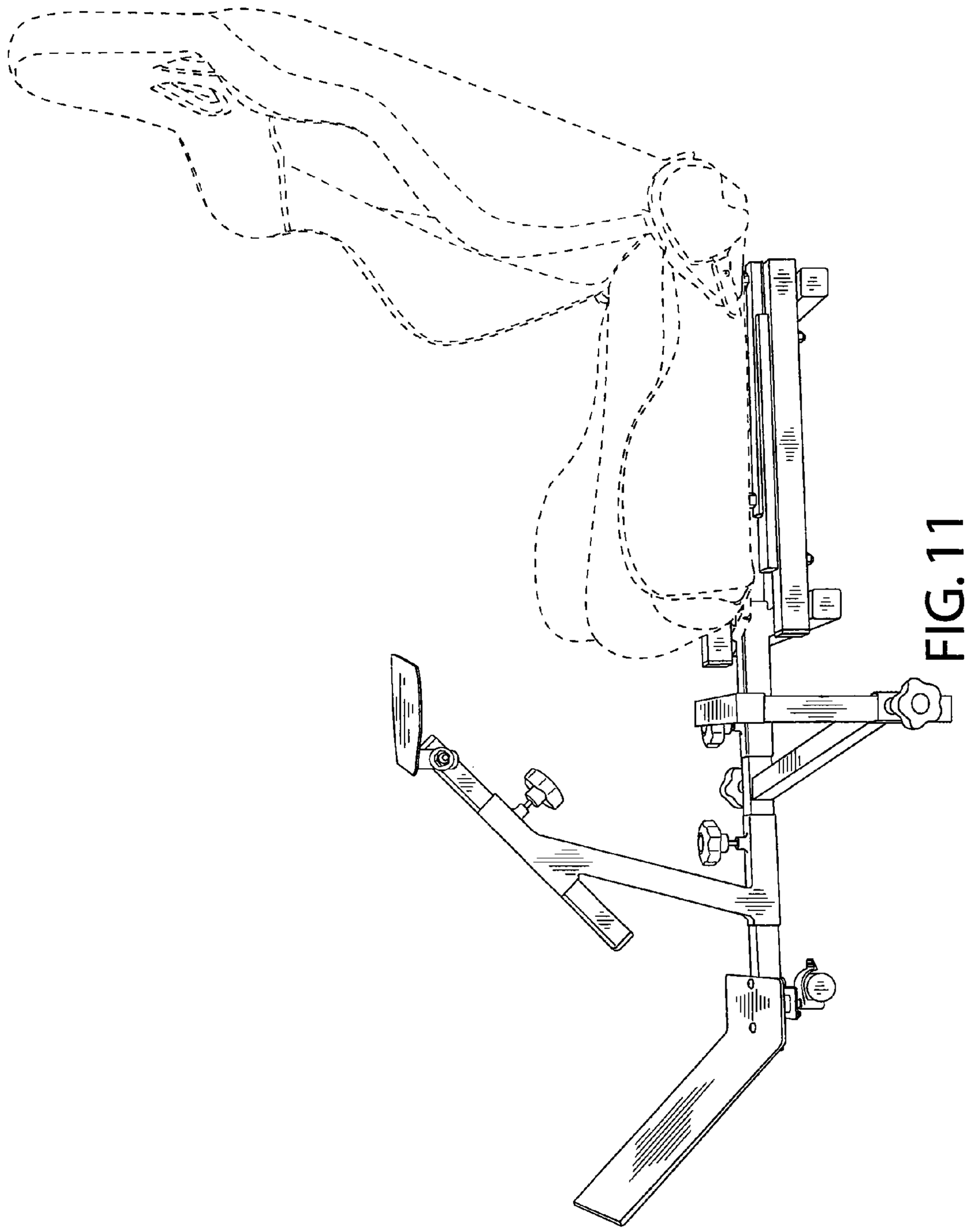

FIG. 11

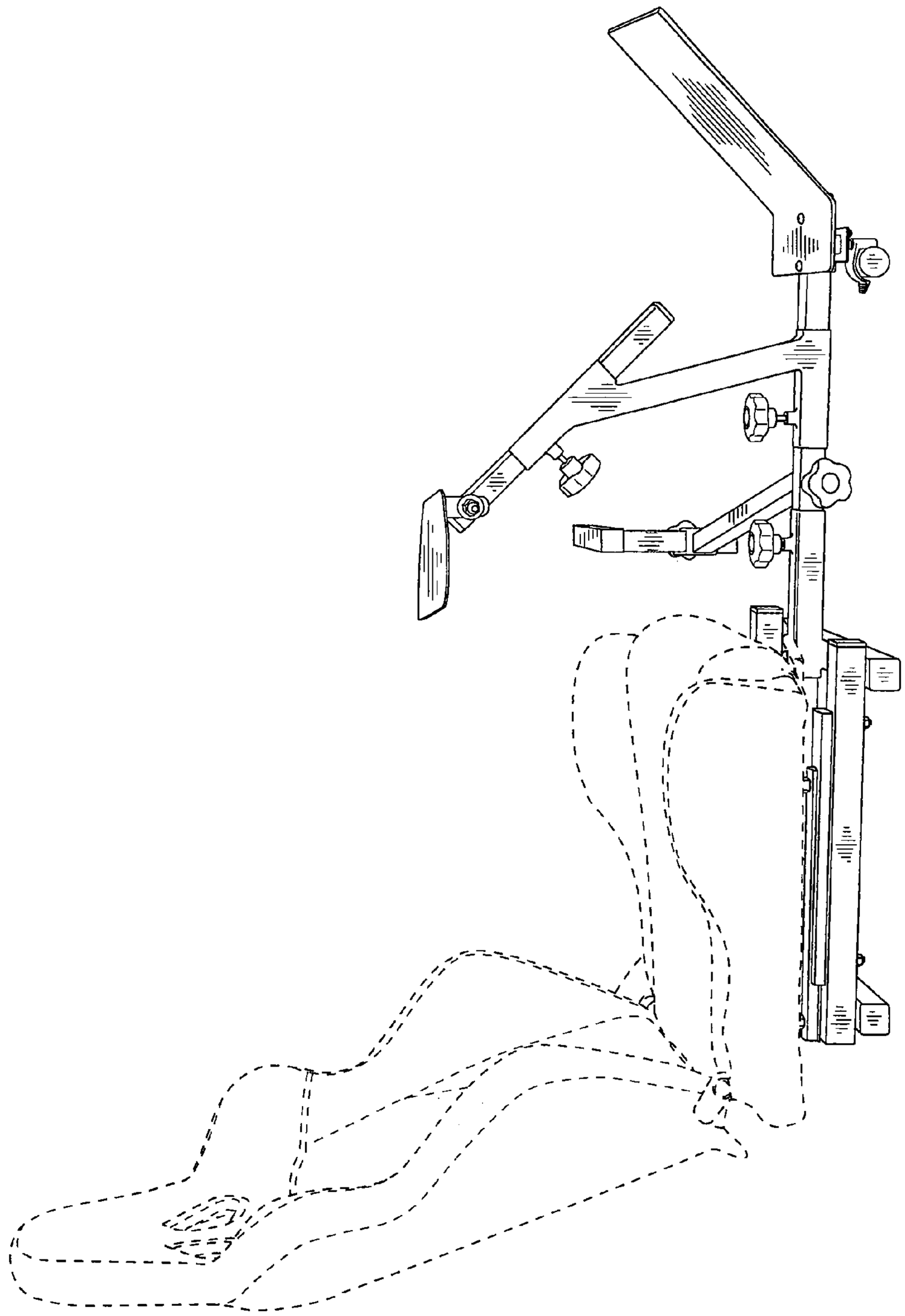

FIG. 12

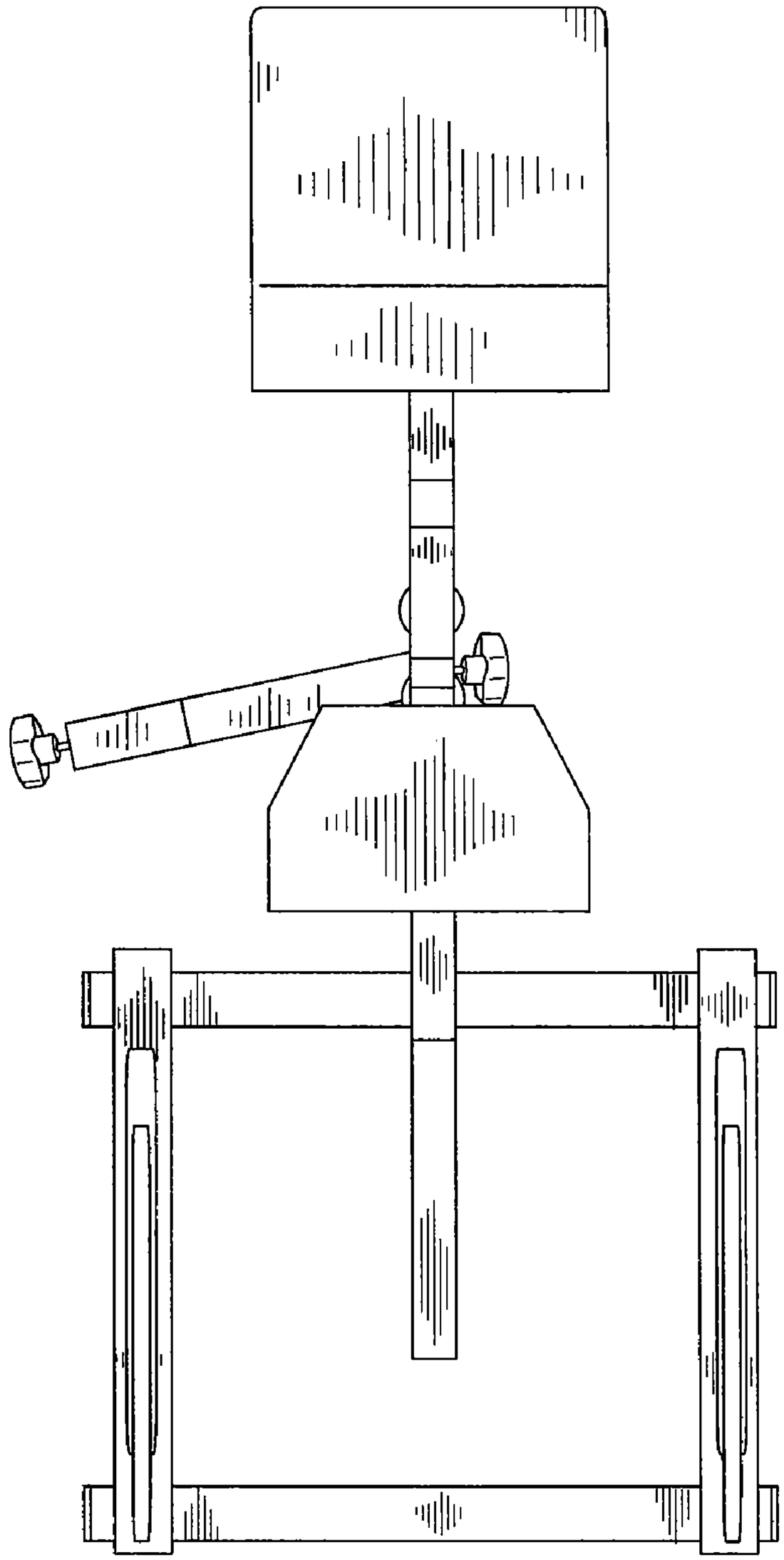

FIG. 13

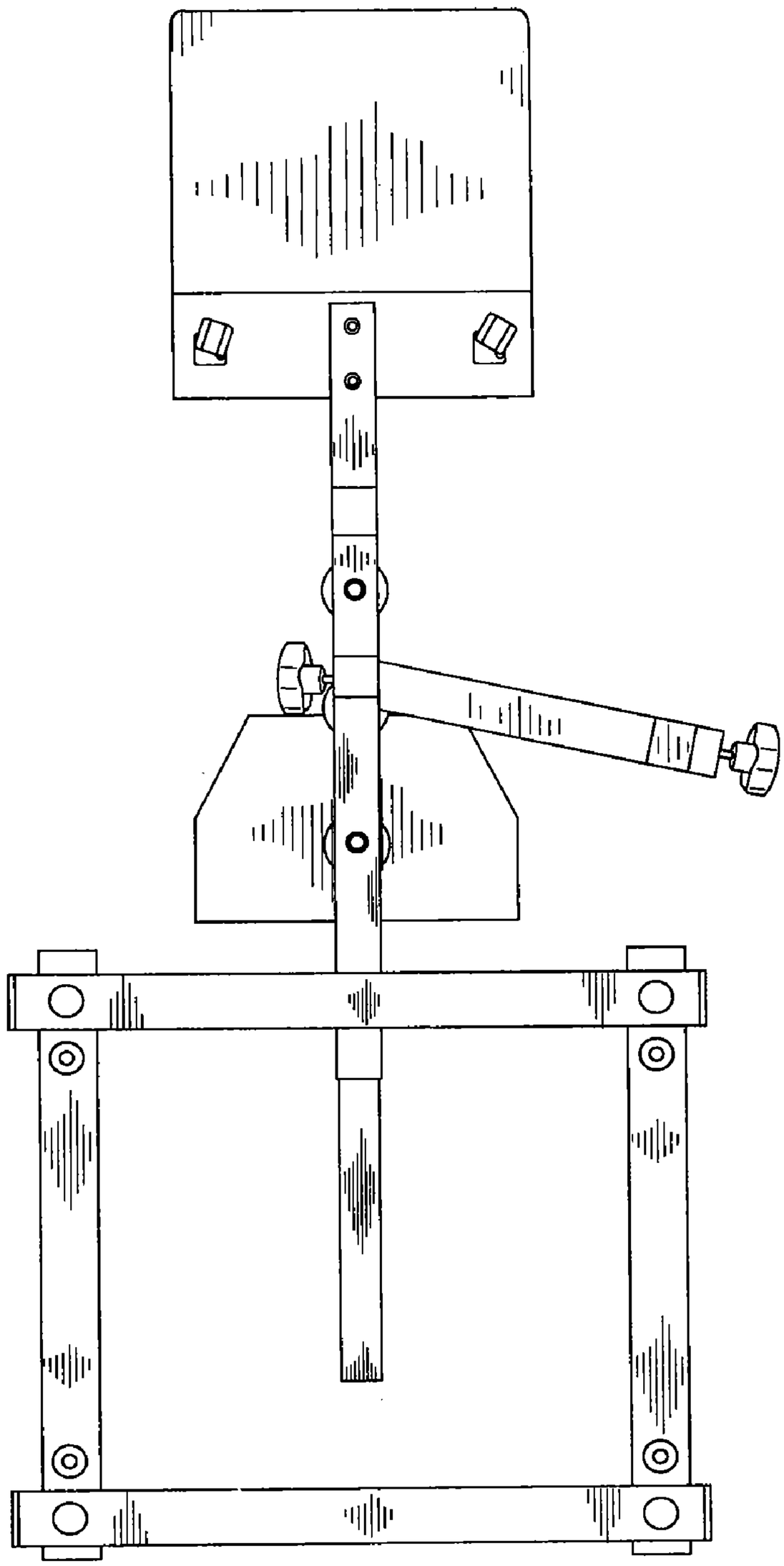

FIG. 14

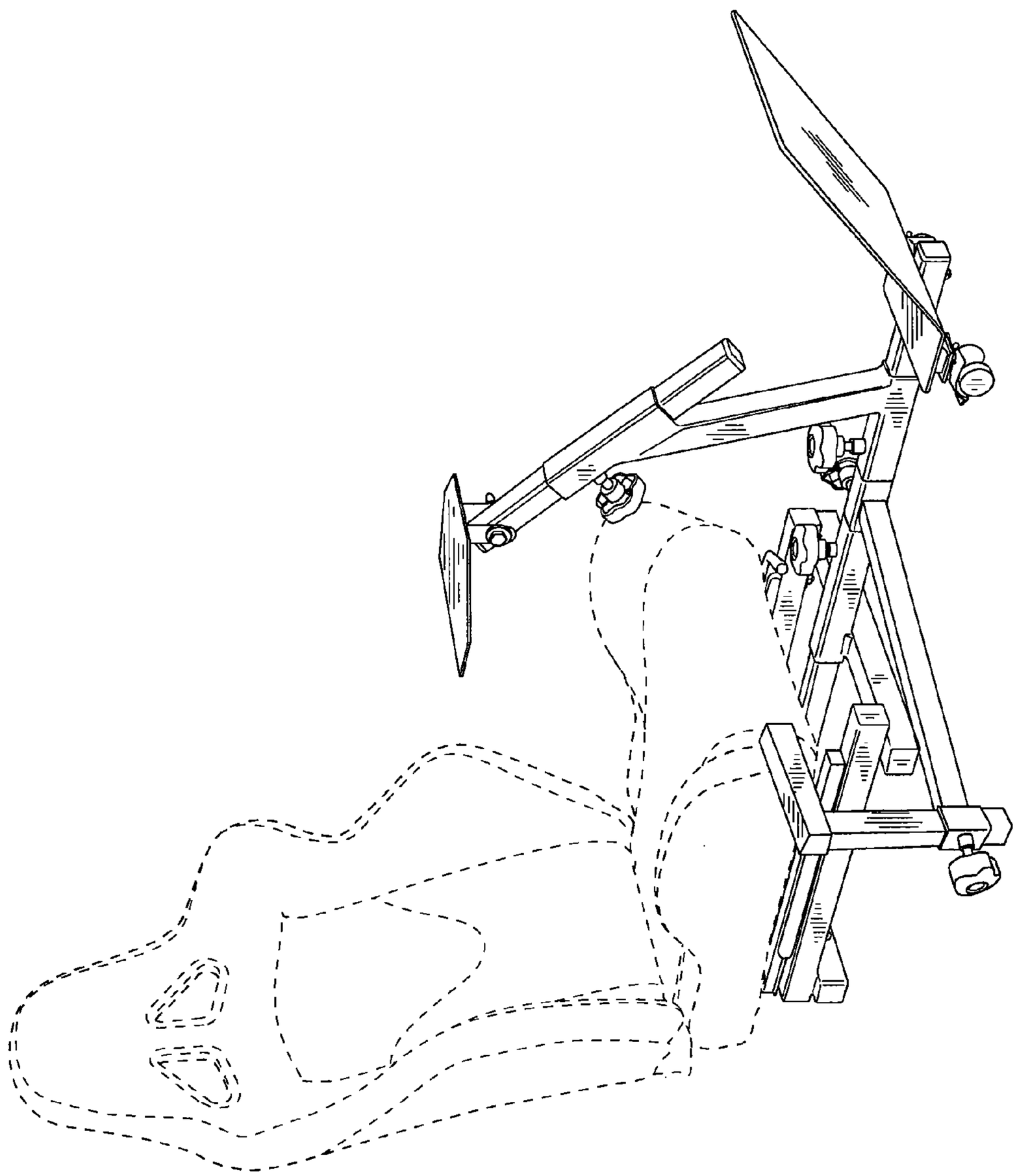

FIG. 15

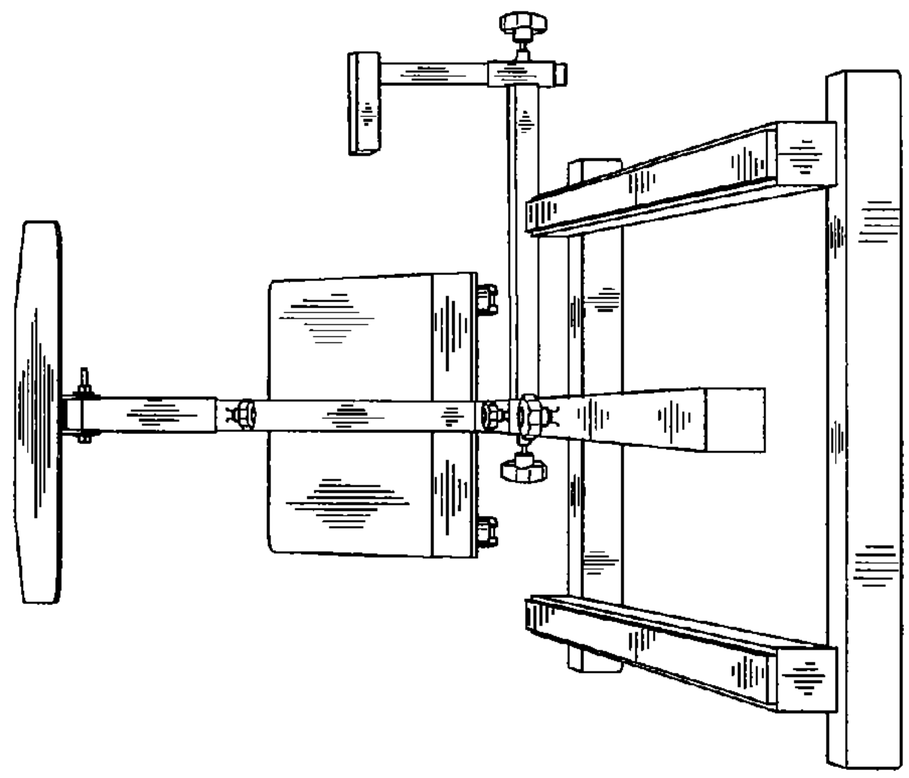

FIG. 17

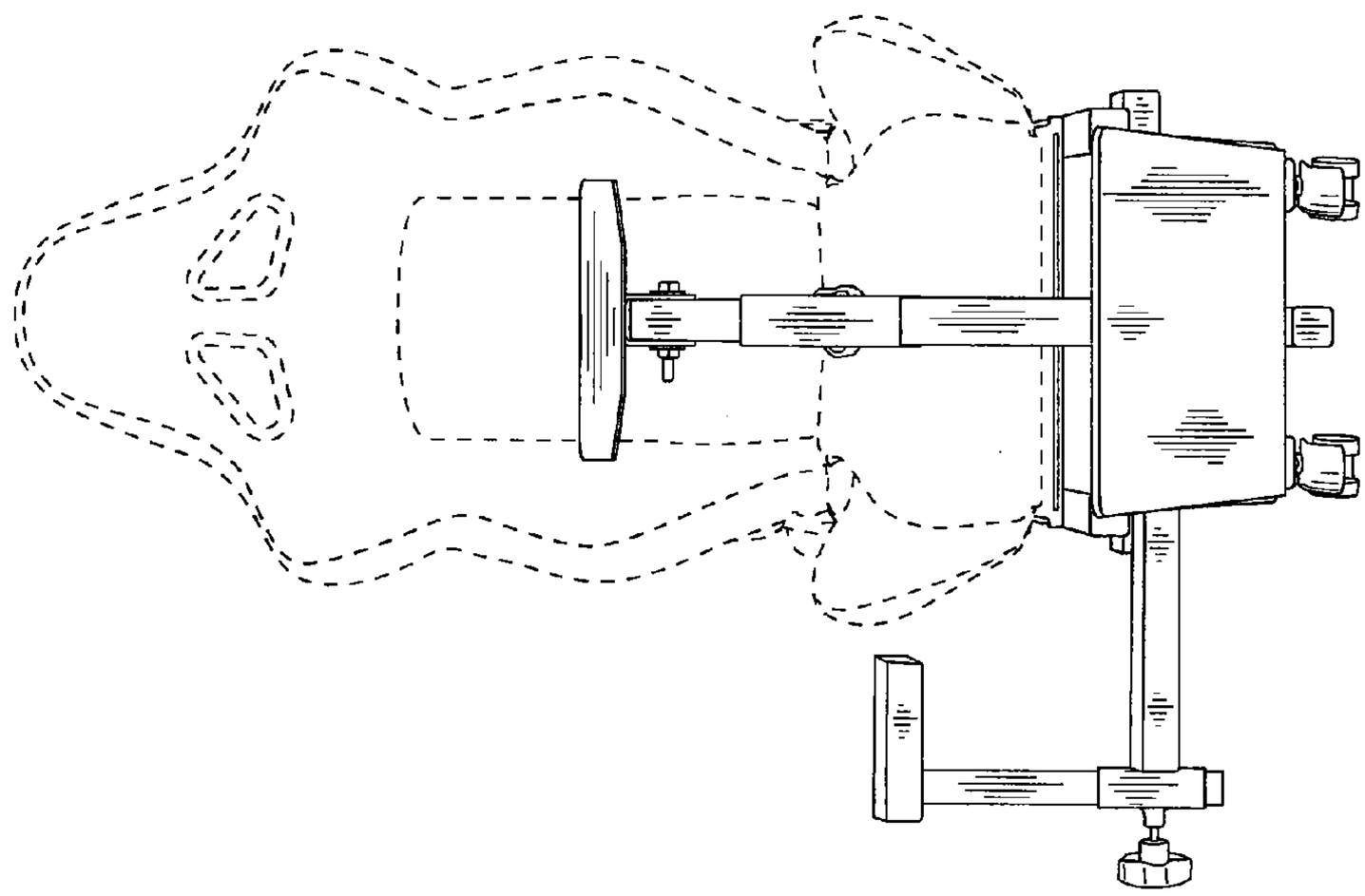

FIG. 16

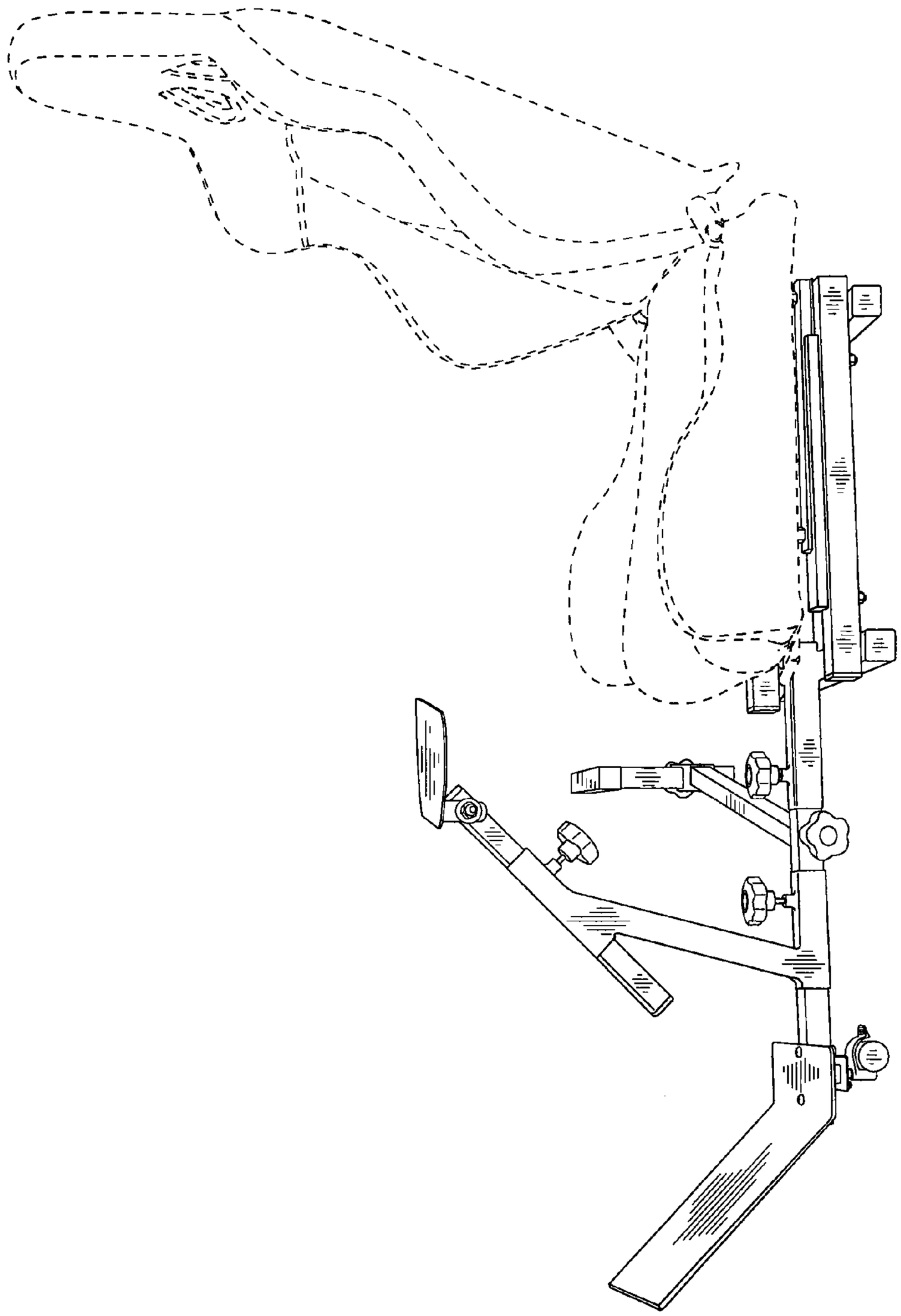

FIG. 18

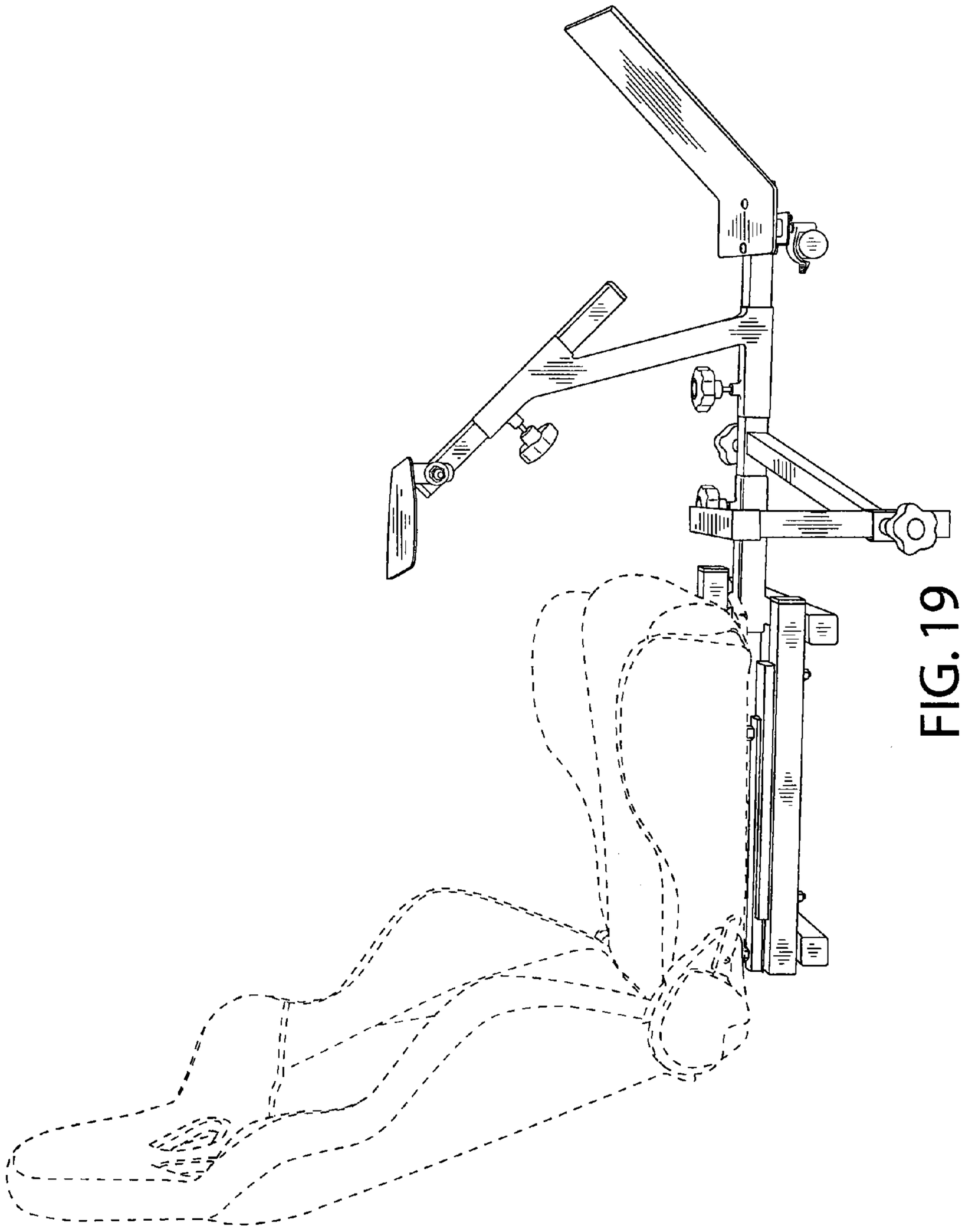

FIG. 19

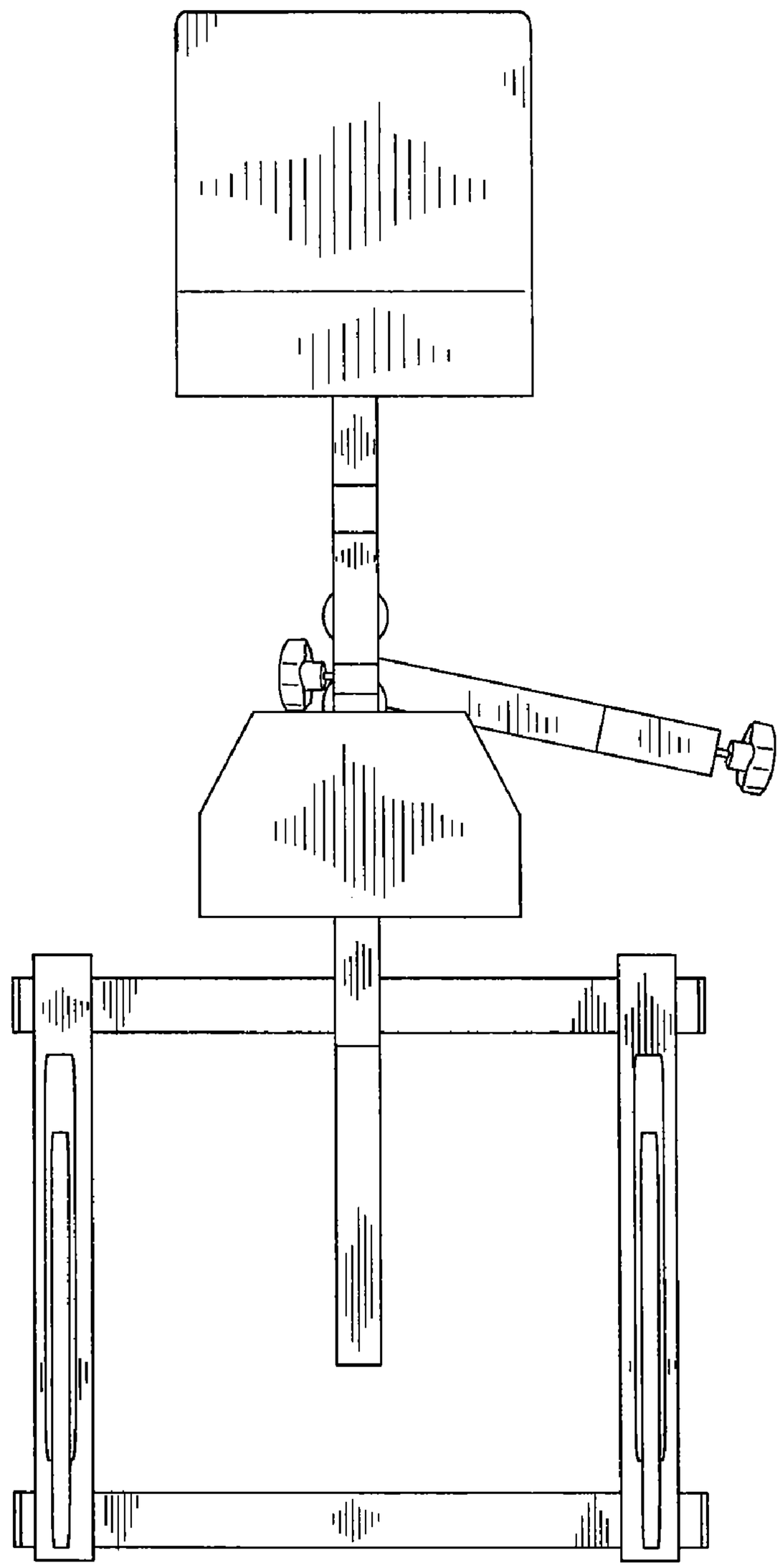

FIG. 20

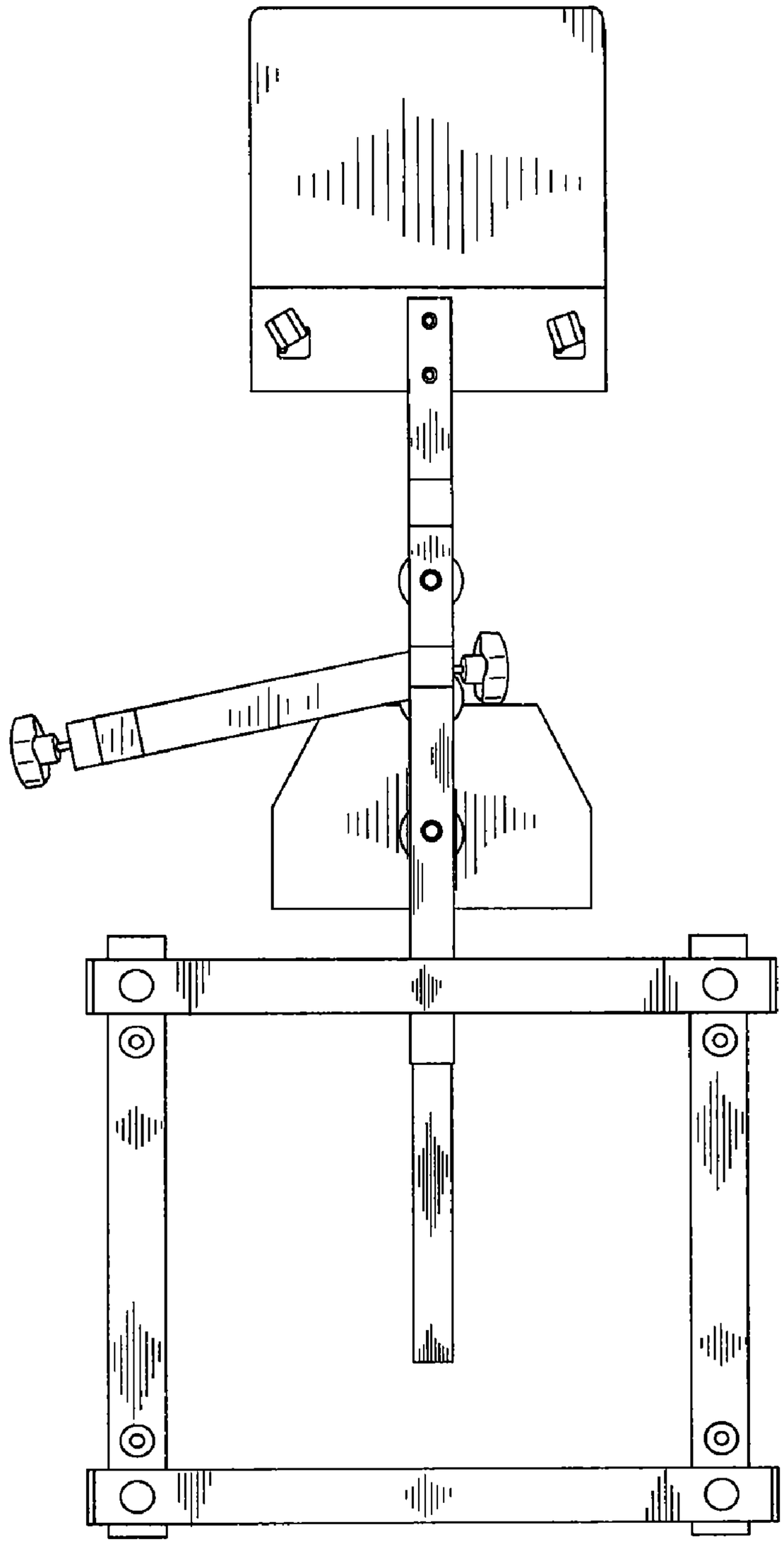

FIG. 21