US00D655814S

(12) United States Design Patent
Trifilio

(10) Patent No.: US D655,814 S
(45) Date of Patent: ** Mar. 13, 2012

(54) **FLUID MANAGEMENT CONNECTOR**

(75) Inventor: **Christian Trifilio**, St. Paul, MN (US)

(73) Assignee: **Circle Biologics, Inc.**, Minneapolis, MN (US)

(**) Term: **14 Years**

(21) Appl. No.: **29/316,085**

(22) Filed: **Aug. 21, 2009**

(51) **LOC (9) Cl.** **24-02**
(52) **U.S. Cl.** **D24/130**
(58) **Field of Classification Search** D24/110, D24/129; 604/905, 256, 246, 83, 167.01, 604/167.02, 167.03, 167.04, 533, 538, 539, 604/284, 523, 546
See application file for complete search history.

(56) **References Cited**

U.S. PATENT DOCUMENTS

D239,024 S * 3/1976 D'Alo D24/129
D239,025 S * 3/1976 D'Alo D24/129
3,976,073 A * 8/1976 Quick et al. 604/414
5,350,080 A * 9/1994 Brown et al. 220/62.21
5,507,535 A * 4/1996 McKamey et al. 285/149.1
D473,941 S * 4/2003 Cise et al. D24/129
6,764,467 B1 * 7/2004 Roby et al. 604/191
2002/0147429 A1 * 10/2002 Cowan et al. 604/187
2007/0265577 A1 * 11/2007 Uematsu et al. 604/200
2011/0230856 A1 * 9/2011 Kyle et al. 604/416

* cited by examiner

Primary Examiner — T. Chase Nelson
Assistant Examiner — Eric Goodman

(57) **CLAIM**

The ornamental design for a fluid management connector, as shown and described.

DESCRIPTION

FIG. **1** is a perspective view of a fluid management connector showing my new design;
FIG. **2** is a right side view of our new design, the left side view being a mirror image thereof;
FIG. **3** is a front view of our new design, the rear view being identical thereof;
FIG. **4** is a bottom view of our new design; and,
FIG. **5** is a top view of our new design.

1 Claim, 3 Drawing Sheets

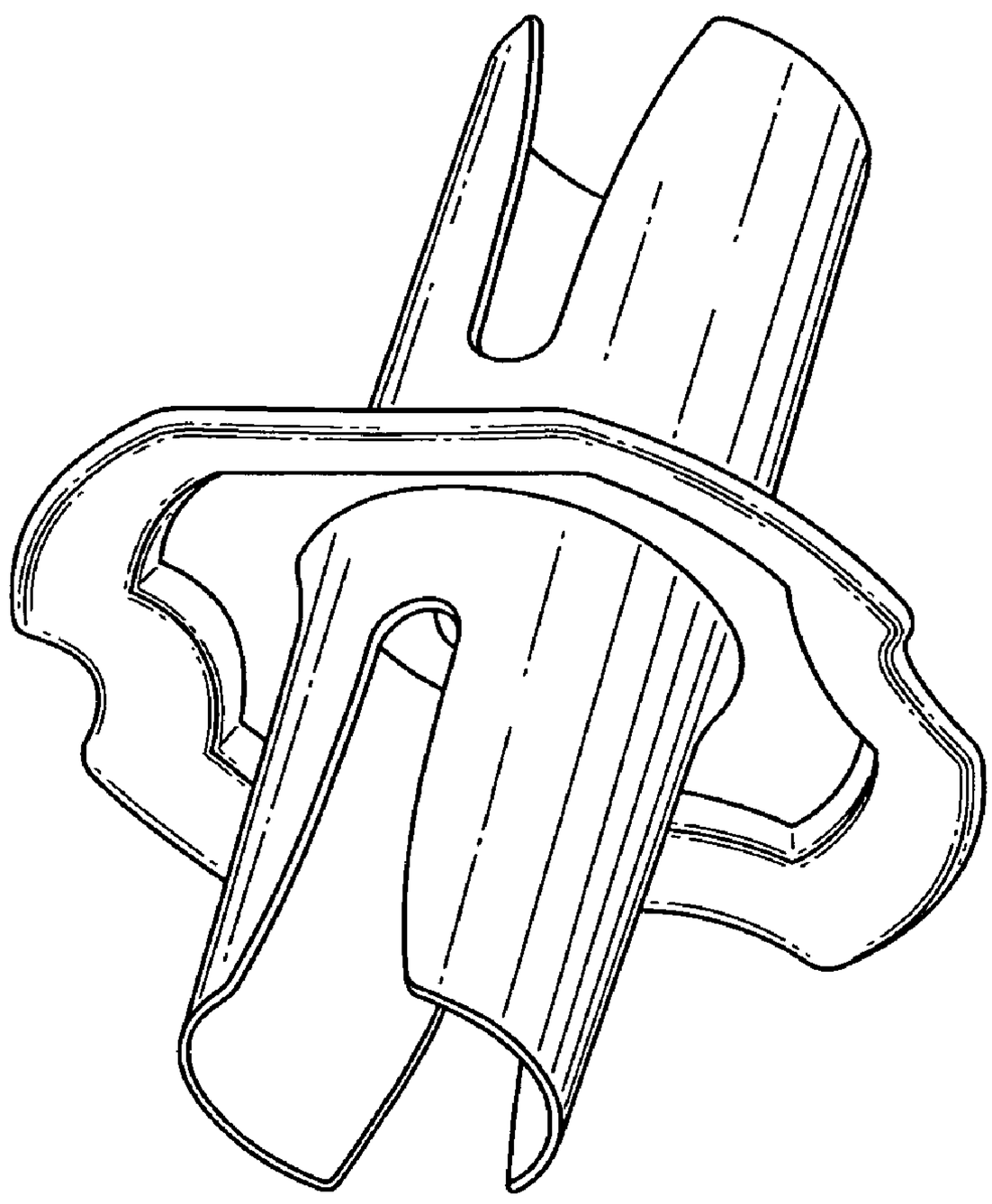

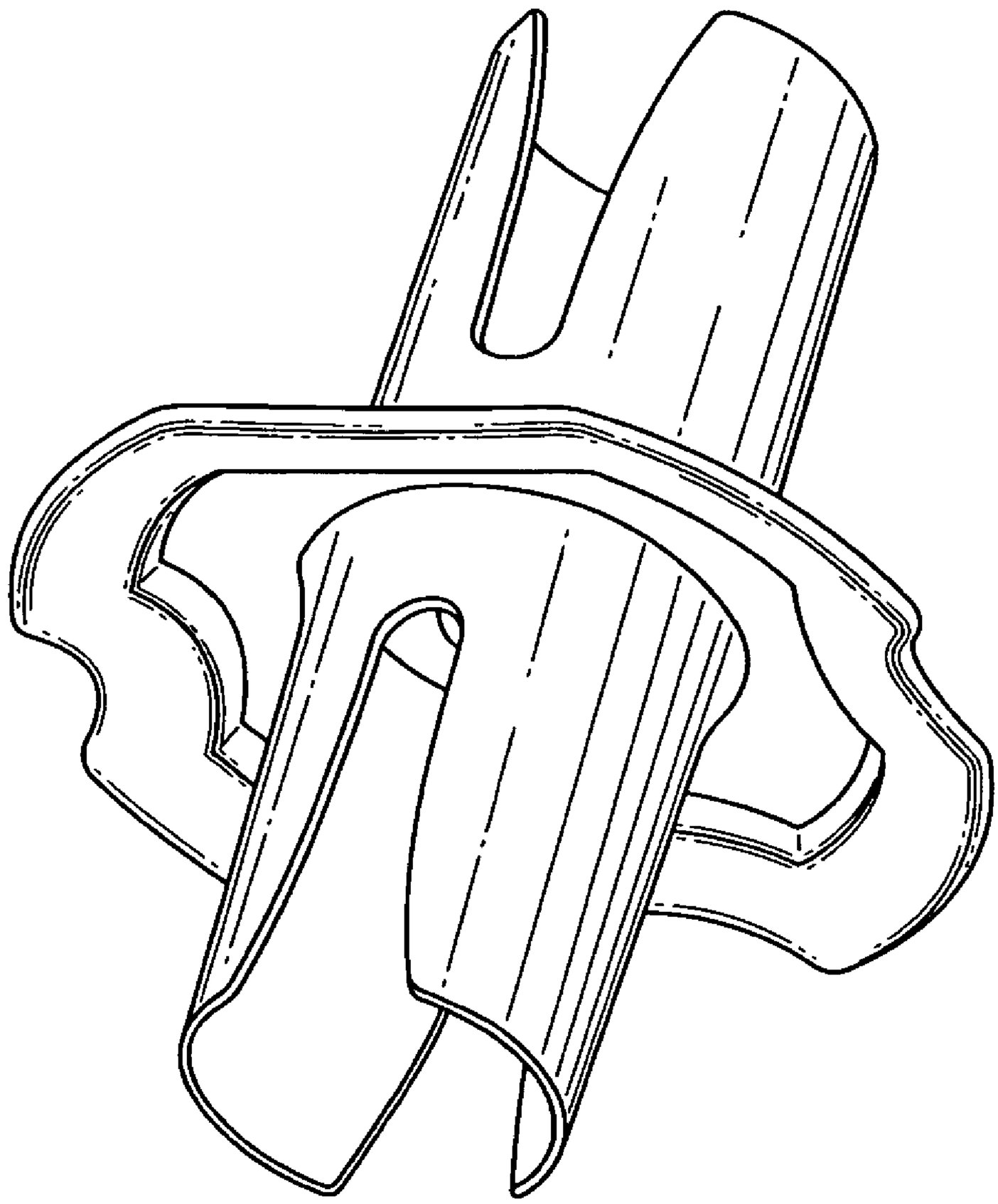

Fig. 1

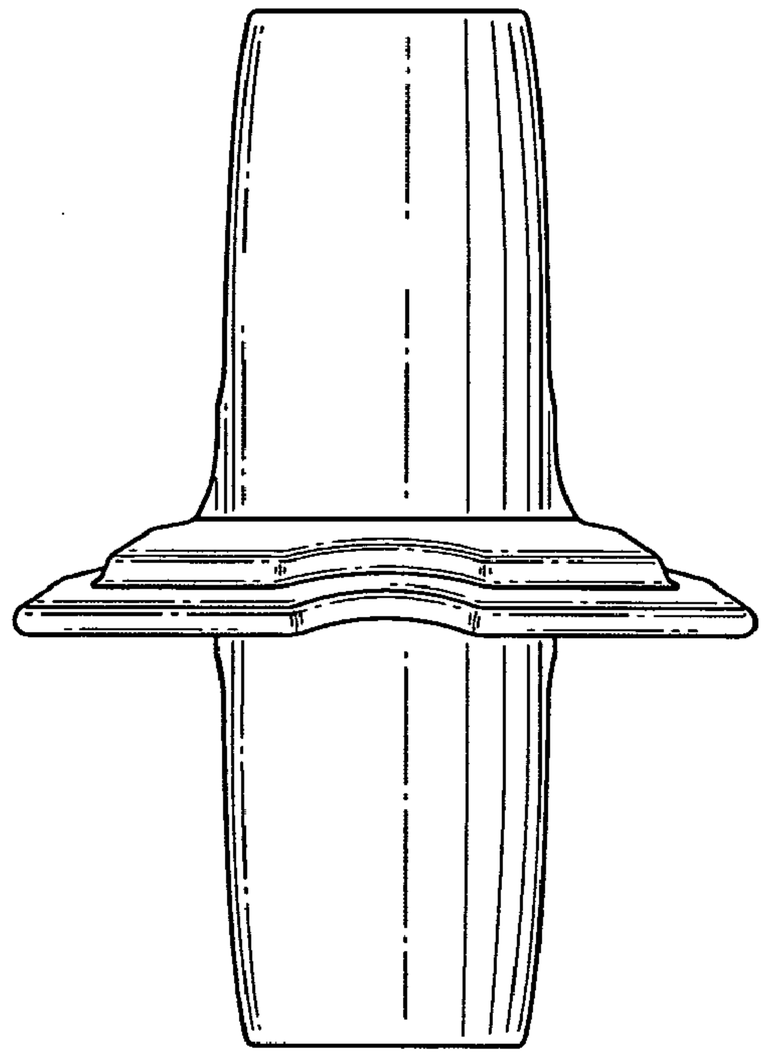

Fig. 2

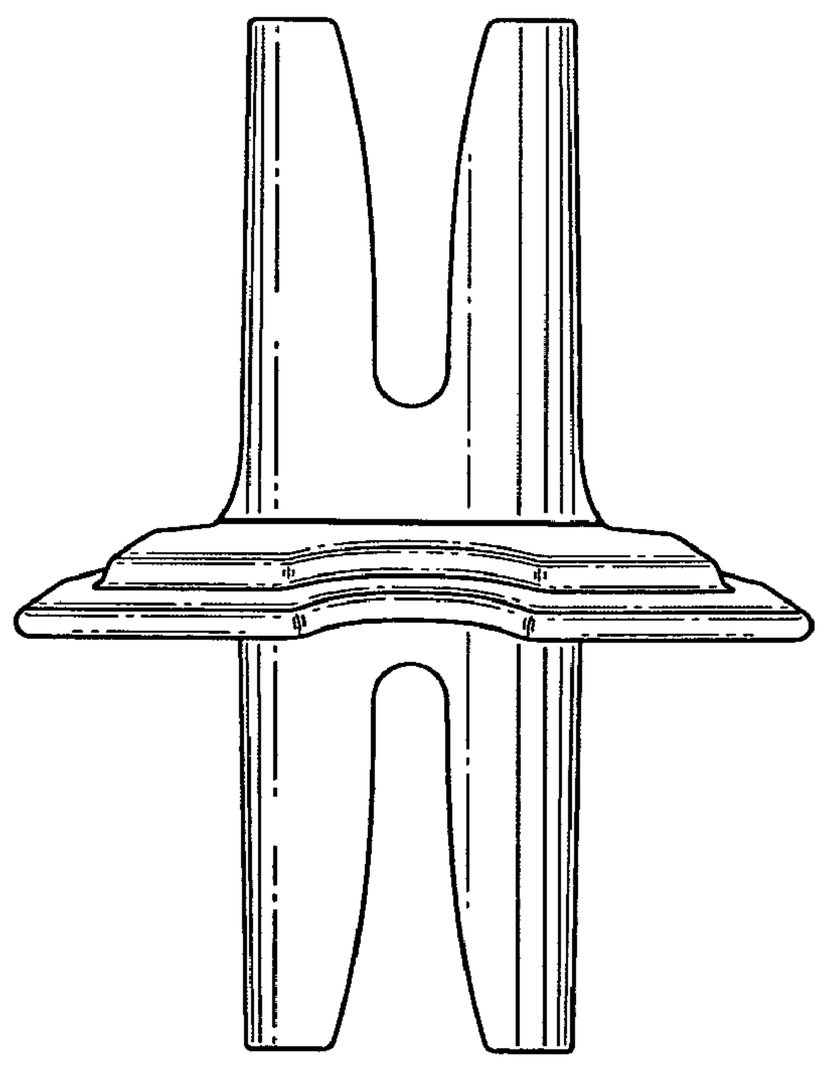

Fig. 3

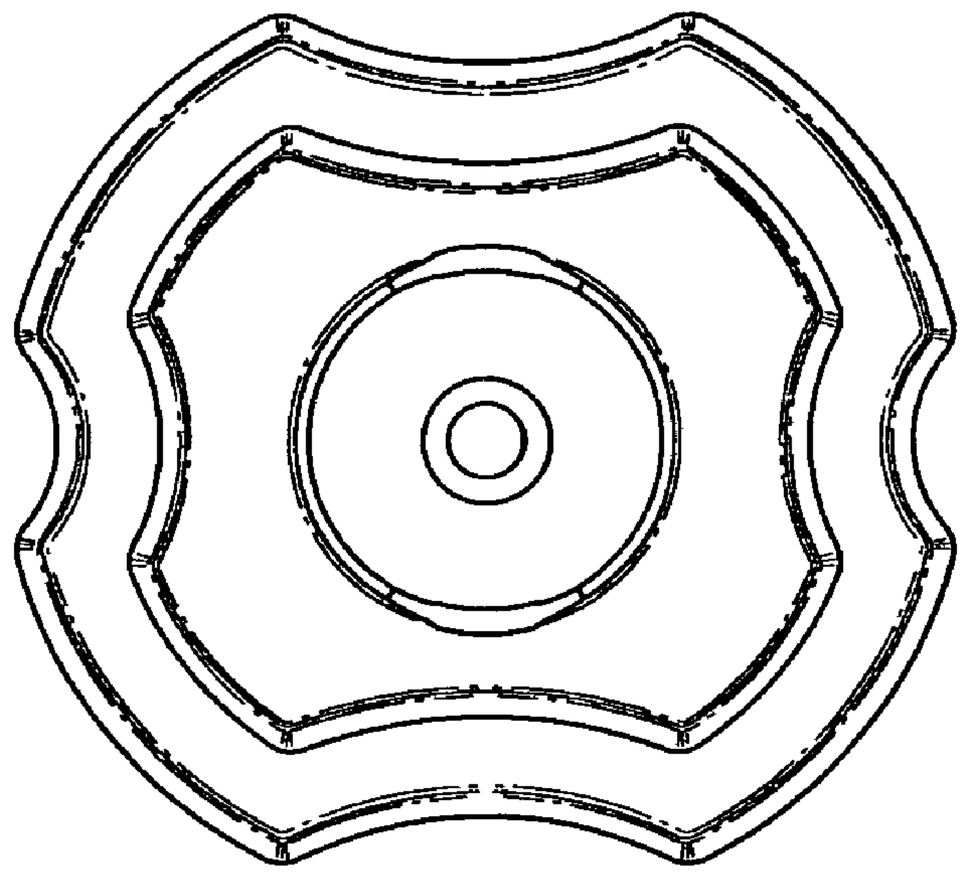

Fig. 4

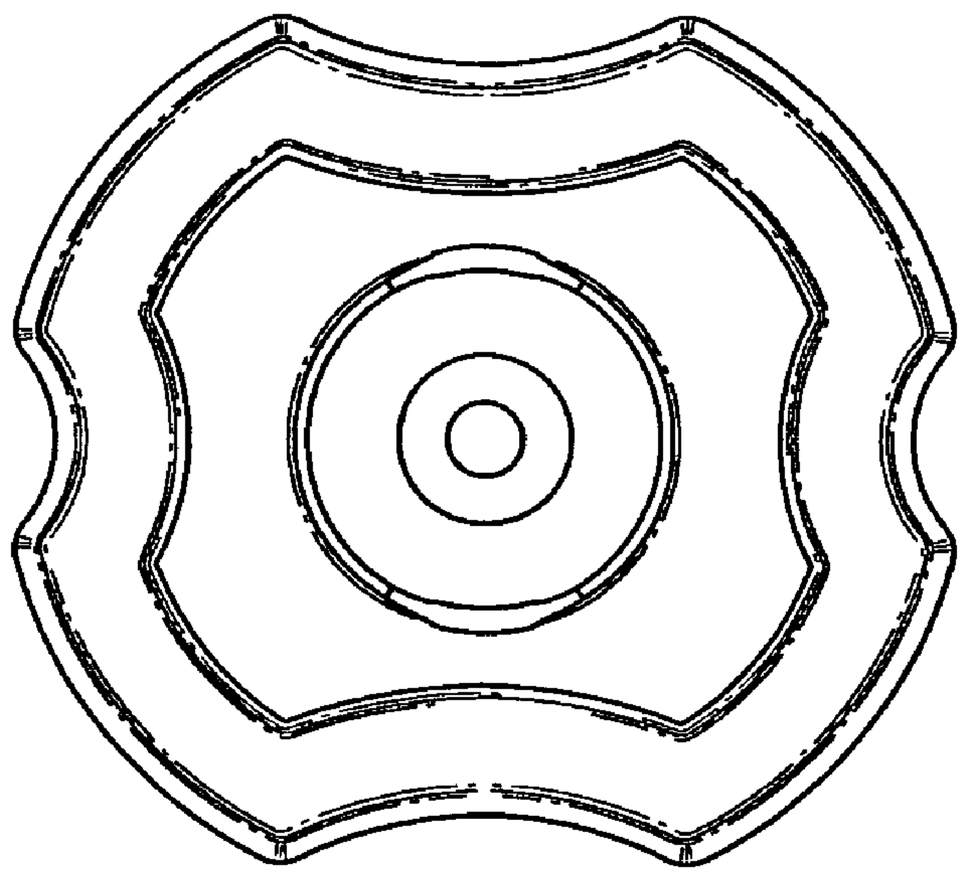

Fig. 5