US00D655481S

# (12) United States Design Patent

Séguin et al.

(10) Patent No.: US D655,481 S
(45) Date of Patent: ** Mar. 13, 2012

(54) **POCKET FOR A PAIR OF PANTS**

(75) Inventors: **Catherine Séguin**, Montreal (CA); **Angela D. Benoit**, McMurray, PA (US)

(73) Assignee: **Honeywell International Inc.**, Morristown, NJ (US)

(**) Term: **14 Years**

(21) Appl. No.: **29/370,041**

(22) Filed: **May 28, 2010**

(51) **LOC (9) Cl.** ..... **02-02**
(52) **U.S. Cl.** ..... **D2/857**
(58) **Field of Classification Search** ..... D2/731, D2/738, 742, 857; 2/227, 228, 238, 247, 2/250–253
See application file for complete search history.

(56) **References Cited**

U.S. PATENT DOCUMENTS

| | | | | | |
|---|---|---|---|---|---|
| 1,711,541 | A * | 5/1929 | Reiss | 2/253 |
| 2,029,207 | A * | 1/1936 | Wood | 2/254 |
| 2,129,196 | A * | 9/1938 | Boshnack et al. | 2/254 |
| 2,391,239 | A * | 12/1945 | Horwitz | 2/253 |
| 2,851,693 | A * | 9/1958 | Gottlieb | 2/279 |
| 2,986,743 | A * | 6/1961 | Eilen | 40/586 |
| 4,126,168 | A * | 11/1978 | Ganz et al. | 150/136 |
| 5,826,273 | A * | 10/1998 | Eckes | 2/69 |
| D639,027 | S * | 6/2011 | Seguin et al. | D2/857 |
| 2005/0251896 | A1* | 11/2005 | Donlan et al. | 2/269 |
| 2011/0214214 | A1* | 9/2011 | Seguin et al. | 2/23 |

* cited by examiner

*Primary Examiner* — Rashida Johnson
(74) *Attorney, Agent, or Firm* — Wood, Phillips, Katz, Clark & Mortimer

(57) **CLAIM**

We claim the ornamental design for a pocket for a pair of pants, as shown and described.

**DESCRIPTION**

FIG. **1** is a right side elevational view of a pocket for a pair of pants according to a first embodiment of the present design;
FIG. **2** is a front elevational view of the pocket for a pair of pants of FIG. **1**;
FIG. **3** is a rear elevational view of the pocket for a pair of pants of FIG. **1**;
FIG. **4** is left side elevational view of the pocket for a pair of pants of FIG. **1**;
FIG. **5** is a right side elevational view of the pocket for a pair of pants of FIG. **1**, with the pocket shown in the open position;
FIG. **6** is a front elevational view of the pocket for a pair of pants of FIG. **5**;
FIG. **7** is a rear elevational view of the pocket for a pair of pants of FIG. **5**;
FIG. **8** is a right side elevational view of a pocket for a pair of pants according to a second embodiment of the present design;
FIG. **9** is a front elevational view of the pocket for a pair of pants of FIG. **8**;
FIG. **10** is a rear elevational view of the pocket for a pair of pants of FIG. **8**;
FIG. **11** is a left side elevational view of the pocket for a pair of pants of FIG. **8**;
FIG. **12** is a front elevational view of the pocket for a pair of pants of FIG. **8**, with the pocket shown in the open position;
FIG. **13** is a rear elevational view of the pocket for a pair of pants of FIG. **12**; and,
FIG. **14** is a left side elevational view of the pocket for a pair of pants of FIG. **12**.
The broken lines shown in the figures illustrate environmental portions that form no part of the claimed design.

**1 Claim, 14 Drawing Sheets**

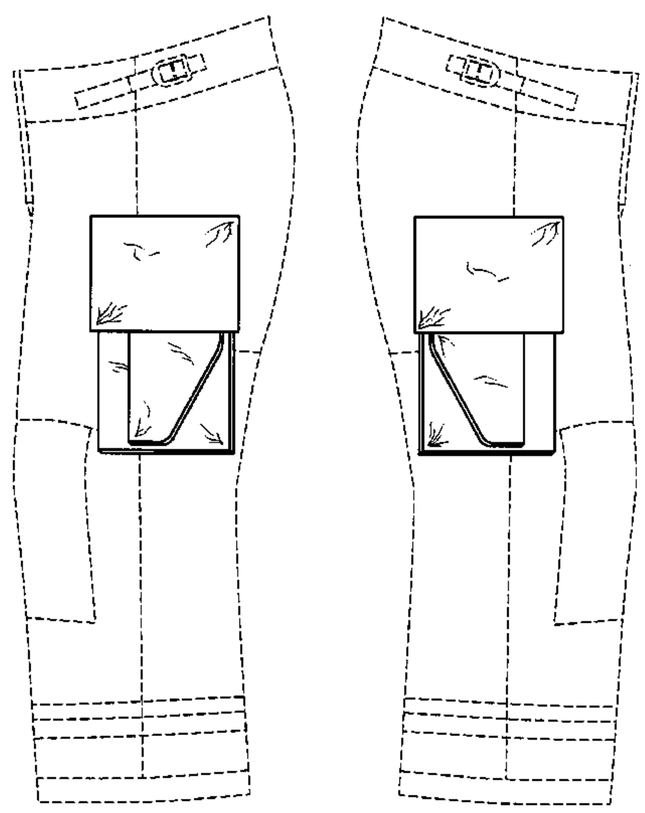

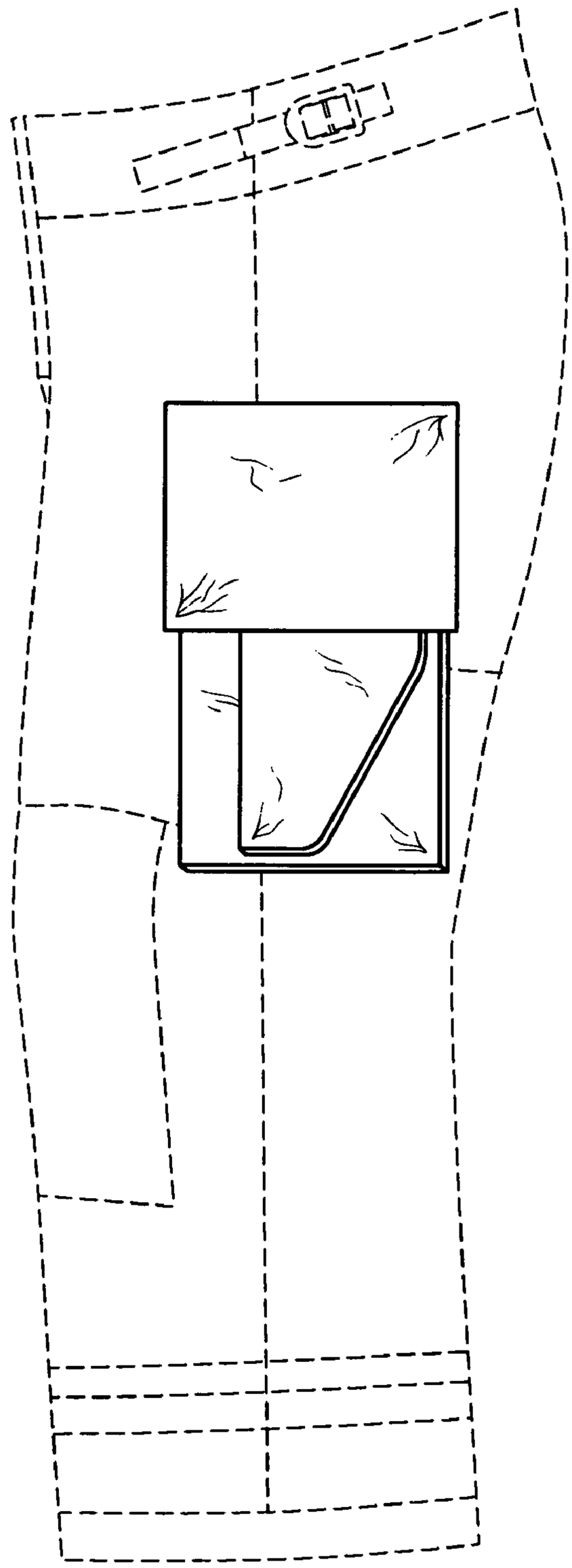

FIG. 1

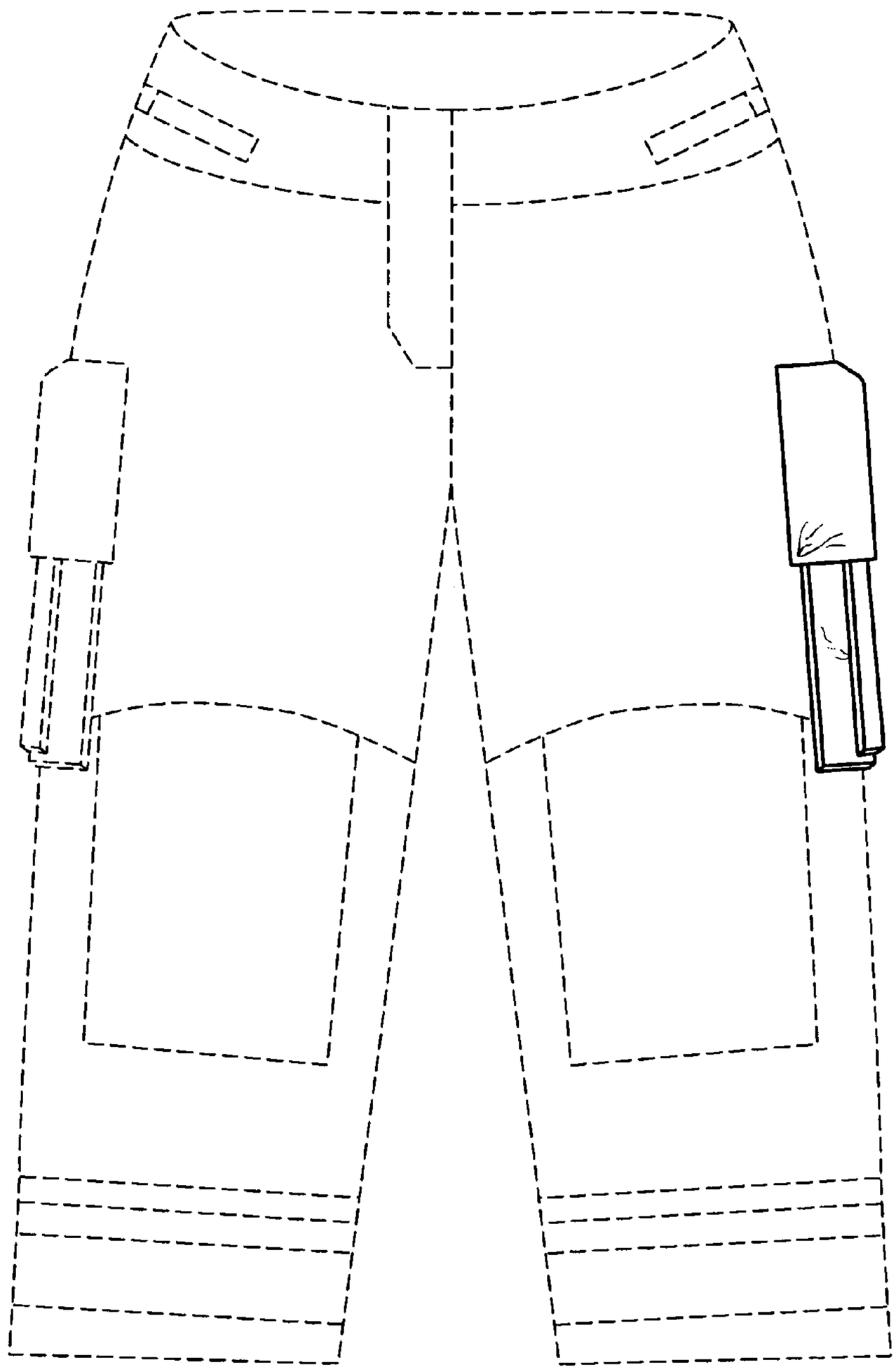

FIG. 2

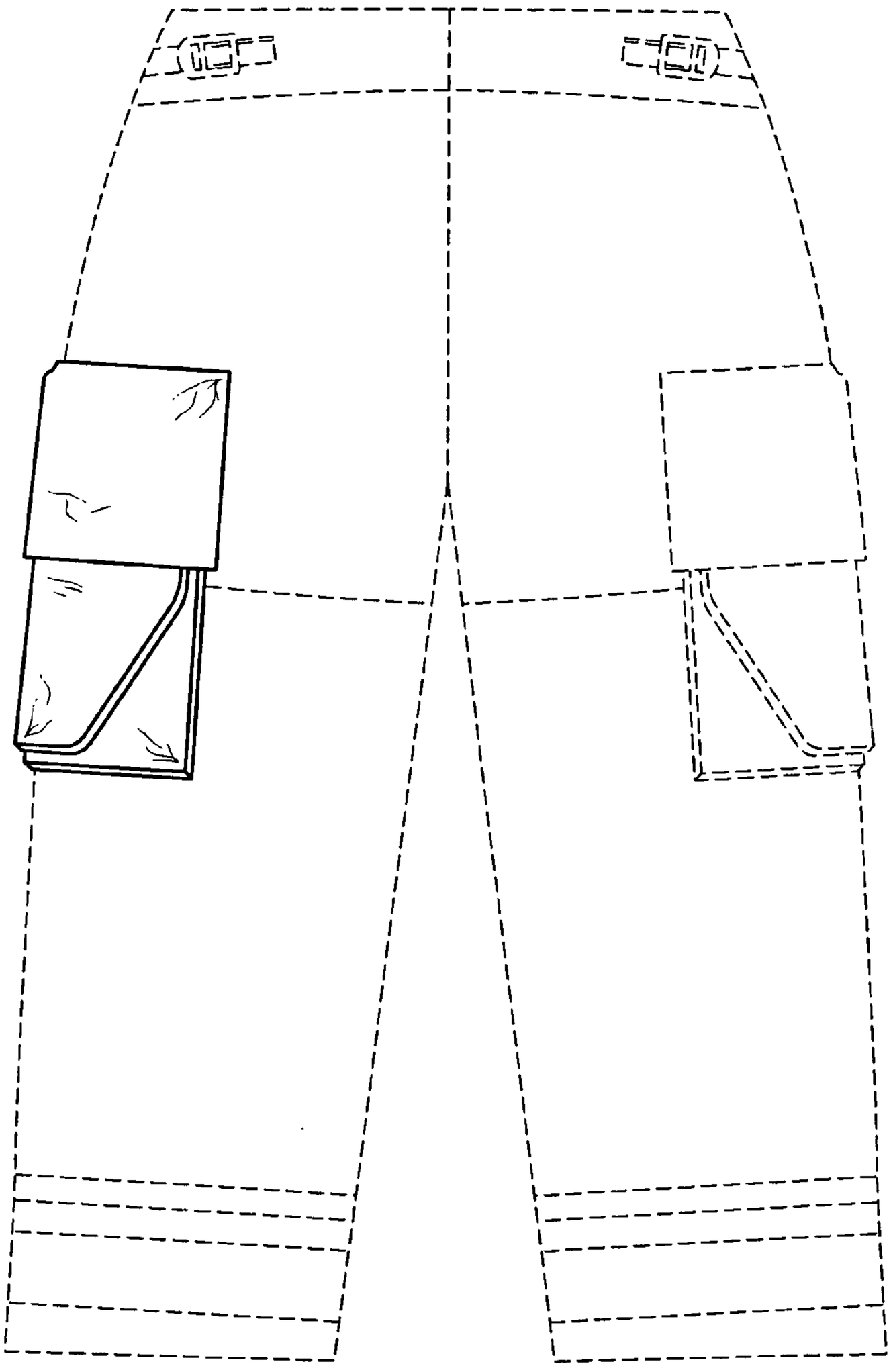

FIG. 3

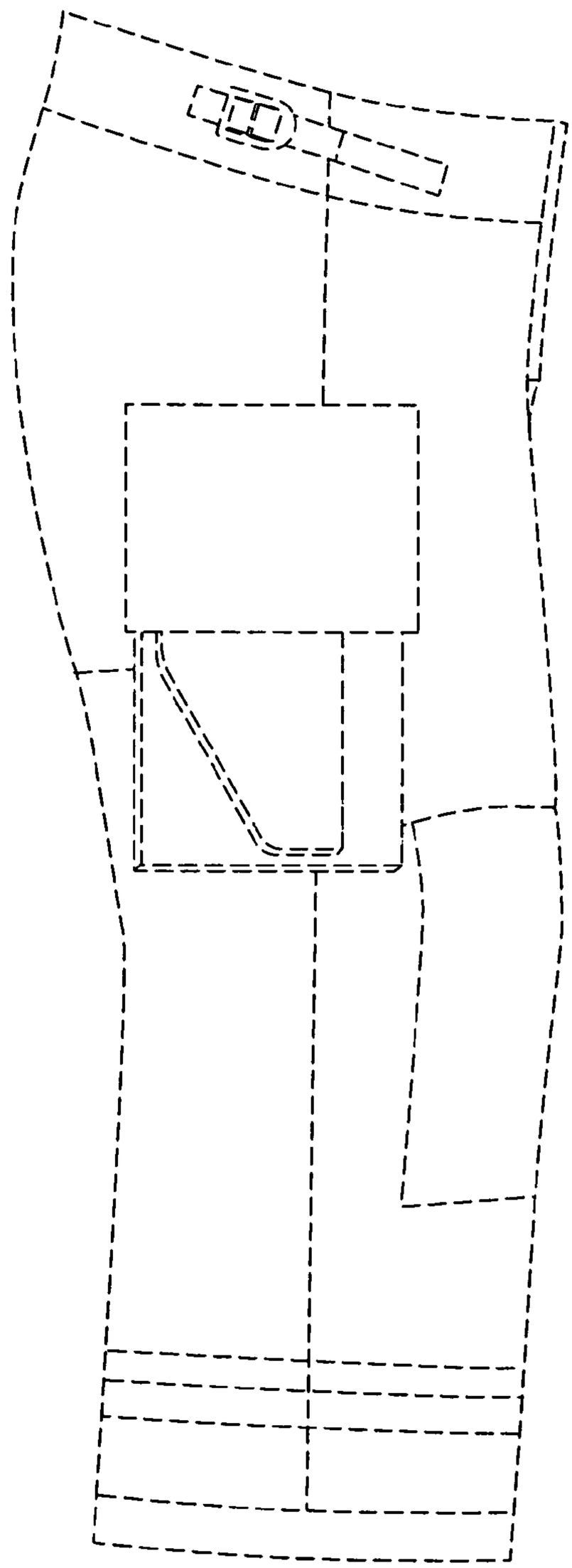

FIG. 4

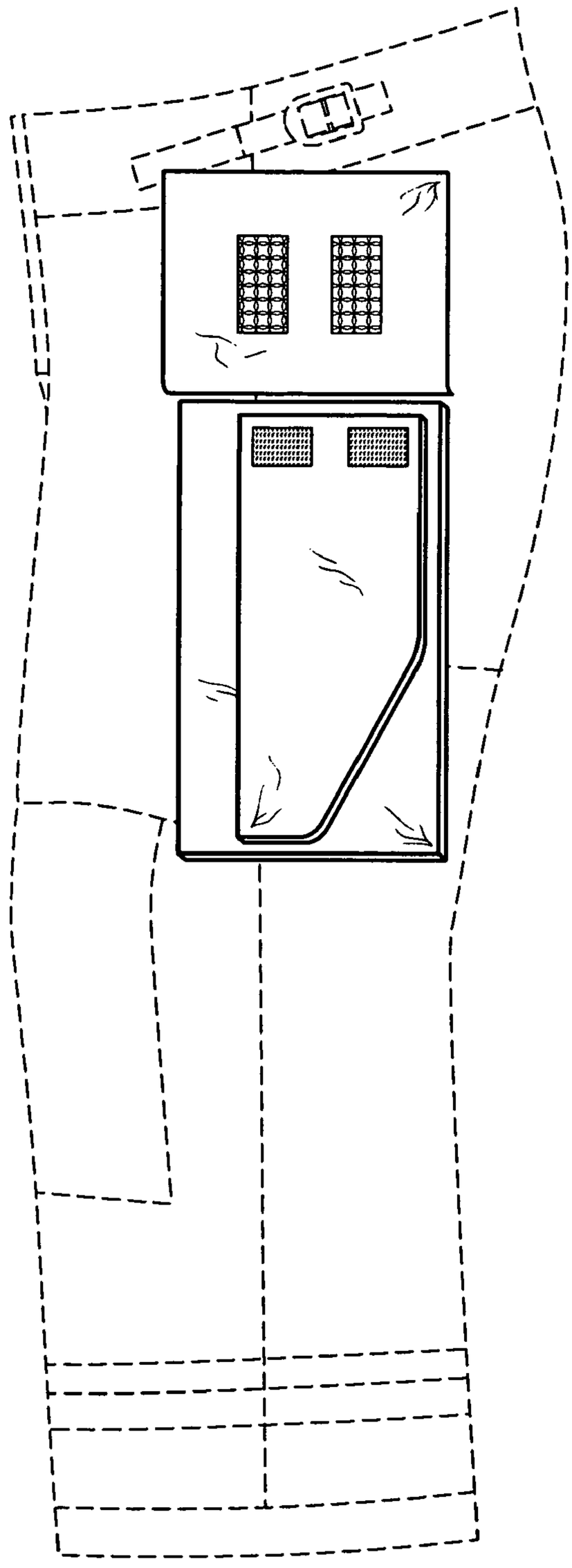

FIG. 5

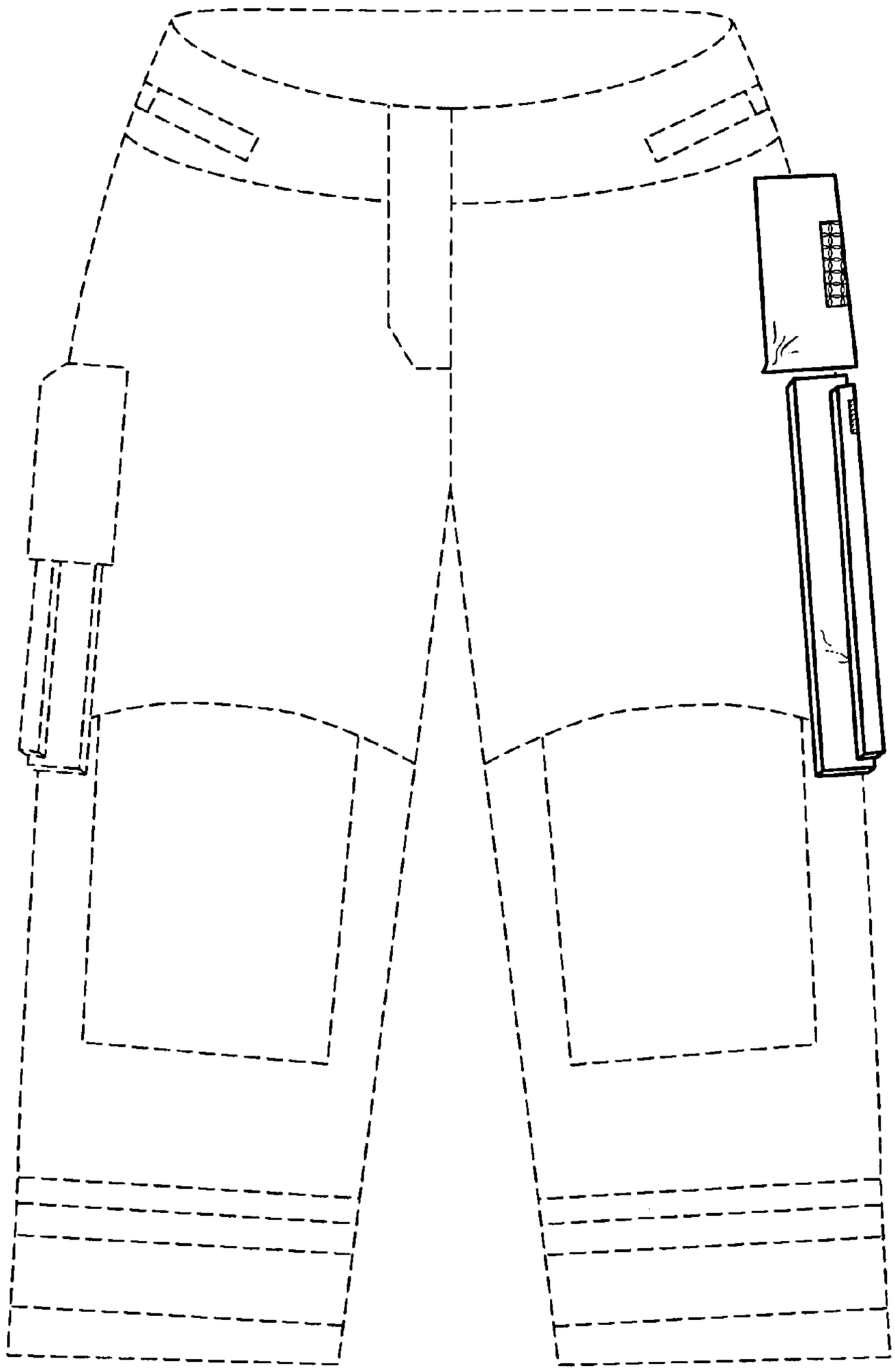

FIG. 6

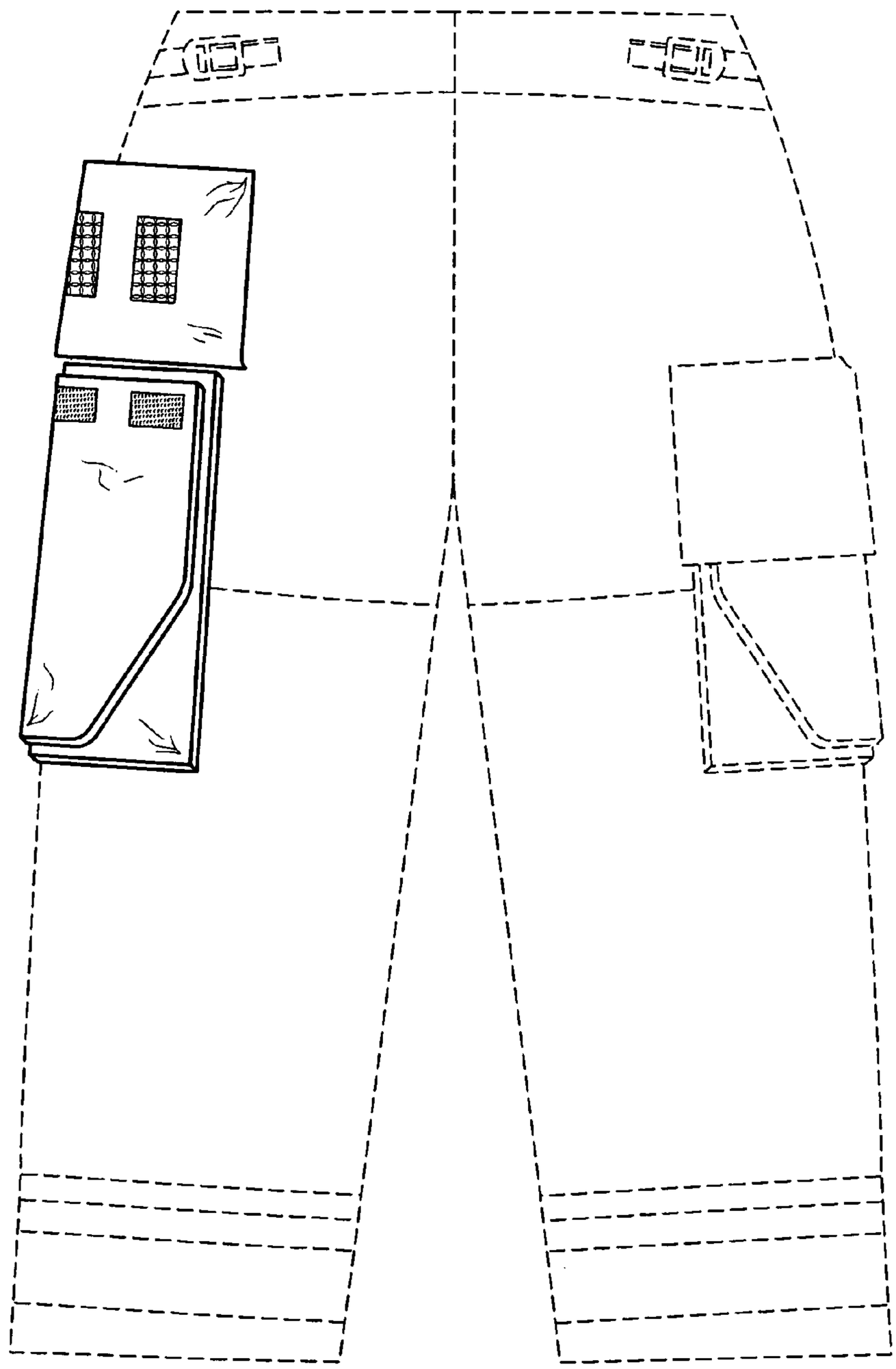

FIG. 7

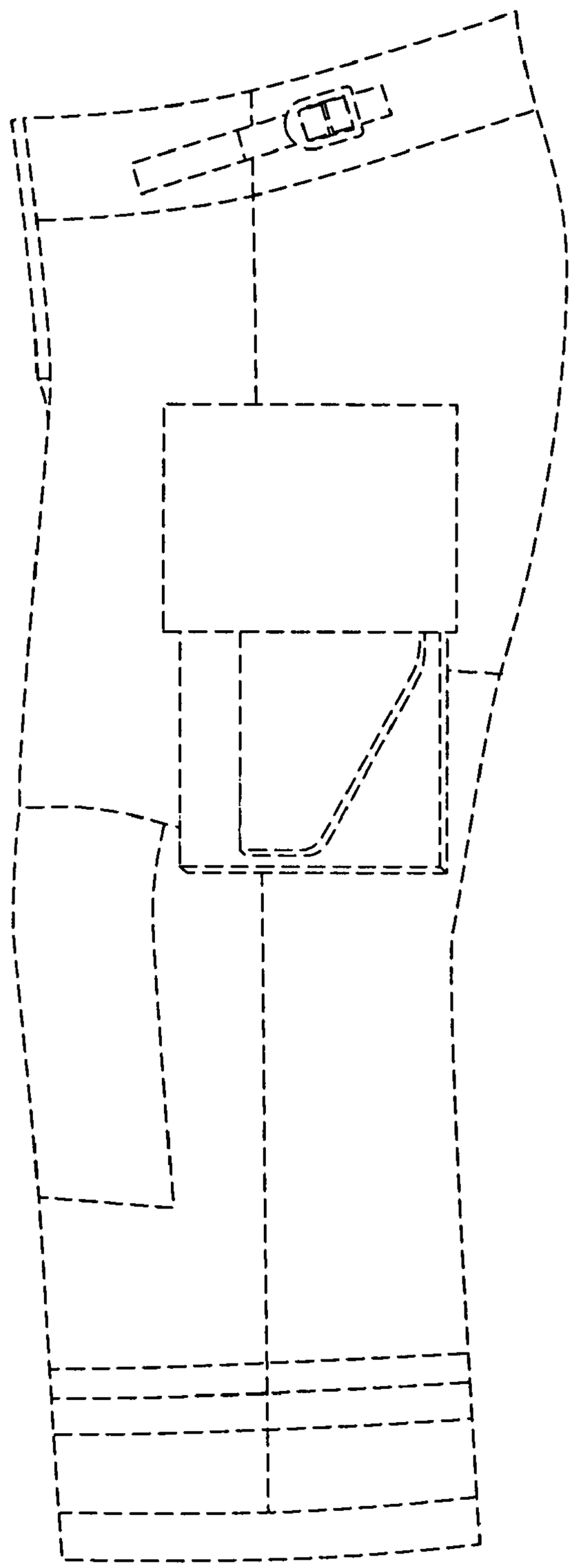

FIG. 8

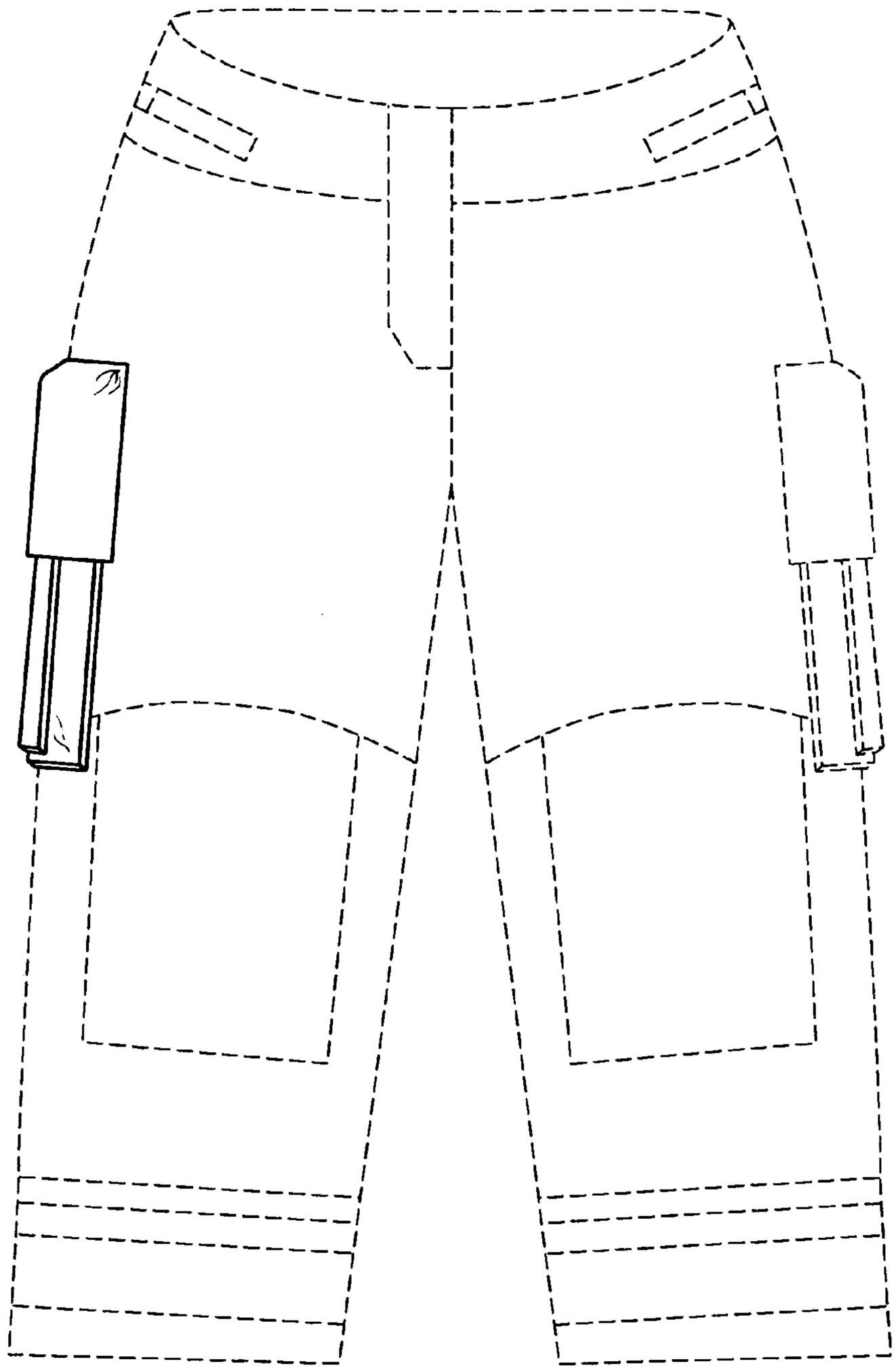

FIG. 9

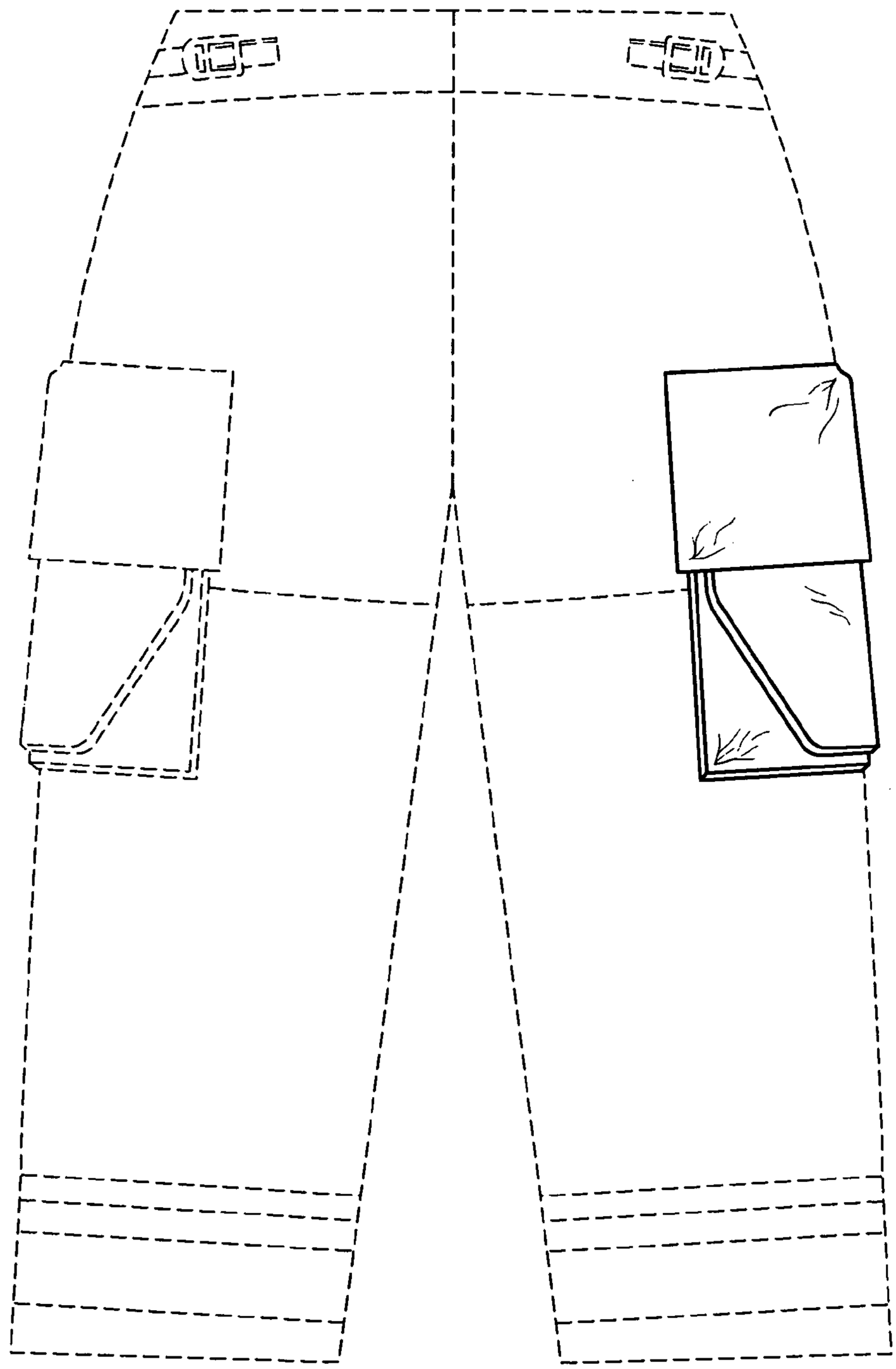

FIG. 10

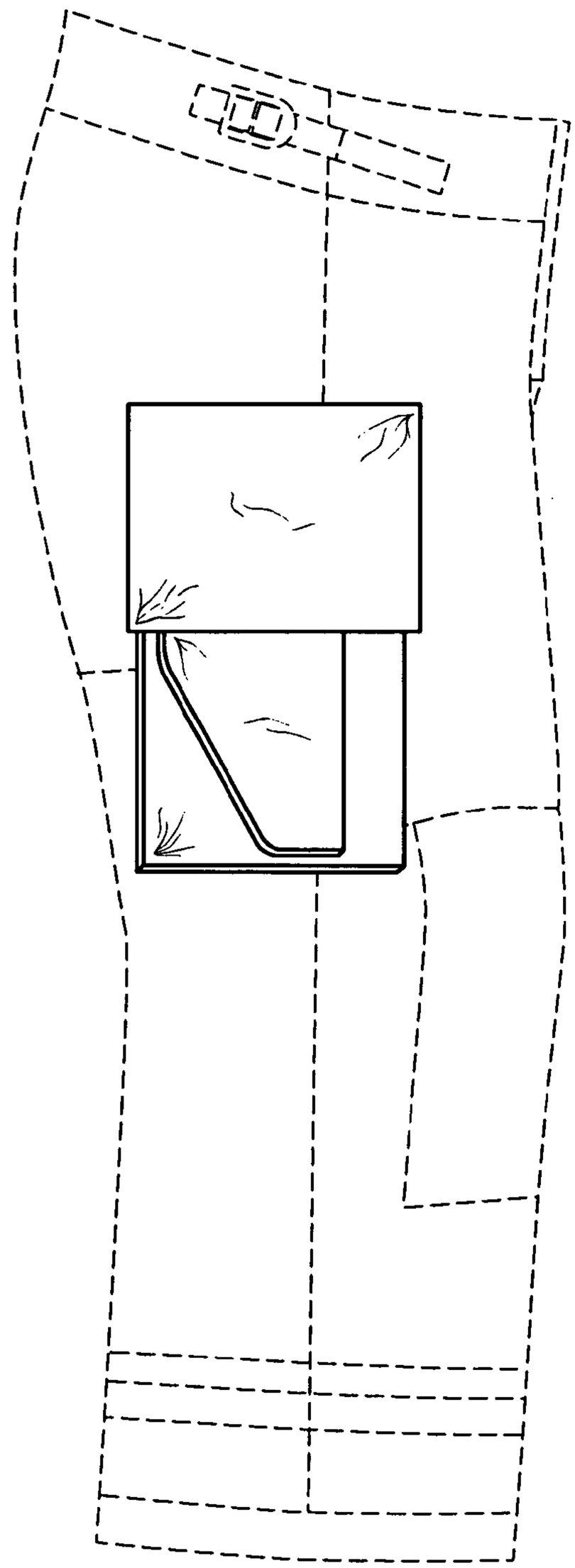

FIG. 11

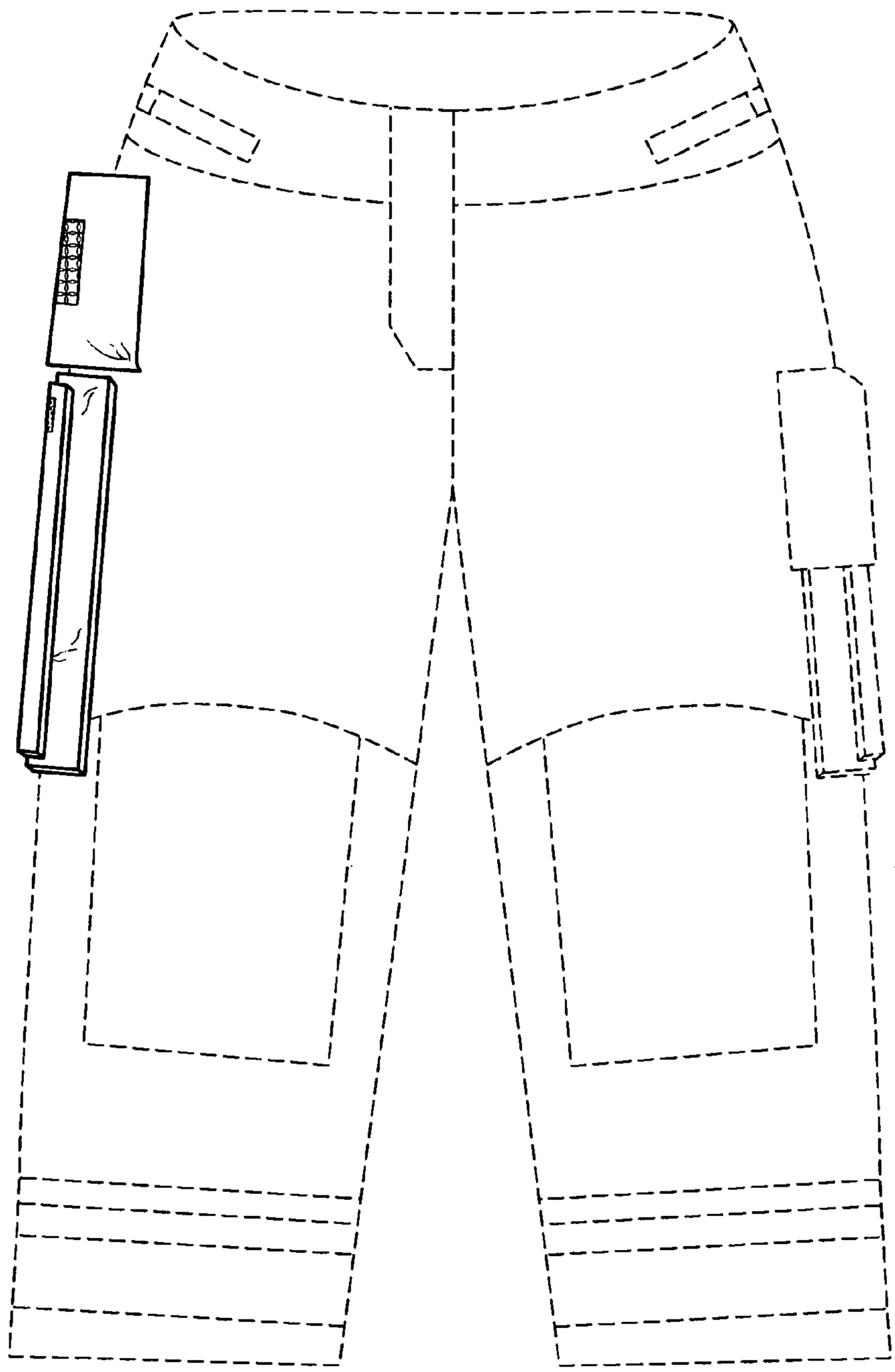

FIG. 12

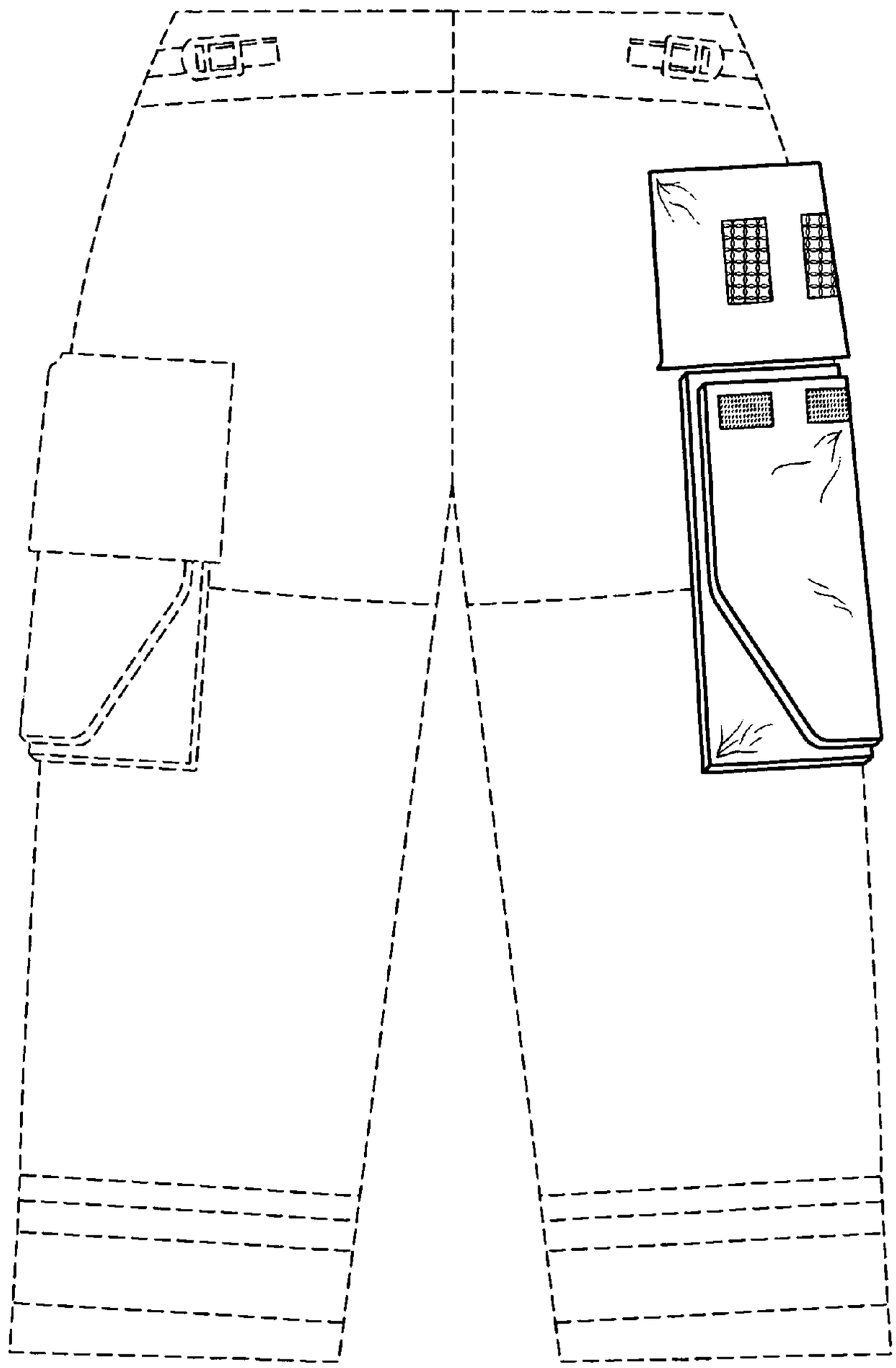

FIG. 13

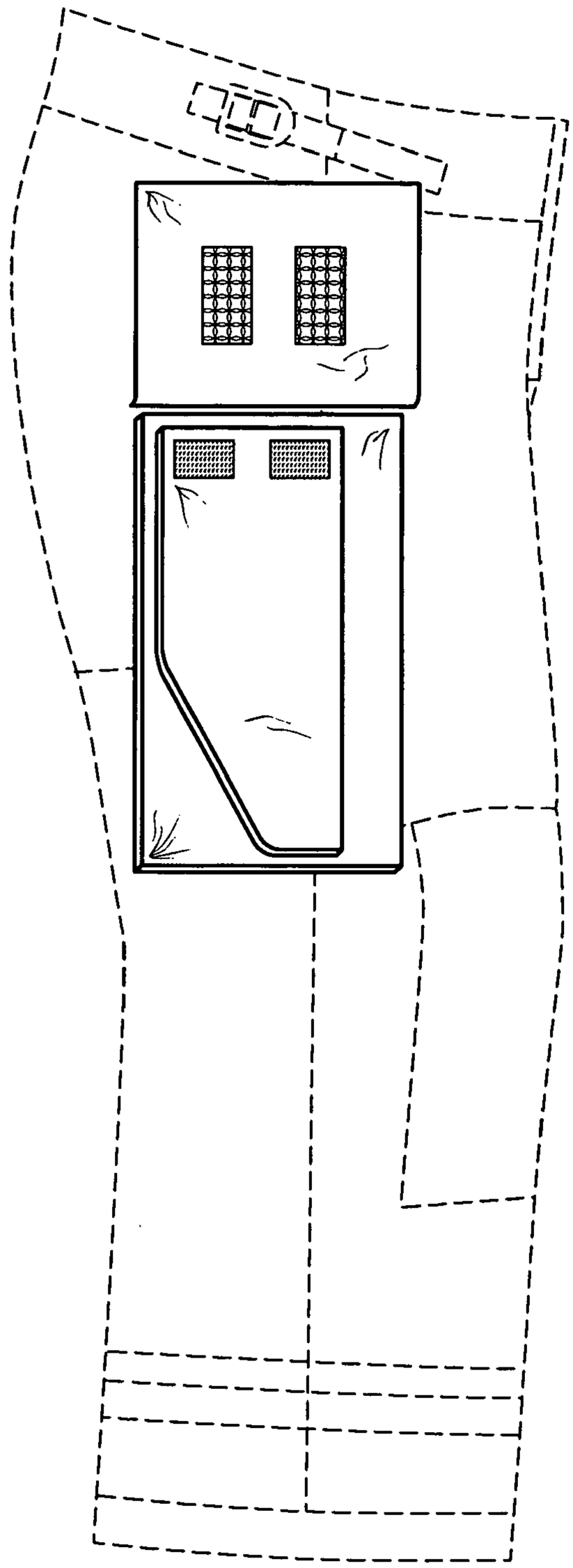

FIG. 14