US00D655230S

(12) United States Design Patent
Nishihama

(10) Patent No.: US D655,230 S
(45) Date of Patent: ** Mar. 6, 2012

(54) **AUTOMOBILE**

(75) Inventor: **Toyokazu Nishihama**, Toyota (JP)

(73) Assignee: **Toyota Jidosha Kabushiki Kaisha** (JP)

(**) Term: **14 Years**

(21) Appl. No.: **29/388,441**

(22) Filed: **Mar. 29, 2011**

(30) **Foreign Application Priority Data**

Oct. 6, 2010 (JP) 2010-023937

(51) **LOC (9) Cl.** **12-16**
(52) **U.S. Cl.** **D12/196**
(58) **Field of Classification Search** D12/184, D12/196, 90–92, 86; 280/152.1, 847–849, 280/851; 296/181.1, 181.5
See application file for complete search history.

(56) **References Cited**

U.S. PATENT DOCUMENTS

D508,004 S * 8/2005 Metros et al. D12/196
D531,547 S * 11/2006 Hiruta et al. D12/92
D547,699 S * 7/2007 Okazaki et al. D12/92
D562,188 S * 2/2008 Matsumoto et al. D12/92
D573,522 S * 7/2008 Sato et al. D12/196
D580,331 S * 11/2008 Gueler et al. D12/196
D580,332 S * 11/2008 Gueler et al. D12/196
D592,117 S * 5/2009 Ward D12/196
D592,555 S * 5/2009 Kanno et al. D12/92
D598,355 S * 8/2009 Sato et al. D12/196
D598,813 S * 8/2009 Hiranaka et al. D12/92
D598,822 S * 8/2009 Hiranaka et al. D12/164
D598,823 S * 8/2009 Hiranaka et al. D12/164
D601,072 S * 9/2009 Giachin D12/196
D602,399 S * 10/2009 Sakae et al. D12/91
D602,821 S * 10/2009 Tada et al. D12/164
D605,101 S * 12/2009 Mueller D12/196
D605,572 S * 12/2009 Ward D12/196
D620,841 S * 8/2010 Sakae et al. D12/92
D622,186 S * 8/2010 Miyata et al. D12/92
D622,191 S * 8/2010 Yagi et al. D12/164
D630,555 S * 1/2011 Koshino et al. D12/92
D633,838 S * 3/2011 Loeb D12/196
D633,839 S * 3/2011 Matei et al. D12/196
D636,317 S * 4/2011 Matei et al. D12/196

* cited by examiner

Primary Examiner — Melody N Brown
(74) *Attorney, Agent, or Firm* — SAIDMAN DesignLaw Group

(57) **CLAIM**

The ornamental design for an automobile, as shown and described.

DESCRIPTION

FIG. **1** is a front, left perspective view of an automobile showing my new design;
FIG. **2** is a rear, left perspective view thereof;
FIG. **3** is a left side elevation view thereof, the right side view being a mirror image thereof;
FIG. **4** is a top view thereof;
FIG. **5** is a front elevation view thereof; and,
FIG. **6** is a rear elevation view thereof.
The broken lines illustrate portions of the automobile and form no part of the claimed design.
The claimed design is indicated by the relatively dark portions in the figures, while the relatively light portions are environmental and form no part of the claimed design.

1 Claim, 3 Drawing Sheets

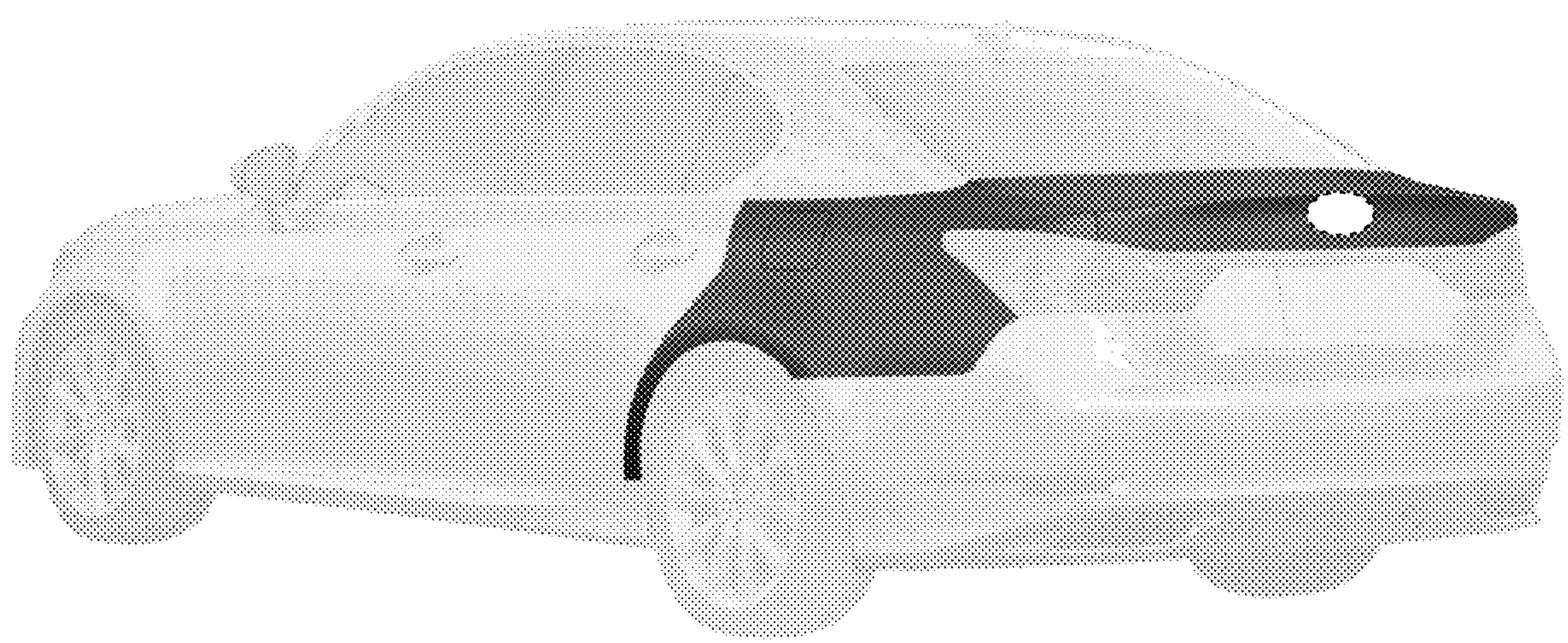

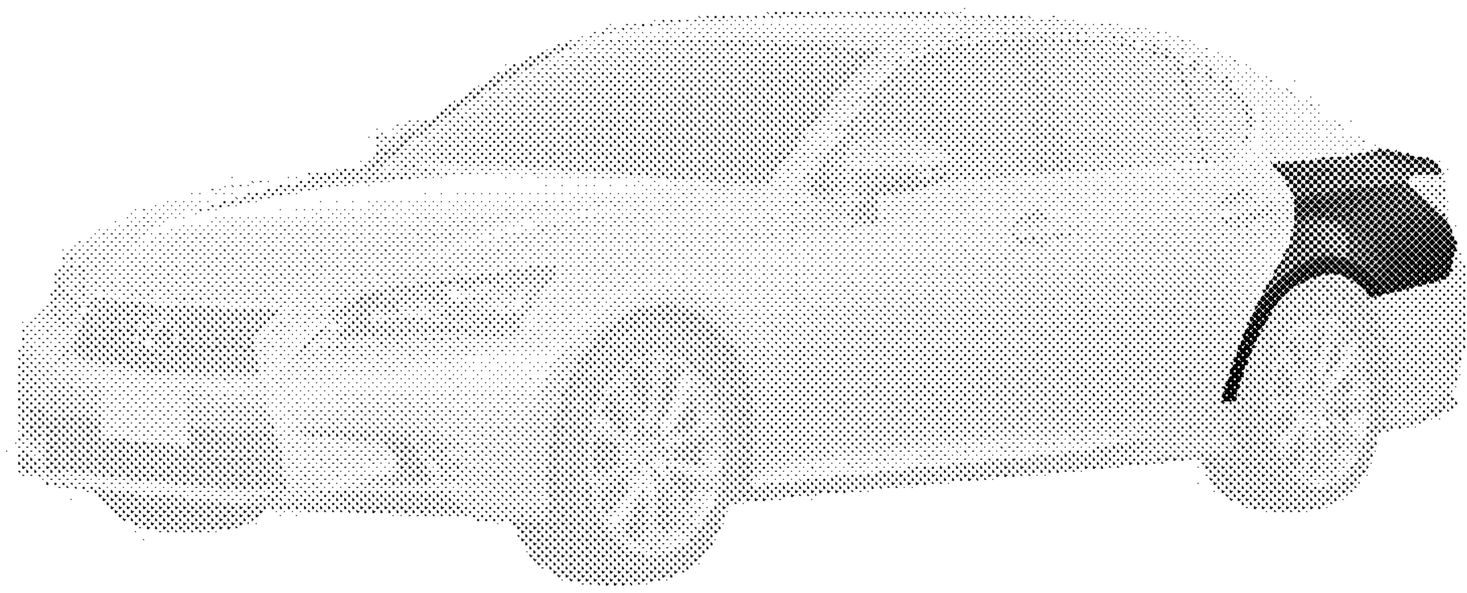

FIG. 1

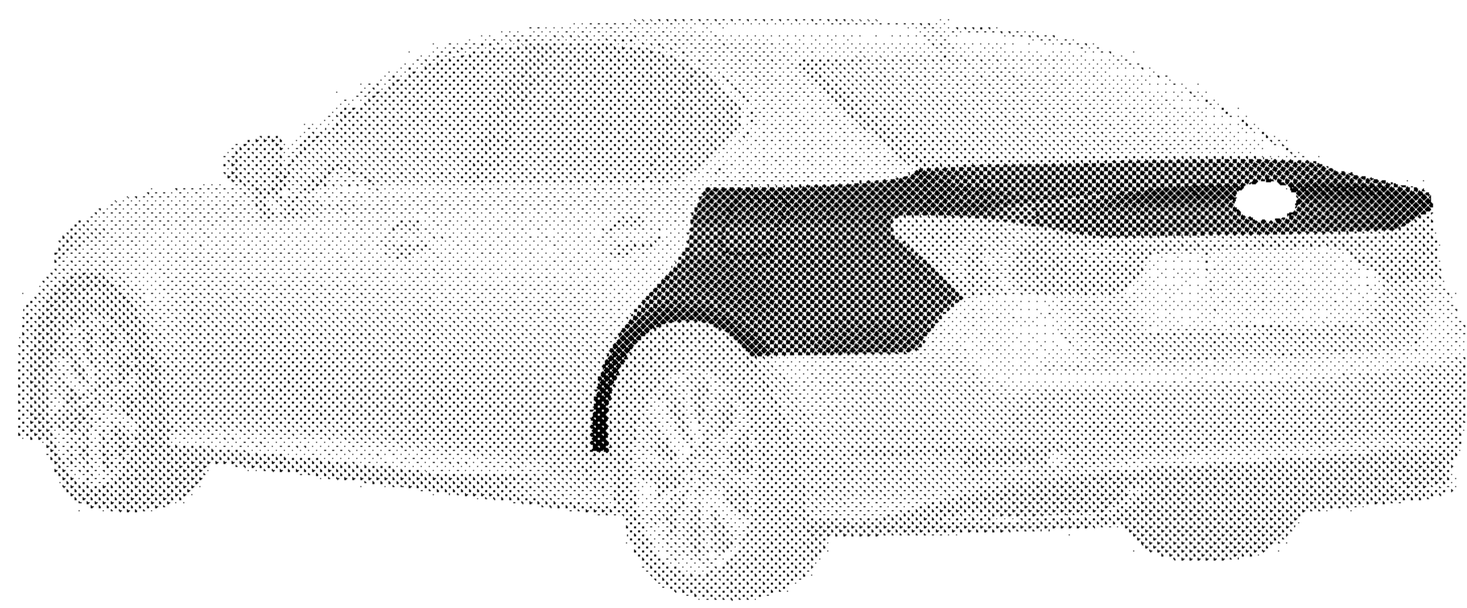

FIG. 2

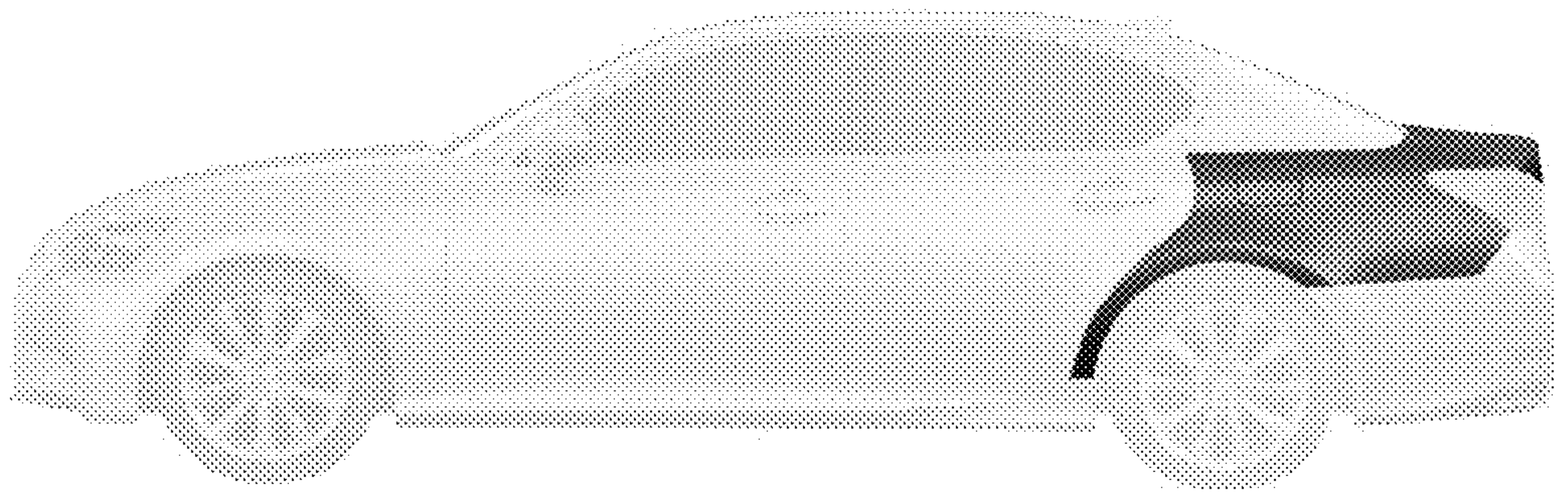

FIG. 3

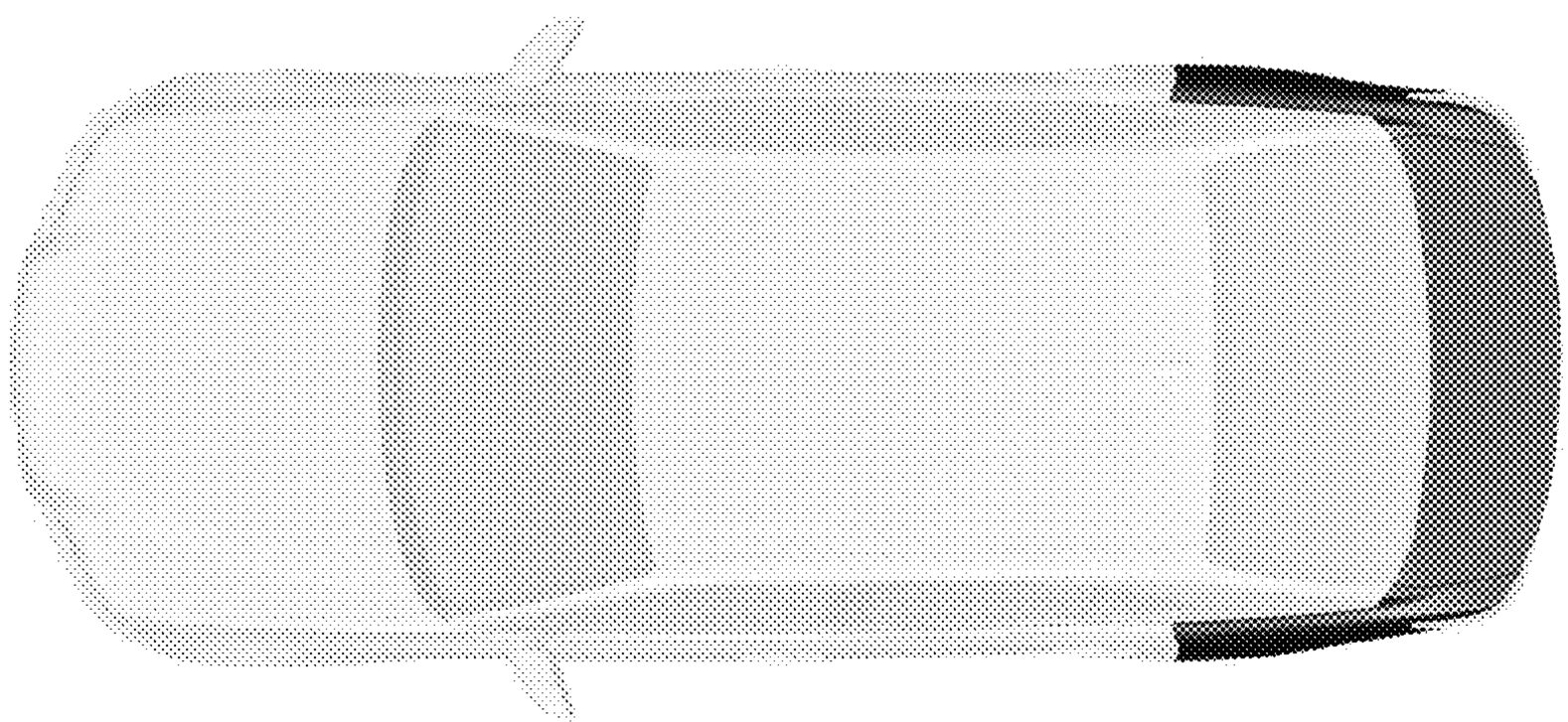

FIG. 4

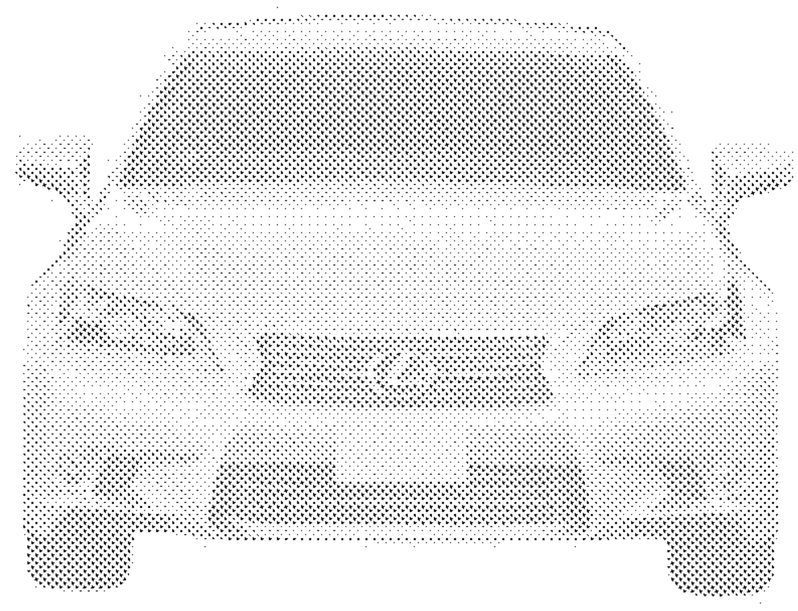

FIG. 5

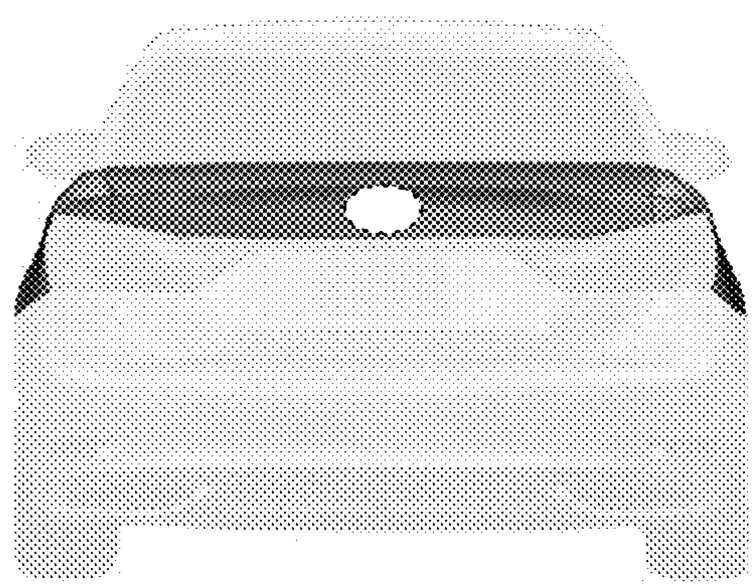

FIG. 6