US00D653833S

(12) United States Design Patent
Thompson et al.

(10) Patent No.: US D653,833 S
(45) Date of Patent: ** Feb. 7, 2012

(54) **ELECTRIC HYDRAULIC POWER STEP**

(76) Inventors: **Lewis E. Thompson**, Palm Coast, FL (US); **Janice H. Thompson**, Palm Coast, FL (US)

(**) Term: **14 Years**

(21) Appl. No.: **29/374,495**

(22) Filed: **Aug. 22, 2011**

(51) **LOC (9) Cl.** **12-05**
(52) **U.S. Cl.** **D34/28**
(58) **Field of Classification Search** D34/28, D34/33, 35; 187/200, 250; 414/540, 546, 414/550, 471, 545, 495
See application file for complete search history.

(56) **References Cited**

U.S. PATENT DOCUMENTS

3,549,030	A *	12/1970	Burkhalter et al.	414/537
4,113,121	A	9/1978	Collins et al.	
4,299,528	A	11/1981	Kazeil et al.	
4,304,518	A *	12/1981	Carder et al.	414/495
4,488,326	A *	12/1984	Cherry	14/72.5
D285,137	S *	8/1986	Svensson	D34/28
5,088,143	A *	2/1992	Alexander	14/69.5
5,113,969	A *	5/1992	Drolet et al.	182/2.11
D353,488	S *	12/1994	Lin	D3/318
5,542,811	A	8/1996	Vartanian	
5,564,884	A	10/1996	Farsai	
5,865,593	A	2/1999	Cohn	
6,062,805	A	5/2000	Tremblay et al.	
6,149,172	A	11/2000	Pascoe et al.	
6,309,170	B1	10/2001	Vartanian	
6,379,102	B1	4/2002	Kameda	
6,905,095	B1 *	6/2005	Gruzdeva et al.	244/137.1
7,152,726	B2 *	12/2006	Stotts	193/5
7,721,850	B2 *	5/2010	Coble	187/200
D640,854	S *	6/2011	Leum	D34/32
8,052,120	B2 *	11/2011	Bacon	254/93 HP
2006/0195220	A1	8/2006	Hayes et al.	
2006/0263183	A1	11/2006	Goodrich	
2010/0017976	A1 *	1/2010	Metz et al.	14/69.5

* cited by examiner

Primary Examiner — Cynthia Ramirez
(74) *Attorney, Agent, or Firm* — Richard L Miller

(57) **CLAIM**

The ornamental design for an electric hydraulic power step, as shown and described.

DESCRIPTION

FIG. **1** is a three quarter front, top, left perspective view of a electric hydraulic power step showing my new design;
FIG. **2** is a left side view thereof taken in the direction of arrow **2** in FIG. **7**, it being understood that a right side view is a mirror image of the left side view;
FIG. **3** is a front elevational view thereof, taken in the direction of arrow **3** in FIG. **7**;
FIG. **4** is a rear elevational view thereof, taken in the direction of arrow **4** in FIG. **7**;
FIG. **5** is a top plan view thereof, taken in the direction of arrow **5** in FIG. **7**;
FIG. **6** is a bottom plan view thereof, taken in the direction of arrow **6** in FIG. **7**; and,
FIG. **7** is a view identical to FIG. **1** with directional arrows included, in accordance with good engineering practices, so as to best indicate in what directions previous views are taken so that nothing regarding the design sought to be patented is ambiguous or left to conjecture.

1 Claim, 7 Drawing Sheets

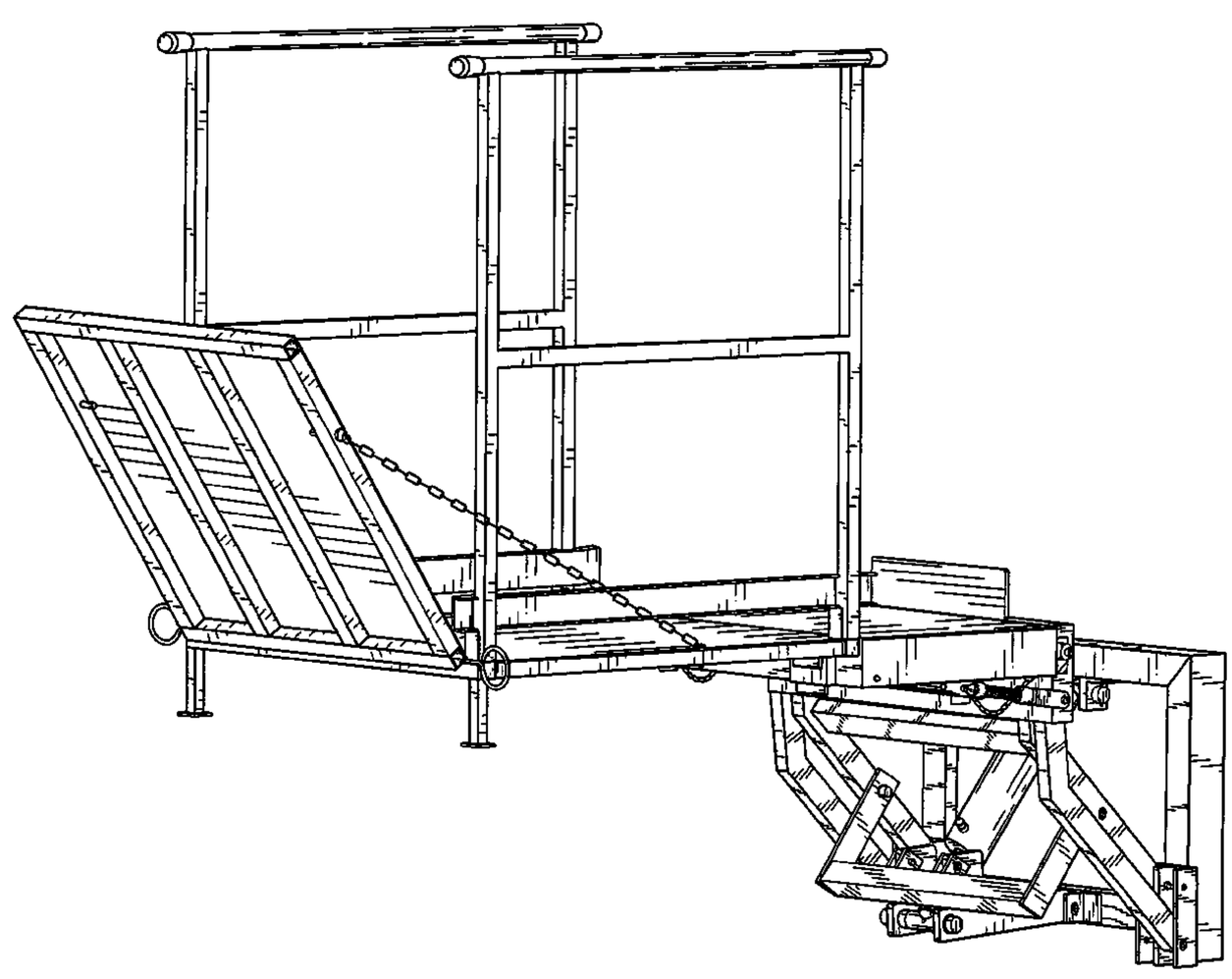

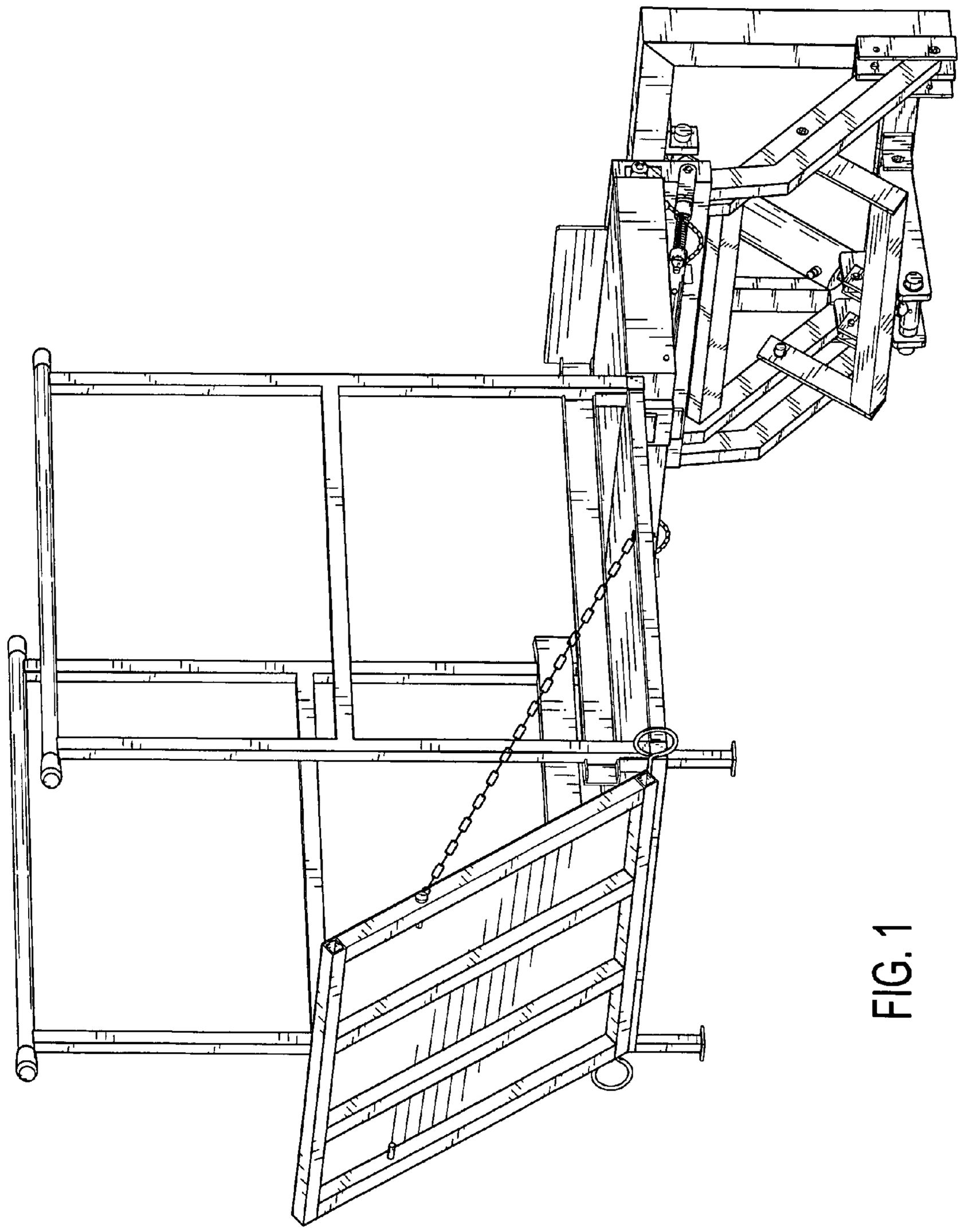

FIG. 1

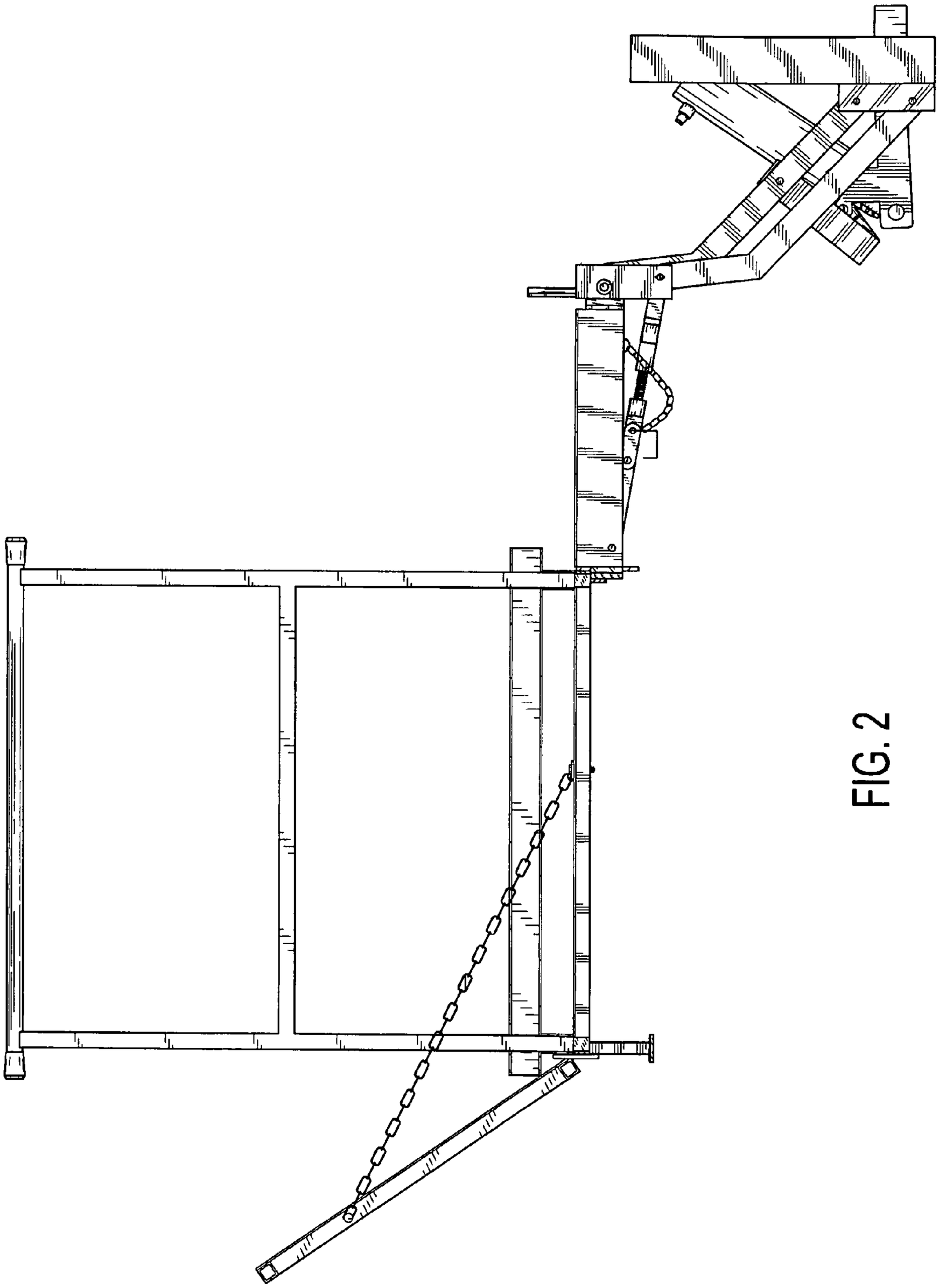

FIG. 2

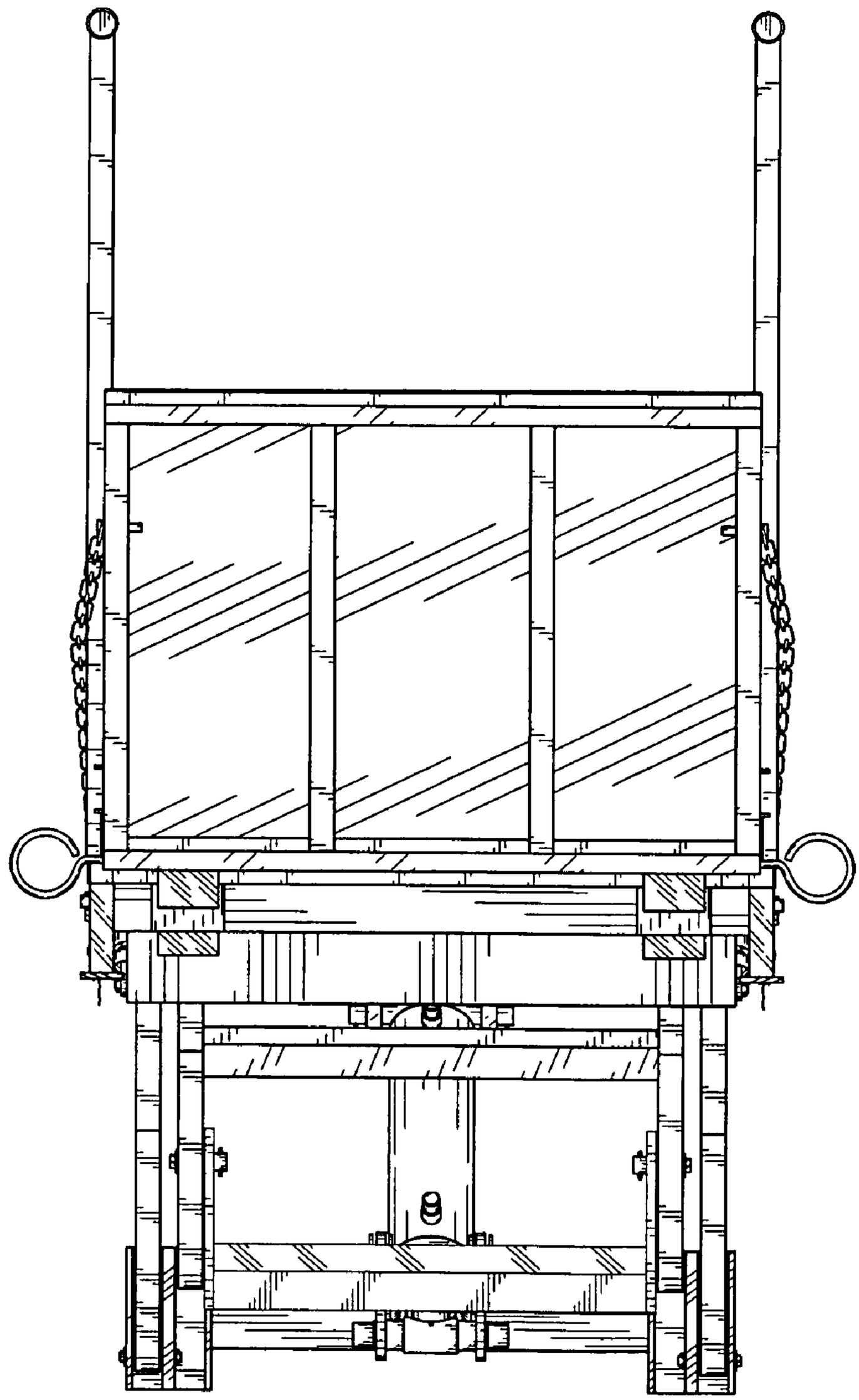

FIG. 3

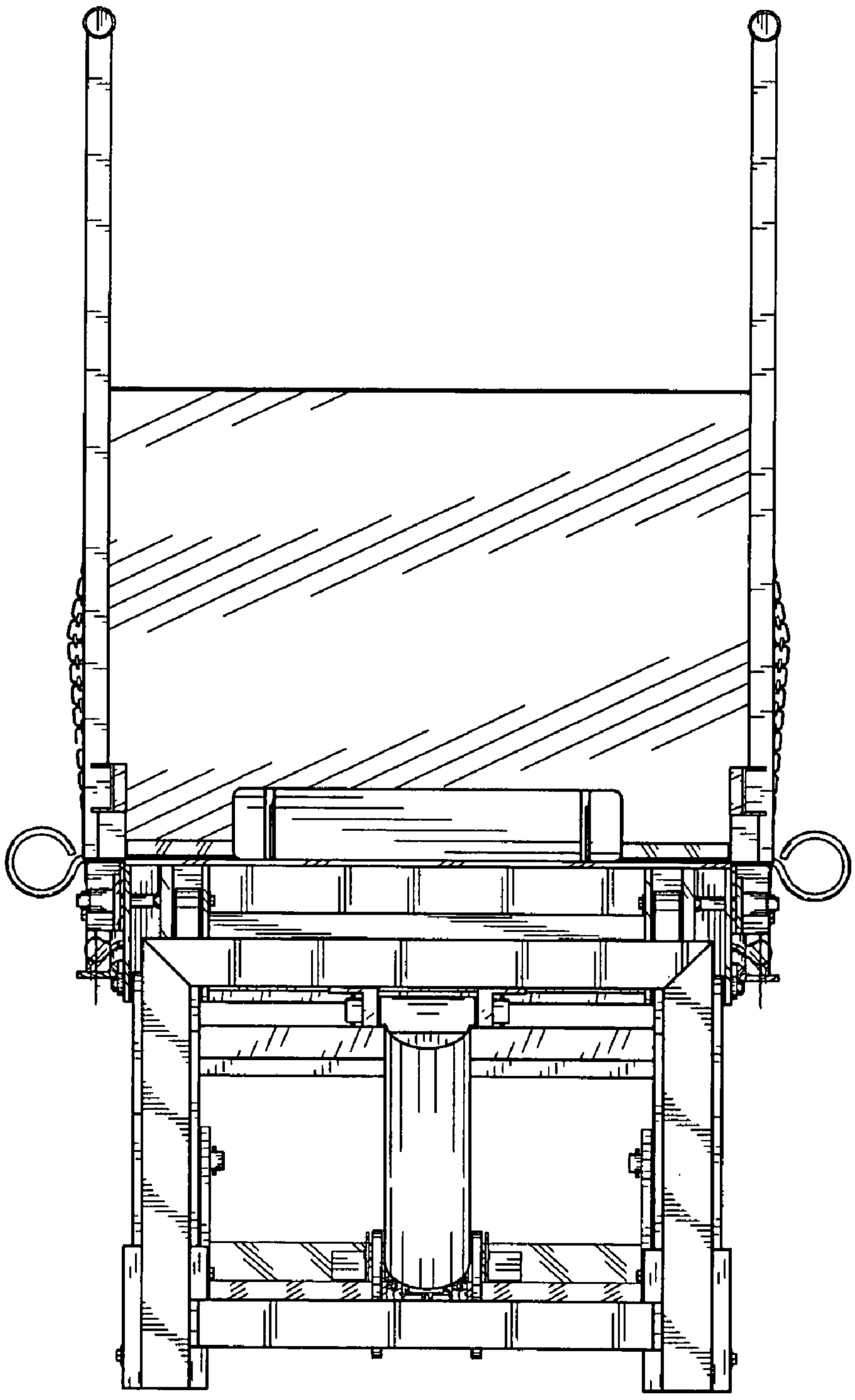

FIG. 4

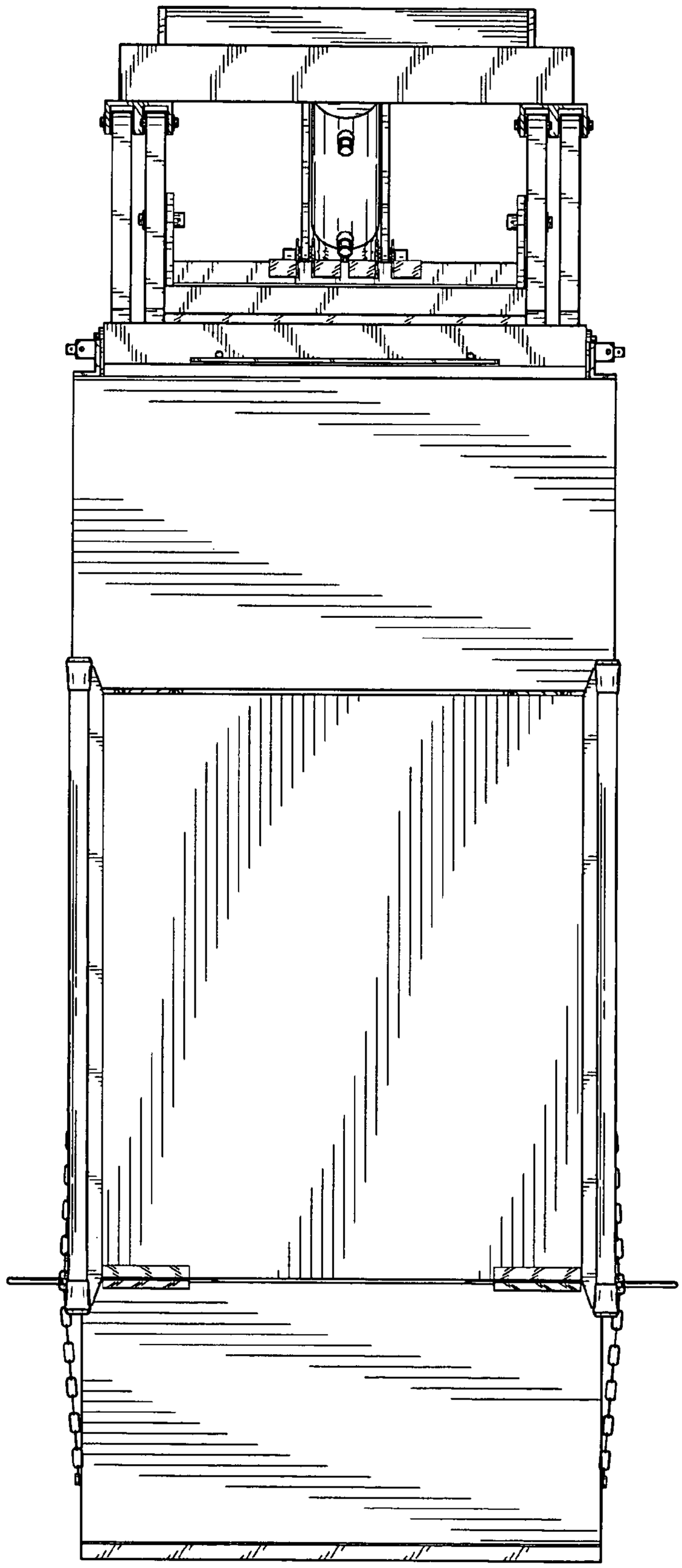

FIG. 5

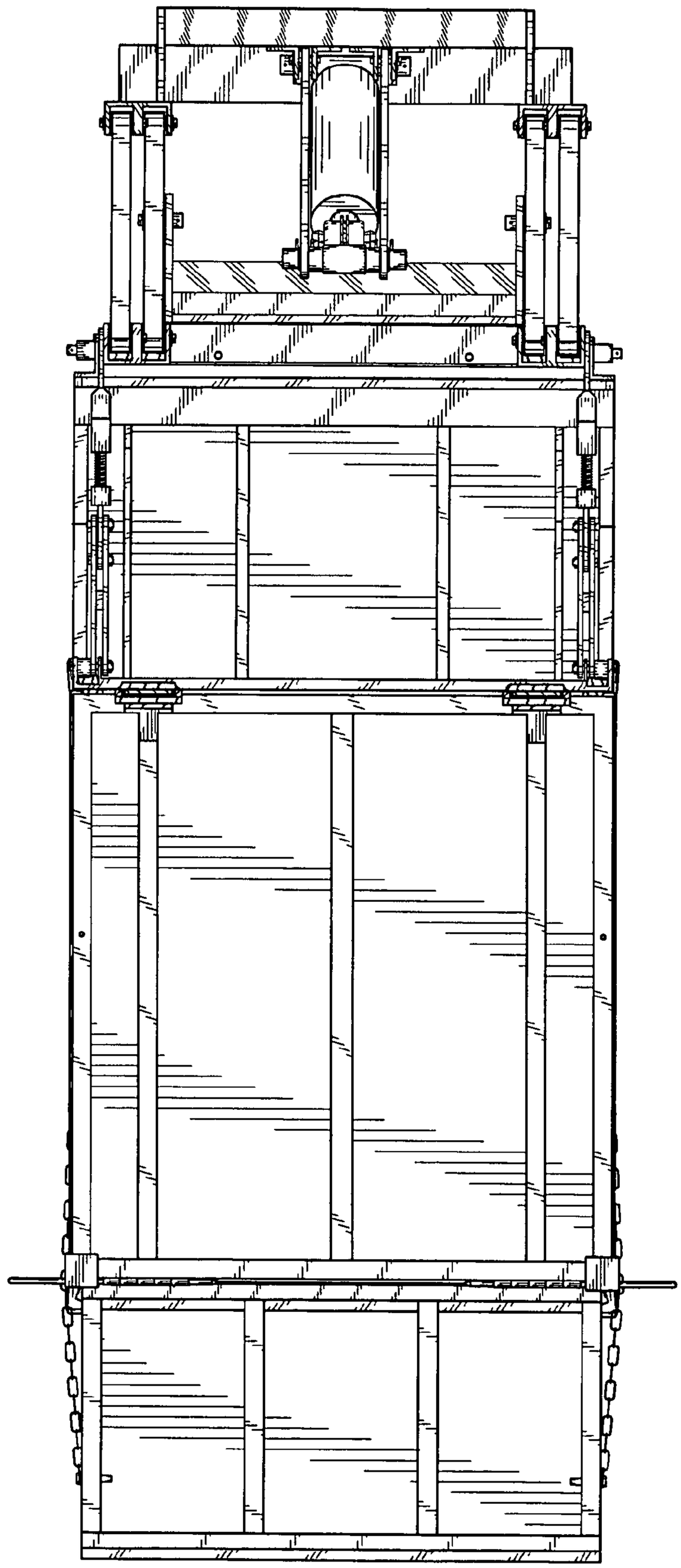

FIG. 6

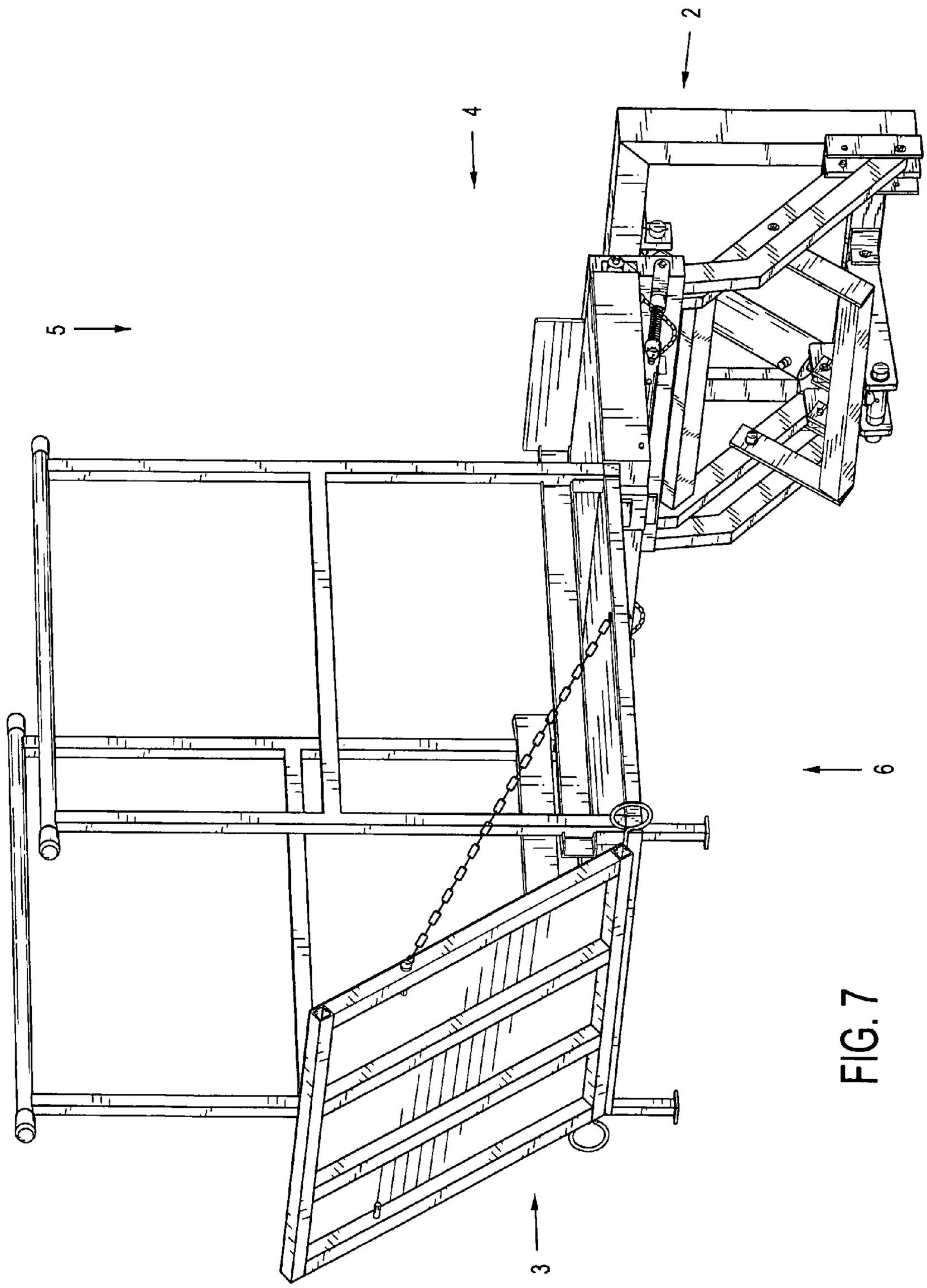

FIG. 7