US00D653222S

(12) United States Design Patent

Fukui et al.

(10) Patent No.: US D653,222 S
(45) Date of Patent: ** Jan. 31, 2012

(54) **LIGHT EMITTING DIODE**

(75) Inventors: **Kosei Fukui**, Aichi (JP); **Hideki Kokubu**, Aichi (JP); **Toshimasa Hayashi**, Aichi (JP)

(73) Assignee: **Toyoda Gosei Co., Ltd.**, Kiyosu-Shi, Aichi (JP)

(**) Term: **14 Years**

(21) Appl. No.: **29/371,490**

(22) Filed: **Mar. 21, 2011**

(30) **Foreign Application Priority Data**

Jan. 26, 2011 (JP) D2011-001504

(51) **LOC (9) Cl.** **13-03**
(52) **U.S. Cl.** **D13/180**
(58) **Field of Classification Search** D13/180; 257/79, 80, 81, 88, 89, 95, 98, 99, 100, E33.058; 313/483, 498, 500; 362/555, 800
See application file for complete search history.

(56) **References Cited**

U.S. PATENT DOCUMENTS

D509,487	S	*	9/2005	Ishida	D13/180
D578,491	S	*	10/2008	Lee et al.	D13/180
D589,911	S	*	4/2009	Lee et al.	D13/180
D593,515	S	*	6/2009	Nakagawa	D13/180
7,615,799	B2	*	11/2009	Su	257/99
D605,609	S	*	12/2009	Lee et al.	D13/180
D608,307	S	*	1/2010	Hussell et al.	D13/180
D609,654	S	*	2/2010	Hsieh	D13/180
D633,058	S	*	2/2011	Lin	D13/180
D635,526	S	*	4/2011	Hayashi	D13/180

FOREIGN PATENT DOCUMENTS

JP	1353076 D	3/2009

* cited by examiner

Primary Examiner — Selina Sikder
(74) *Attorney, Agent, or Firm* — McGinn IP Law Group, PLLC

(57) **CLAIM**

The ornamental design for a light emitting diode, as shown and described.

DESCRIPTION

FIG. **1** is a front perspective view of a light emitting diode showing our new design;
FIG. **2** is a rear perspective view thereof;
FIG. **3** is a front view thereof;
FIG. **4** is a rear view thereof;
FIG. **5** is a top plan view thereof;
FIG. **6** is a bottom view thereof;
FIG. **7** is a right side view thereof;
FIG. **8** is an end view taken along line **8-8** in FIG. **3**;
FIG. **9** is an end view taken along line **9-9** in FIG. **3**; and,
FIG. **10** is a reference front view showing transparent portion.
The ornamental design which is being claimed, as a partial design, is shown in solid lines in the drawings.
Since the left side view is symmetrical to the right side view, the left side view is omitted.
The broken line showing of the light emitting diode is for illustrative purposes only and form no part of the claimed design.

1 Claim, 10 Drawing Sheets

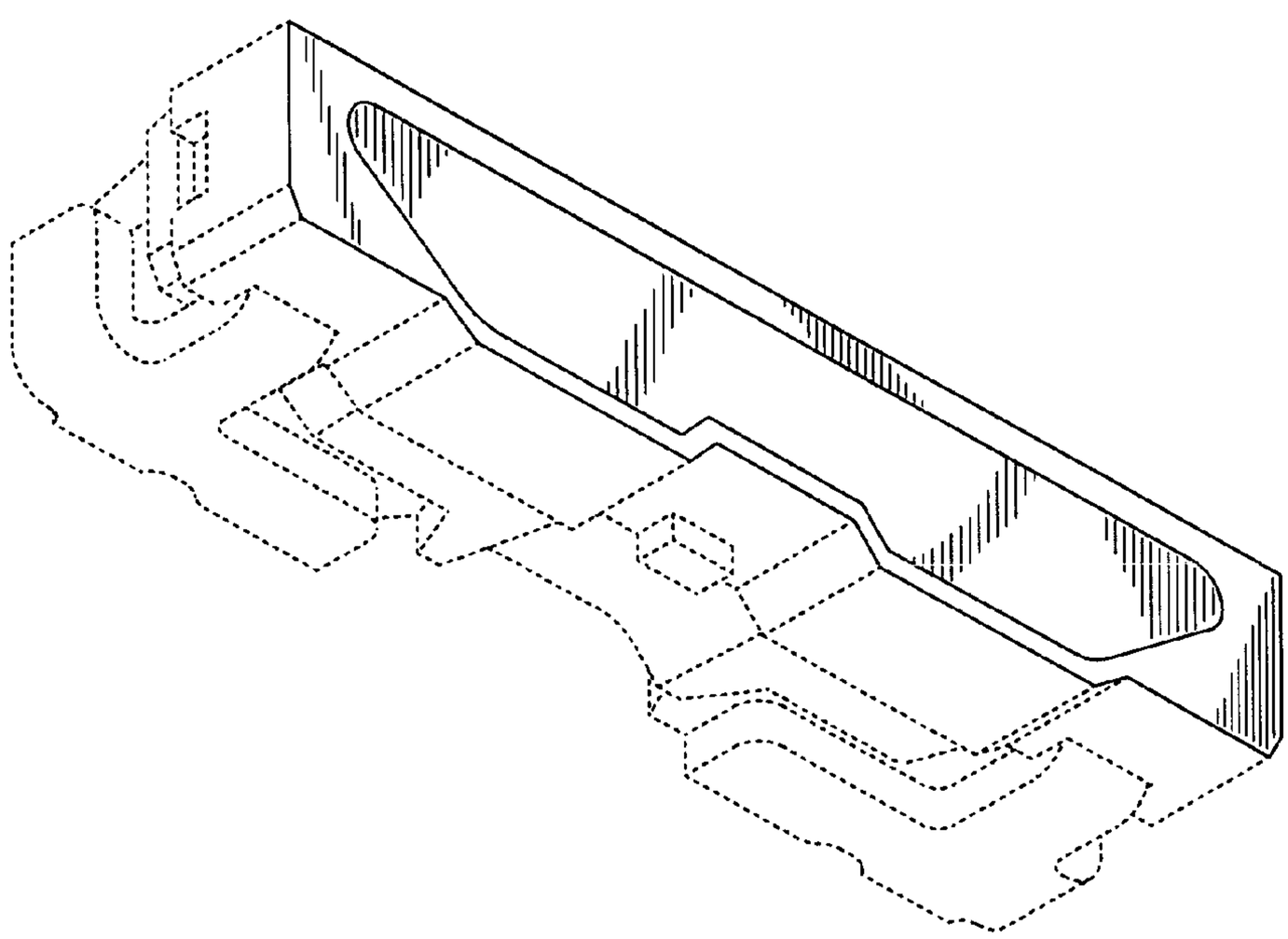

FIG. 1

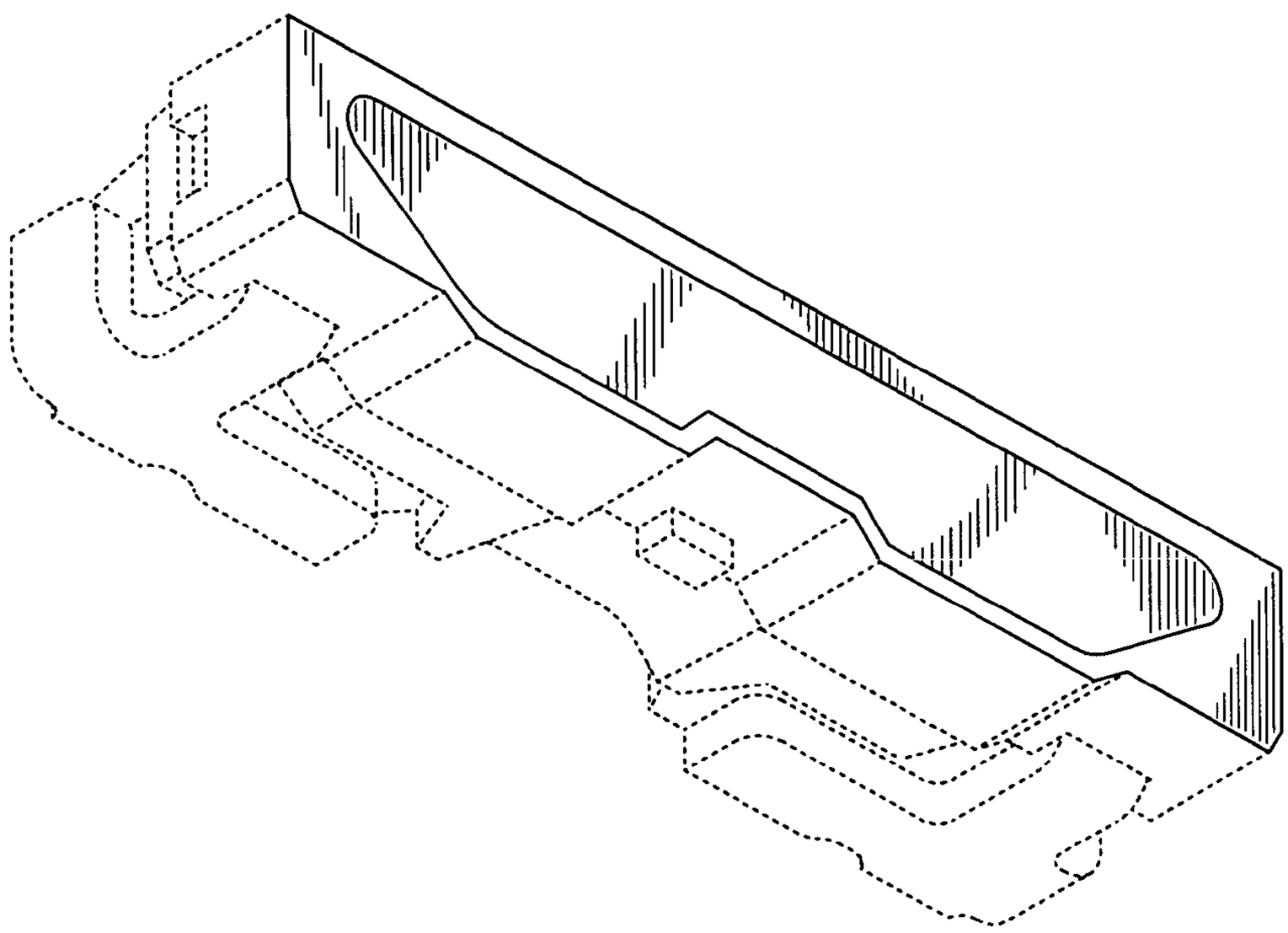

FIG. 2

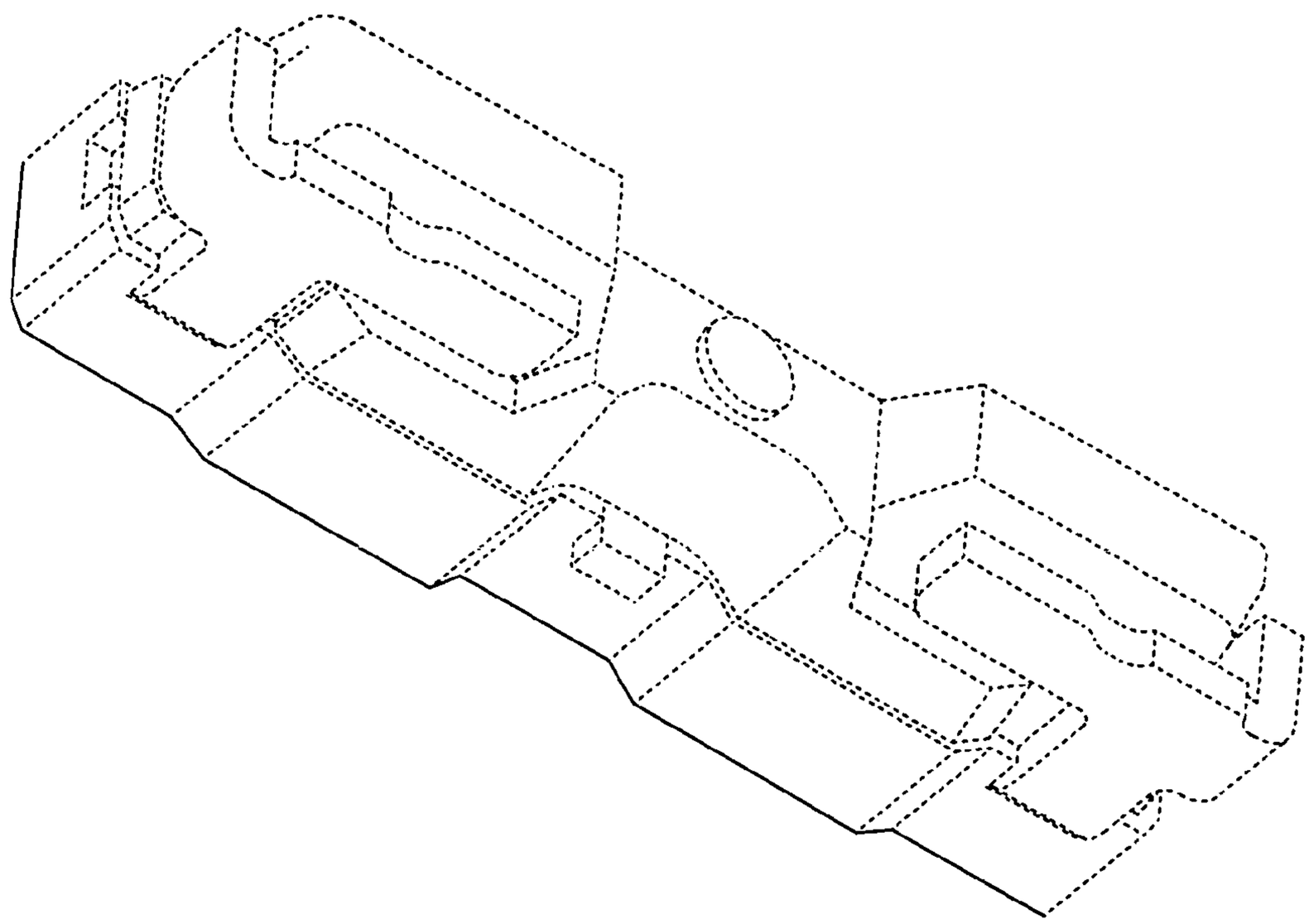

FIG. 3

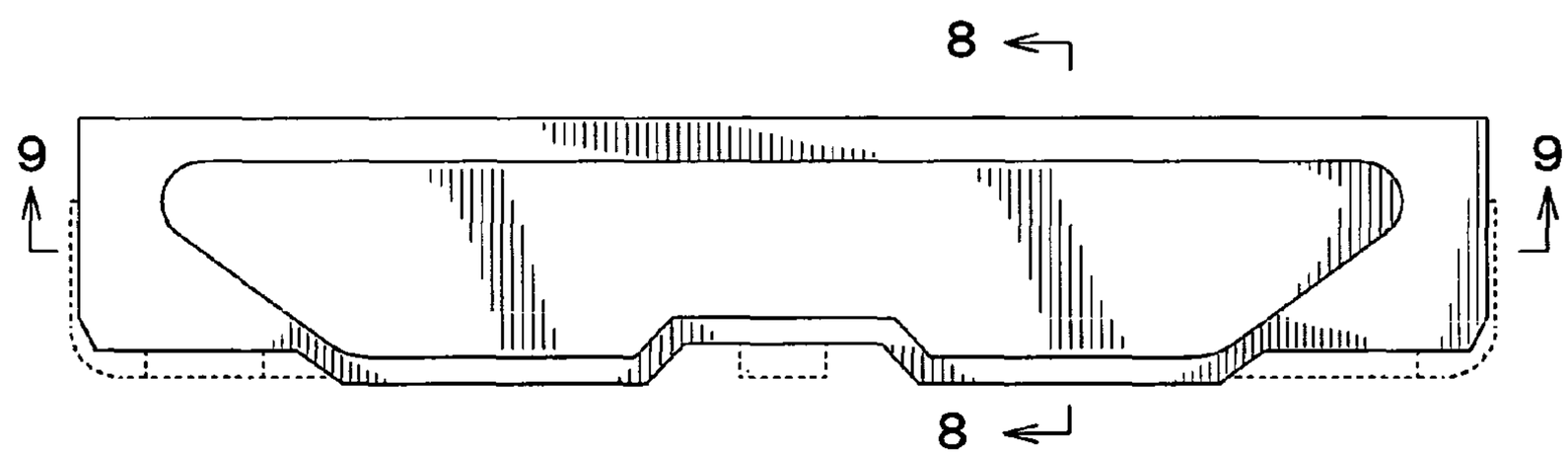

FIG. 4

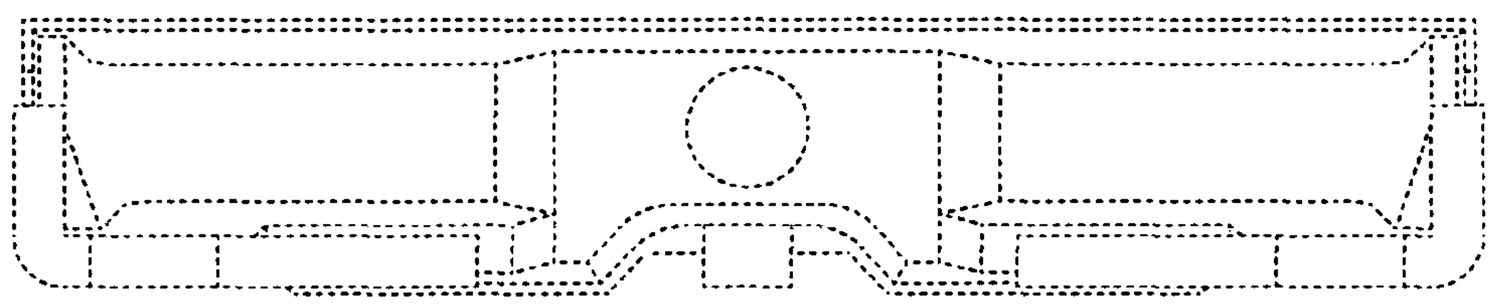

FIG. 5

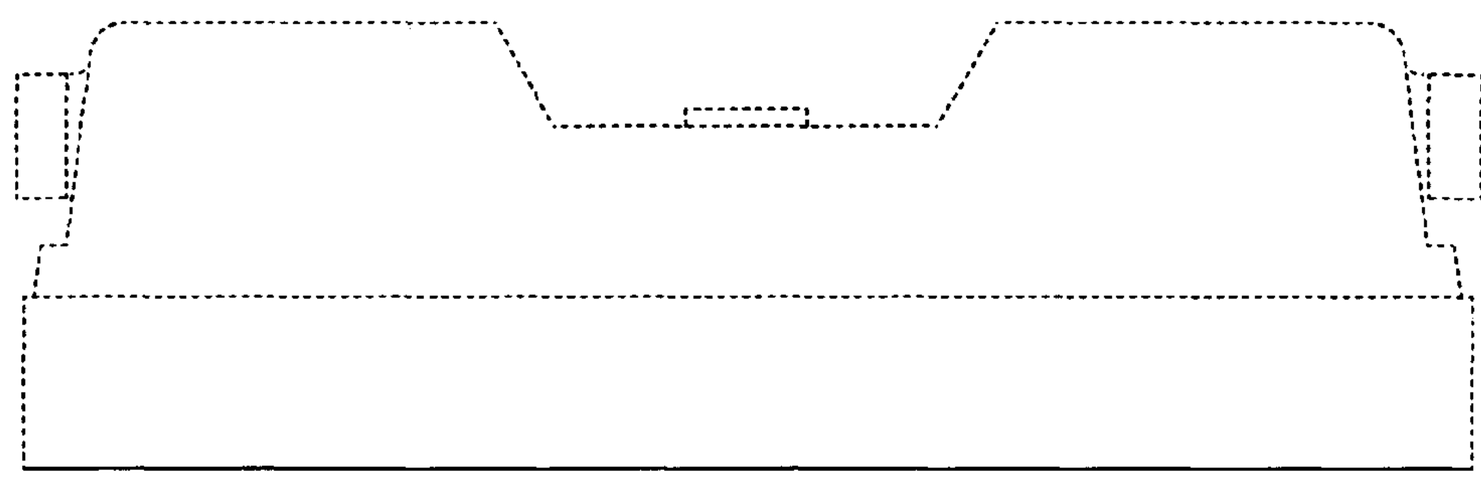

FIG. 6

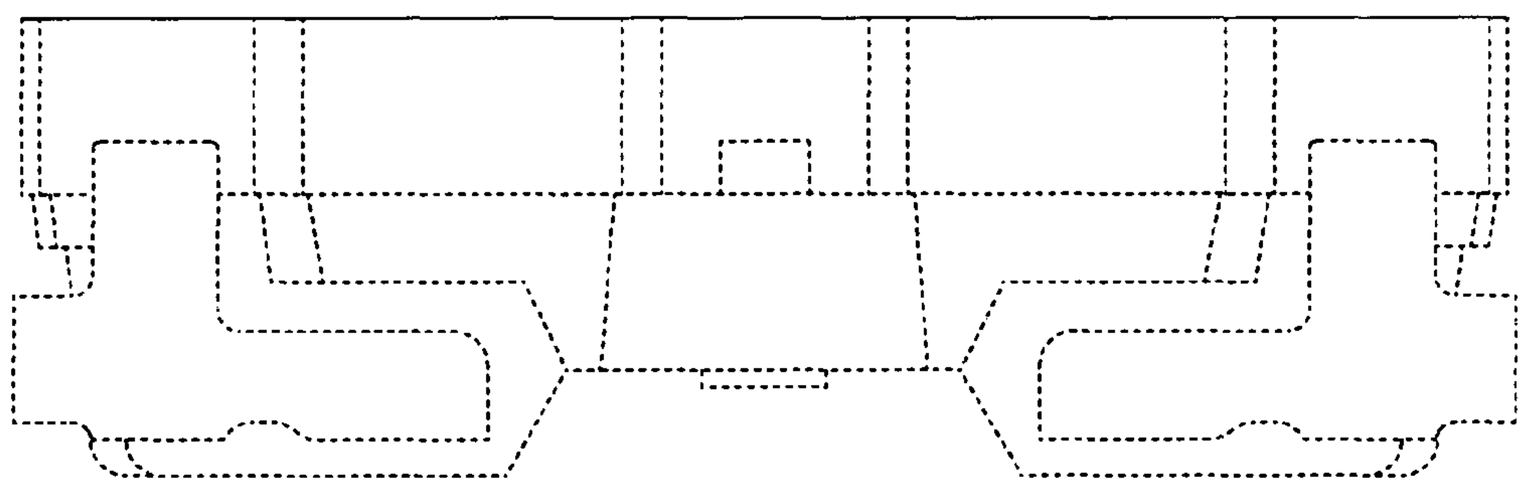

FIG. 7

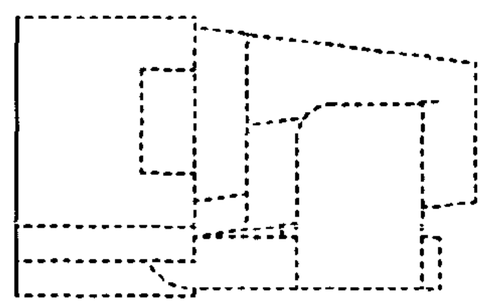

FIG. 8

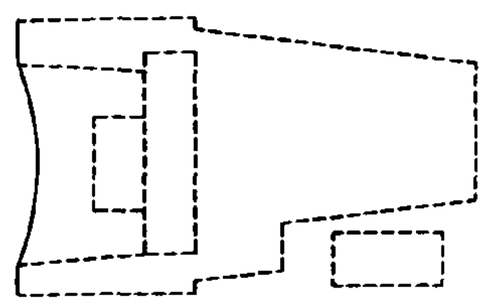

FIG. 9

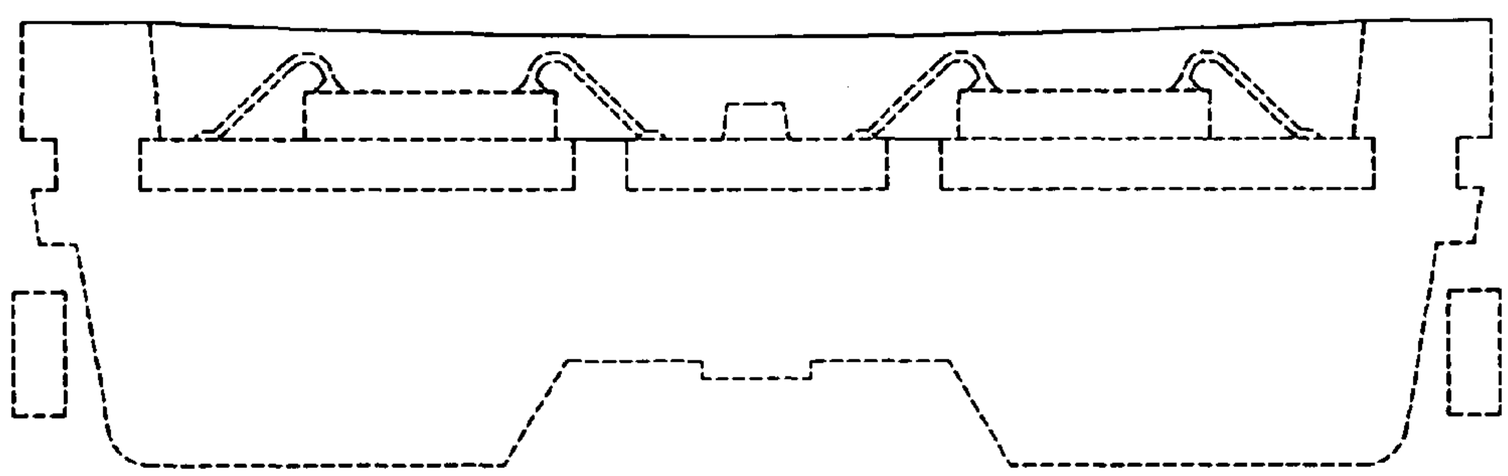
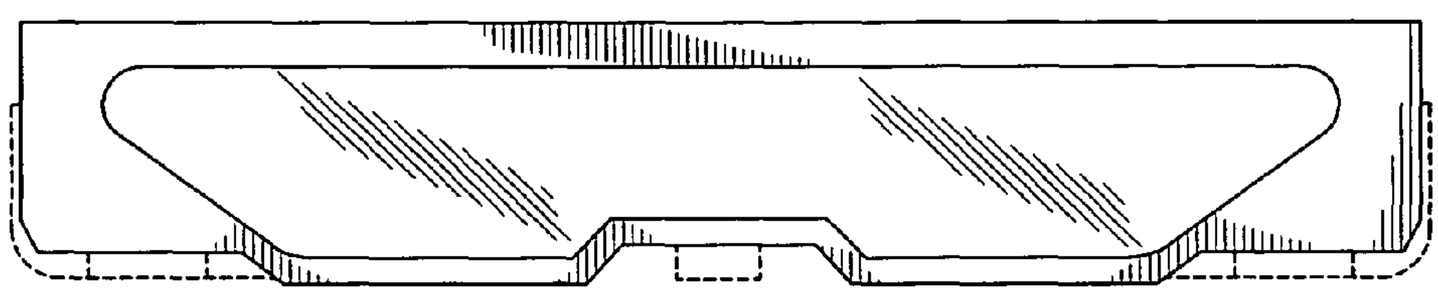
FIG. 10