US00D652122S

(12) United States Design Patent

Bonhag et al.

(10) Patent No.: US D652,122 S
(45) Date of Patent: ** Jan. 10, 2012

(54) **BUILDING COMPONENT**

(75) Inventors: **Ehrenfried Bonhag**, Schwabach (DE); **Hansi Homburg**, Höchstadt a. d. Aisch (DE)

(73) Assignee: **Rehau AG + Co.**, Rehau (DE)

(**) Term: **14 Years**

(21) Appl. No.: **29/378,509**

(22) Filed: **Nov. 5, 2010**

Related U.S. Application Data

(62) Division of application No. 29/341,410, filed on Aug. 5, 2009.

(51) **LOC (9) Cl.** **23-01**

(52) **U.S. Cl.** **D23/263**

(58) **Field of Classification Search** D23/259–263; D8/387, 397; 4/286–287; 114/197; 138/89, 138/91, 158; 217/110; 220/288; 222/552, 222/554, 546, 563; 285/139.1, 148.18, 148.23, 285/242, 251, 256, 353, 423, 921; 174/665, 174/68.1, 68.3; 52/220.7

See application file for complete search history.

(56) **References Cited**

U.S. PATENT DOCUMENTS

D163,487	S	*	5/1951	Schustack	D23/263
D254,505	S	*	3/1980	Parsons et al.	D23/262
5,076,095	A	*	12/1991	Erhardt	73/49.8
D368,304	S	*	3/1996	Morrison	D23/262
D389,562	S	*	1/1998	Picton	D23/263
D407,802	S	*	4/1999	Hatfield et al.	D23/262
D453,815	S	*	2/2002	Hoenig	D23/259
D454,940	S	*	3/2002	Hoenig	D23/259
D475,780	S	*	6/2003	Stout, Jr.	D23/393
D480,786	S	*	10/2003	Wilk et al.	D23/263
D481,109	S	*	10/2003	Dole et al.	D23/263
D481,110	S	*	10/2003	Snyder et al.	D23/263
D482,103	S	*	11/2003	Snyder et al.	D23/263
D517,176	S	*	3/2006	Wilk et al.	D23/262
D518,559	S	*	4/2006	Ostergaard et al.	D23/262
D527,091	S	*	8/2006	Stout, Jr.	D23/393
7,281,411	B2	*	10/2007	Brewer	73/49.1
D582,457	S	*	12/2008	Davies et al.	D15/199
D614,737	S	*	4/2010	Lass	D23/262
D615,631	S	*	5/2010	Price et al.	D23/263
D627,863	S	*	11/2010	Ball	D23/262

* cited by examiner

Primary Examiner — Celia A. Murphy
Assistant Examiner — John Windmuller
(74) *Attorney, Agent, or Firm* — Moetteli & Associés SáRL

(57) **CLAIM**

The ornamental design for a building component, as shown and described.

DESCRIPTION

FIG. **1** is a plan view of a building component showing our new design.
FIG. **2** is a perspective view of the building component showing our new design.
FIG. **3** is a left side view of the building component showing our new design.
FIG. **4** is a right side view of the building component showing our new design; and,
FIG. **5** is a rear view of the building component showing our new design.
In FIG. **3**, the broken lines indicate an interior portion of the component that forms no part of the claimed design.

1 Claim, 5 Drawing Sheets

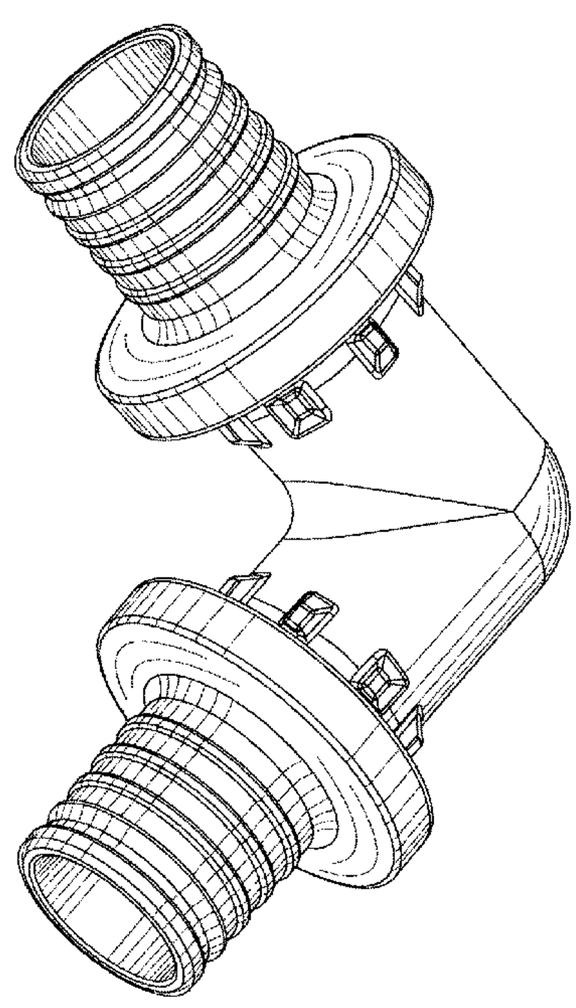

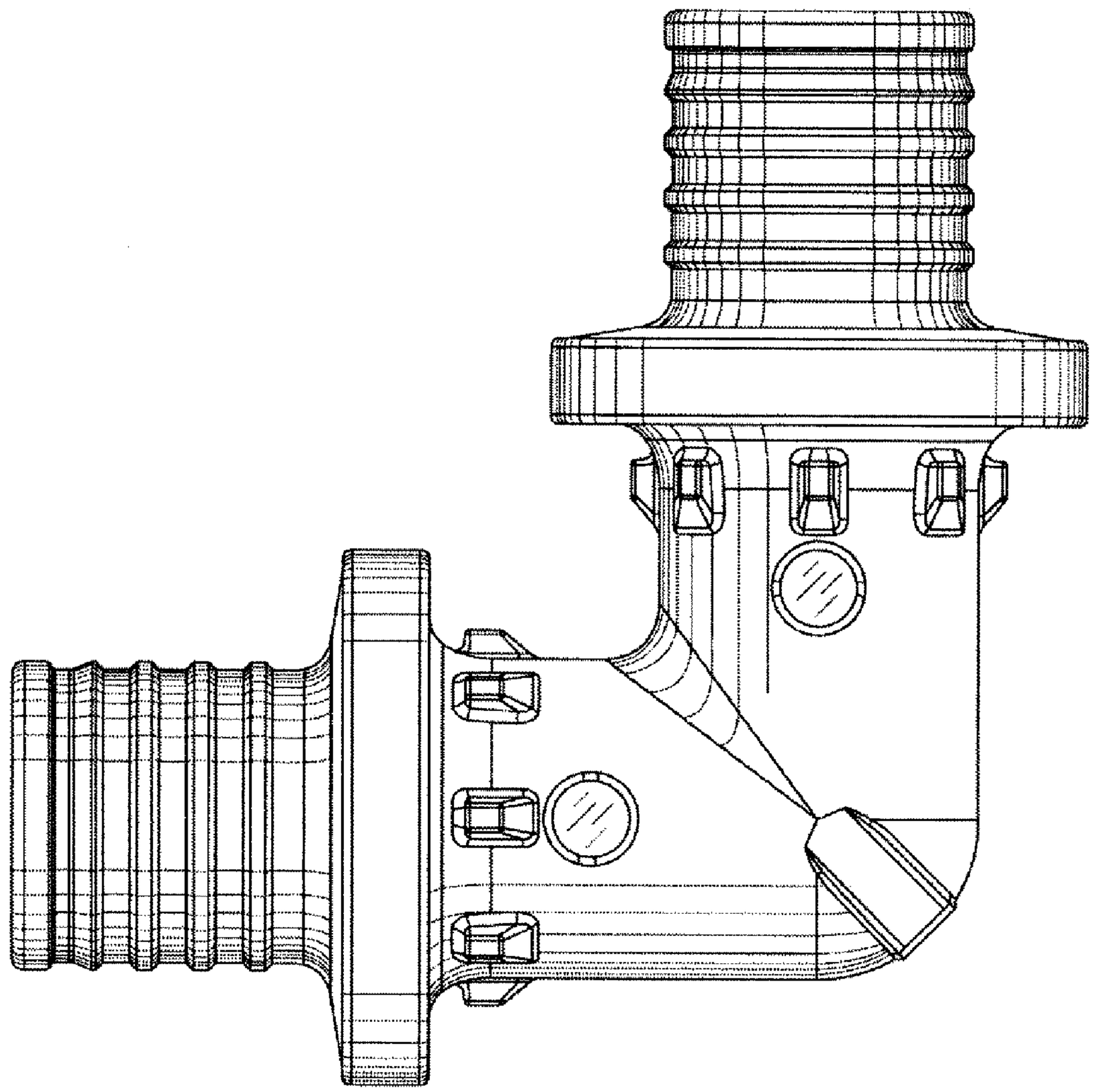

FIG. 1

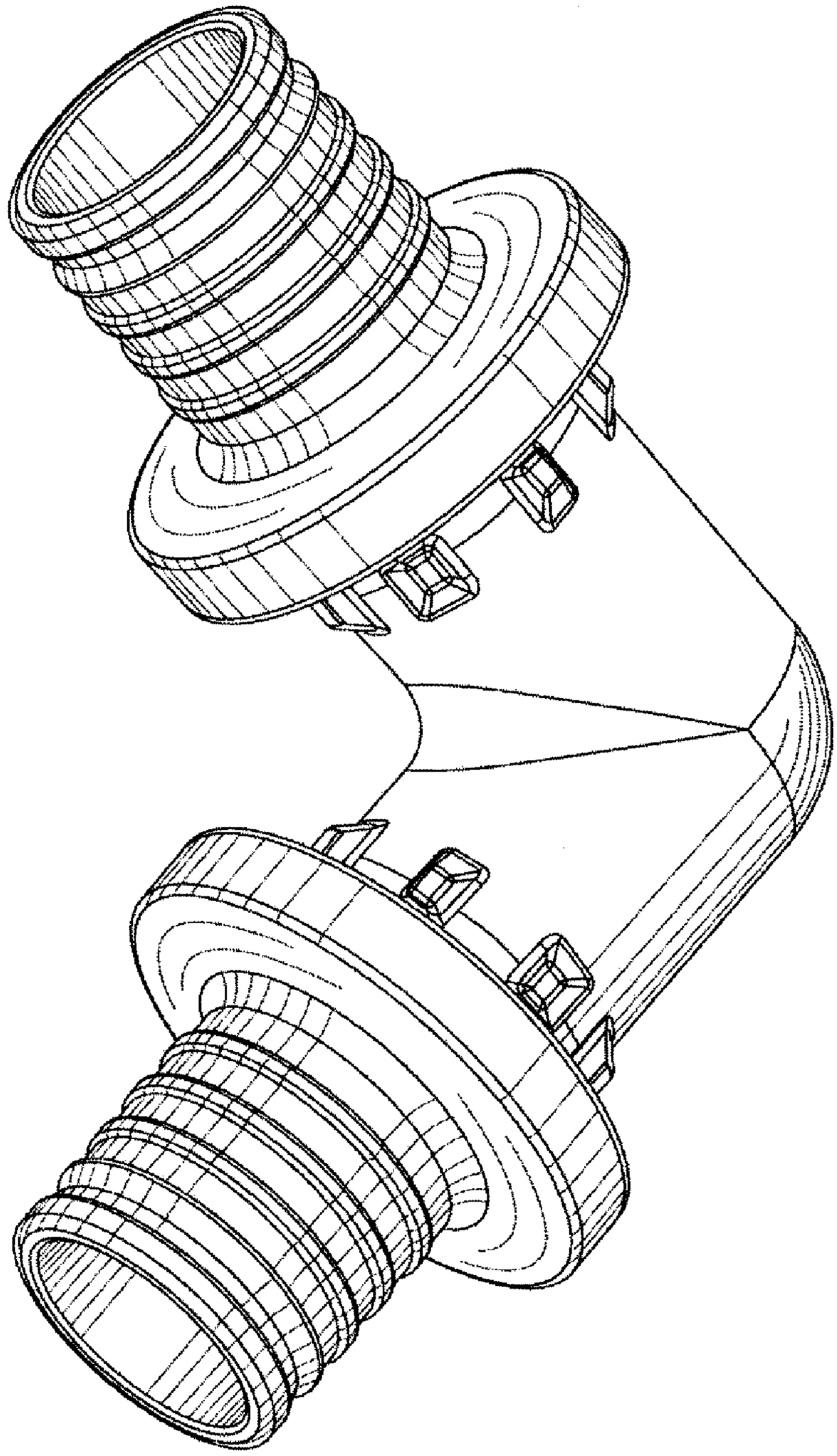

FIG. 2

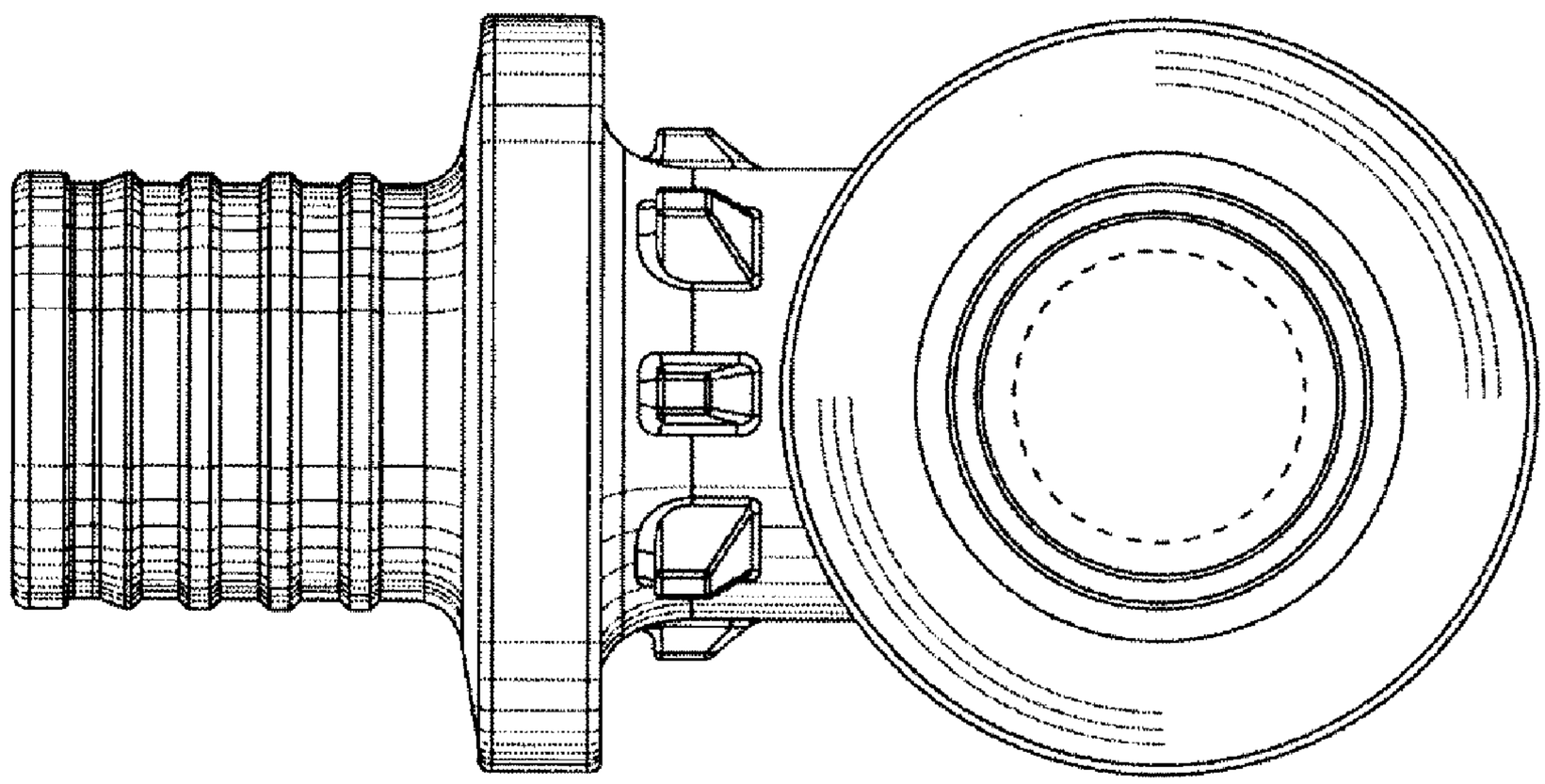

FIG. 3

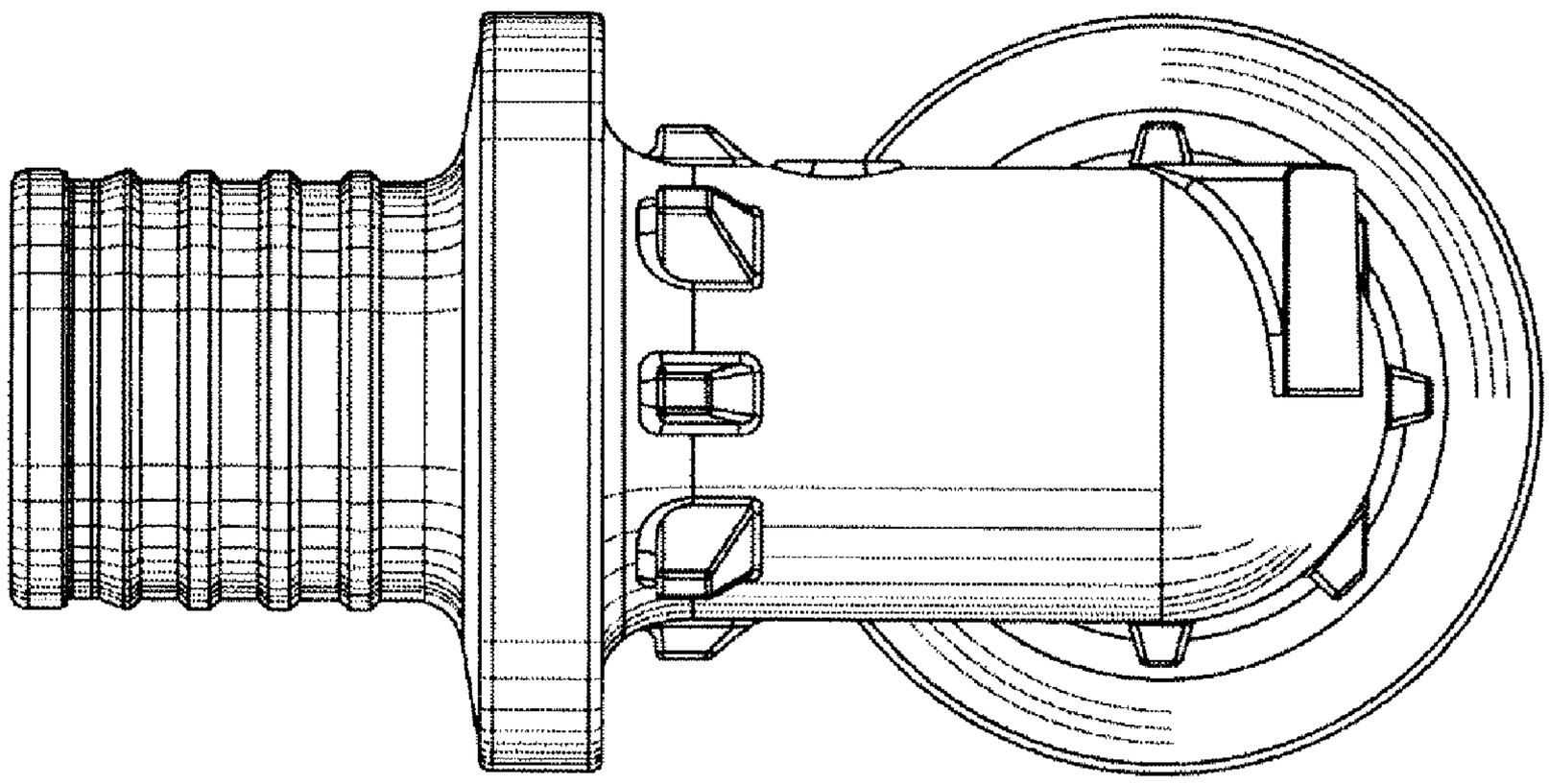

FIG. 4

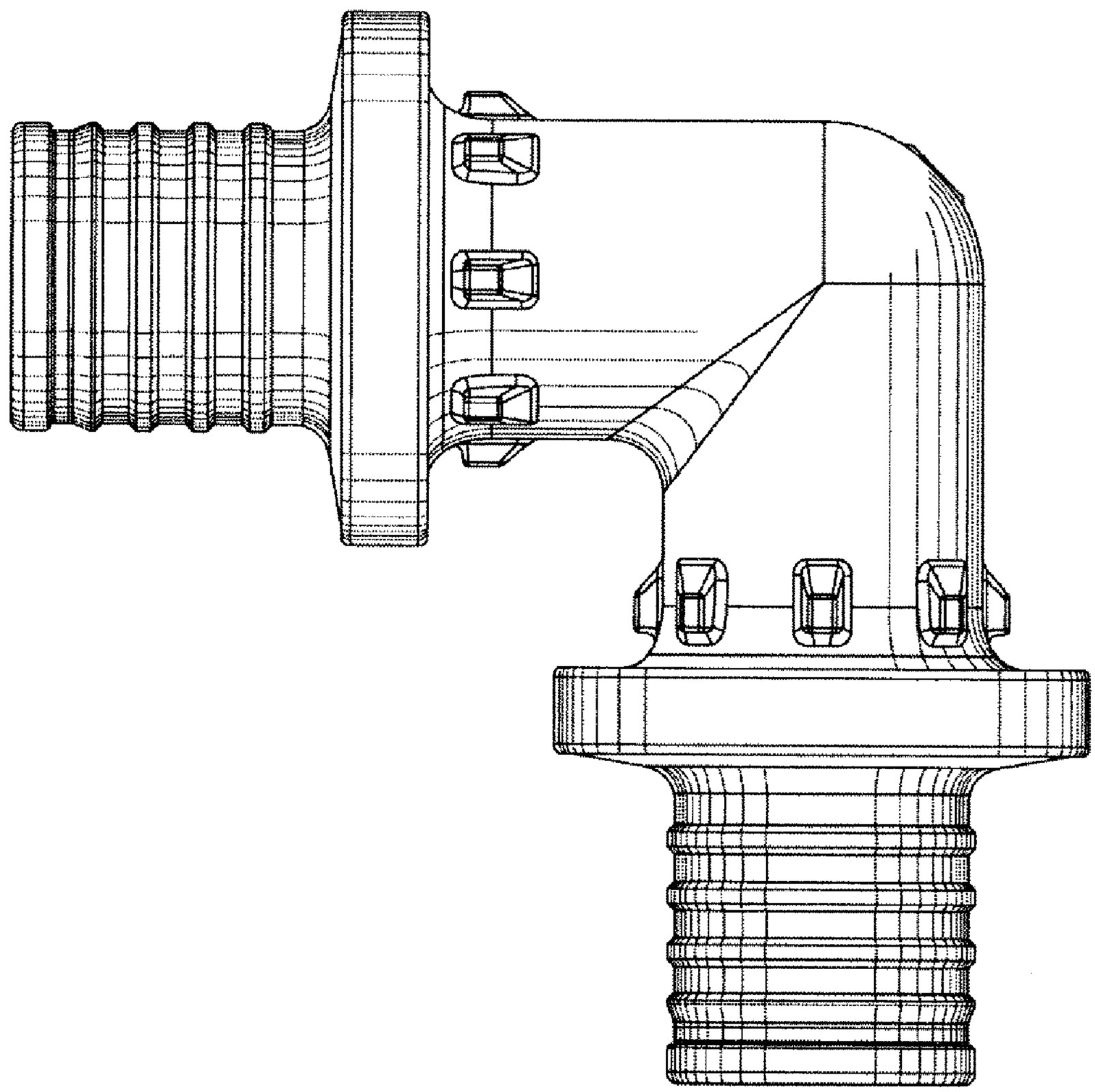

FIG. 5