US00D651213S

(12) United States Design Patent

Magness et al.

(10) Patent No.: US D651,213 S
(45) Date of Patent: ** Dec. 27, 2011

(54) **STAND**

(75) Inventors: **Cameron Magness**, Fort Collins, CO (US); **Matthew Glanzer**, Fort Collins, CO (US)

(73) Assignee: **Otter Products, LLC**, Fort Colins, CO (US)

(**) Term: **14 Years**

(21) Appl. No.: **29/384,935**

(22) Filed: **Feb. 6, 2011**

(51) **LOC (9) Cl.** **14-02**

(52) **U.S. Cl.** **D14/447**

(58) **Field of Classification Search** D14/447, D14/448, 451, 452, 432, 434, 439, 440, 457, D14/460, 461, 239, 250, 251, 253, 217, 238.1; D3/218; D6/310, 312, 311, 406.3, 406.4, D6/406.5, 406.6, 419; 248/917–924, 688, 248/441.1, 451, 454, 460, 463, 136, 149, 248/150, 164, 166, 176.2, 176.3, 176.1, 346.03, 248/346.3; 361/679.02, 679.09, 679.21, 361/679.22, 379.26, 679.27, 679.28, 679.29, 361/679.3, 679.46, 679.47, 679.48, 679.55, 361/679.56, 679.57, 679.58, 679.59, 679.6; 150/165; 224/929, 930

See application file for complete search history.

(56) **References Cited**

U.S. PATENT DOCUMENTS

D279,185	S	*	6/1985	Felix et al.	D14/251
5,607,135	A	*	3/1997	Yamada	248/456
D558,774	S	*	1/2008	Najima	D14/447
D573,598	S	*	7/2008	Chu	D14/447
D626,964	S	*	11/2010	Richardson et al.	D14/447
7,861,995	B2	*	1/2011	Liou	248/454
D637,583	S	*	5/2011	Beal et al.	D14/217
D639,815	S	*	6/2011	Lye	D14/447
D639,816	S	*	6/2011	Bau	D14/447
2004/0007649	A1	*	1/2004	Vettraino	248/127
2006/0186303	A1	*	8/2006	Phifer et al.	248/454
2009/0179132	A1	*	7/2009	Qin et al.	248/371
2010/0090085	A1	*	4/2010	Corrion	248/459

* cited by examiner

Primary Examiner — Angela J Lee

(57) **CLAIM**

The ornamental design for a stand, as shown and described.

DESCRIPTION

FIG. **1** is a front isometric view of a stand showing our new design;
FIG. **2** is a rear isometric view thereof;
FIG. **3** is a front view thereof;
FIG. **4** is a rear view thereof;
FIG. **5** is a left view thereof;
FIG. **6** is a right view thereof;
FIG. **7** is a top view thereof;
FIG. **8** is a bottom view thereof;
FIG. **9** is a front isometric view of a stand in an alternate configuration; and,
FIG. **10** is a top view of a stand in an alternate configuration.

The broken line perimeters of the large unshaded regions of the stand represents a boundary of the claimed design. All other broken lines depict unclaimed environment. The broken lines and unshaded regions bounded by broken lines form no part of the claimed design.

1 Claim, 10 Drawing Sheets

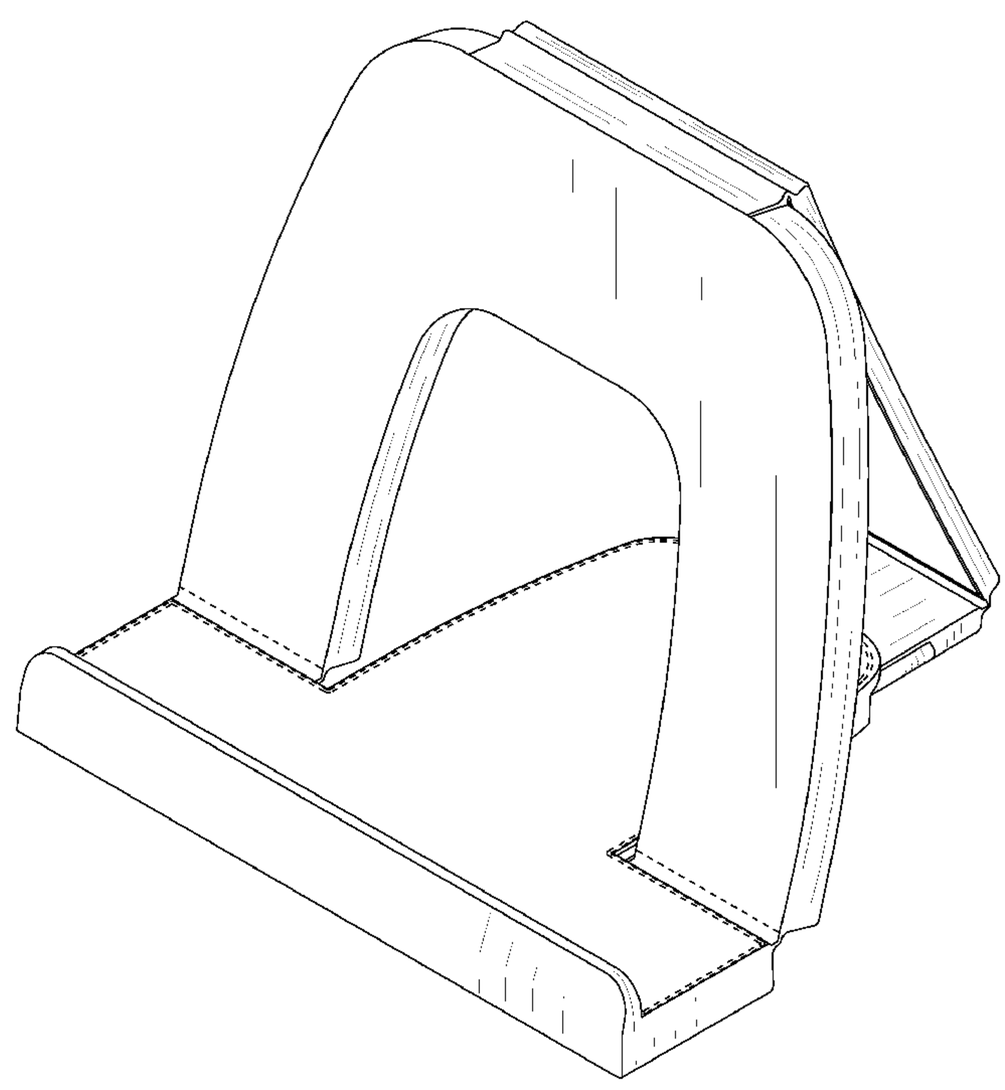

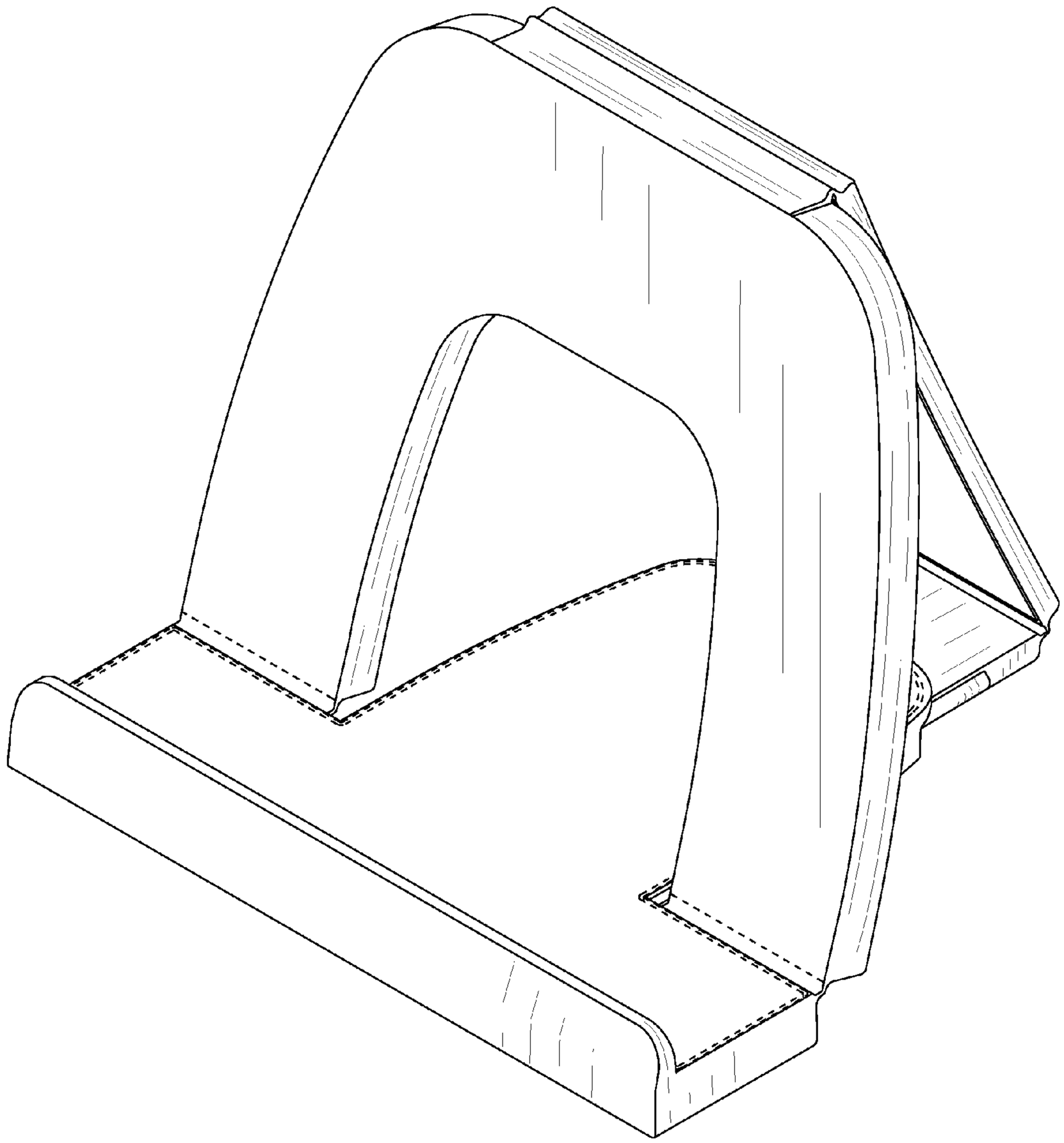

FIG. 1

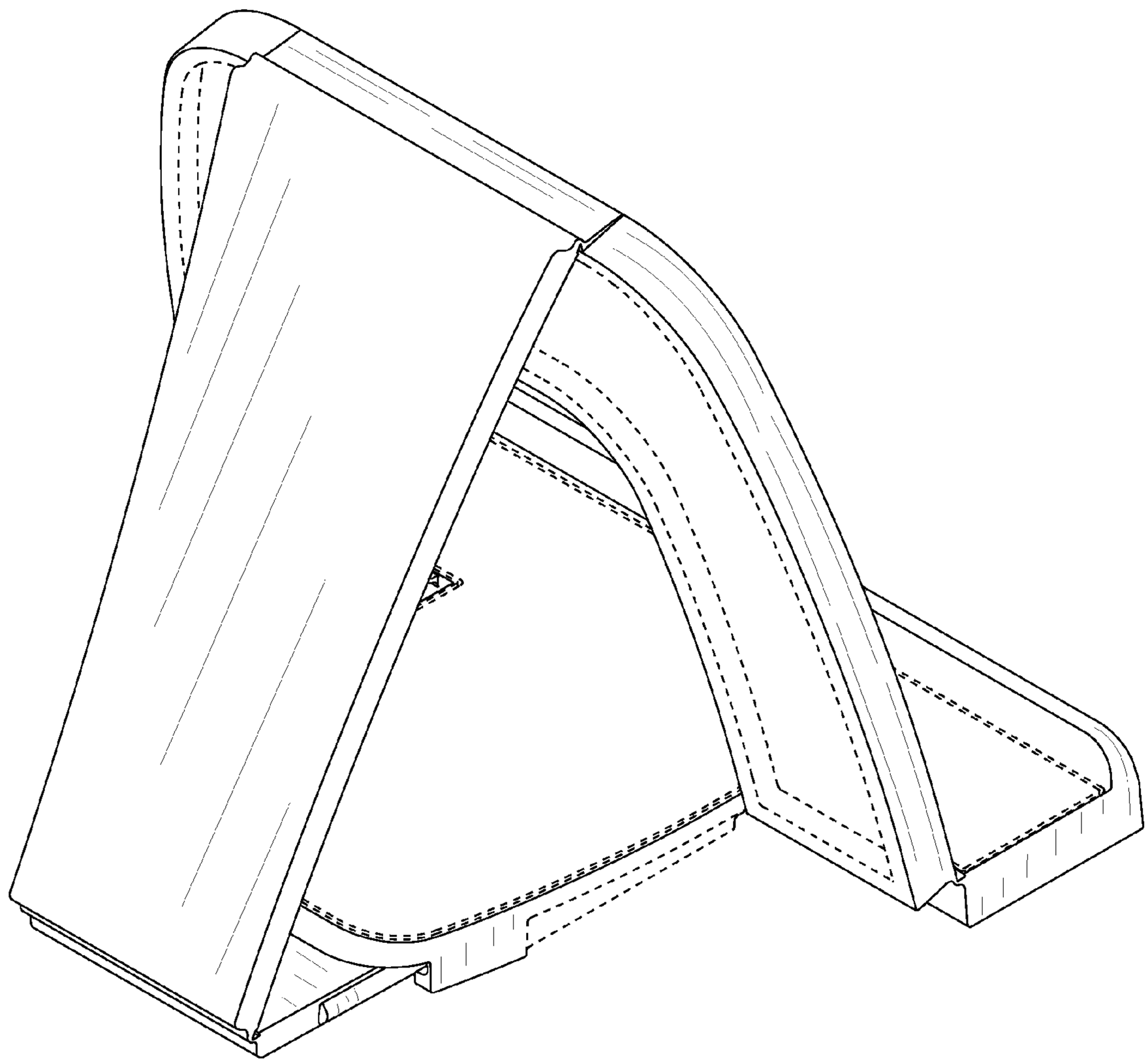

FIG. 2

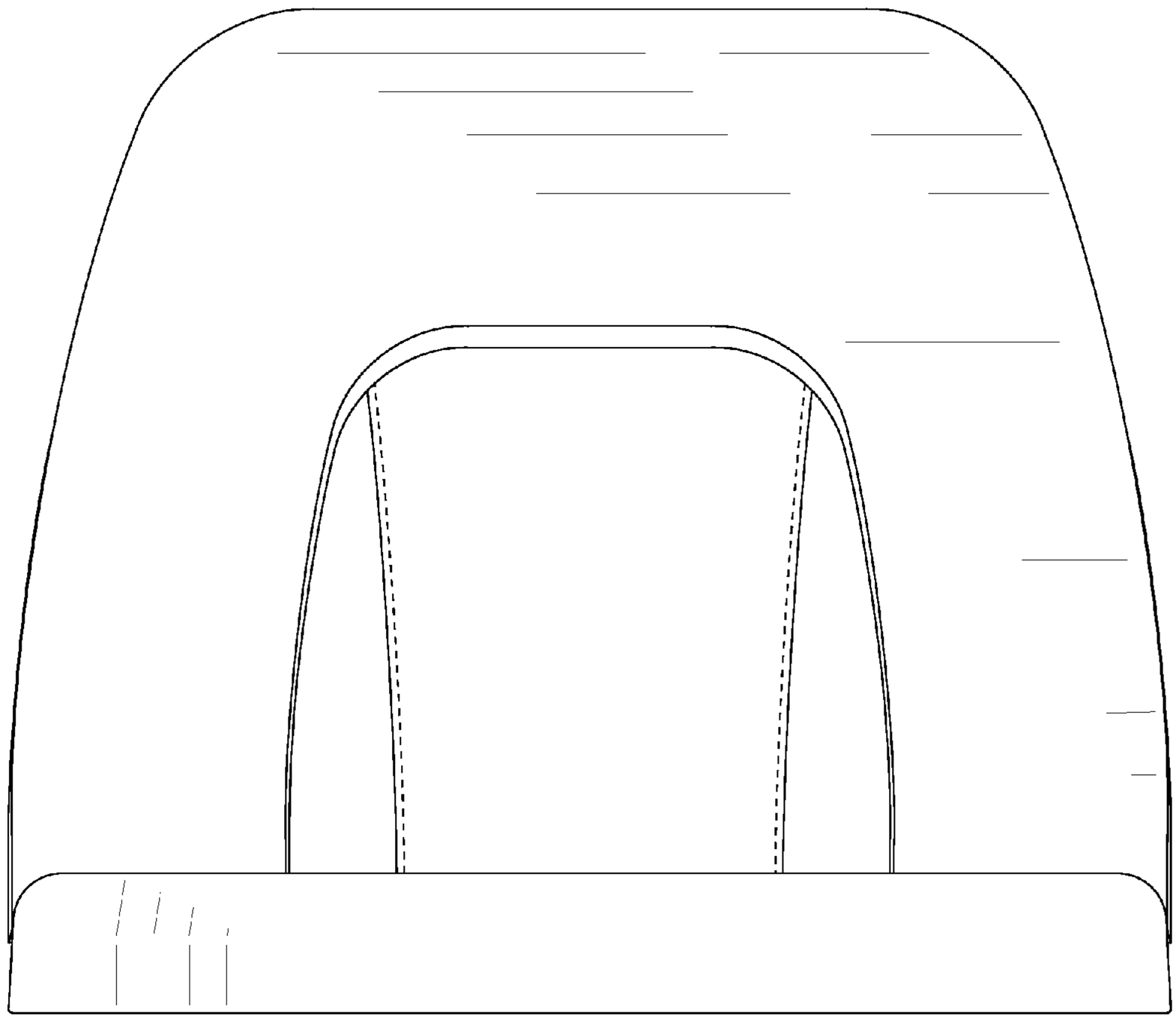

FIG. 3

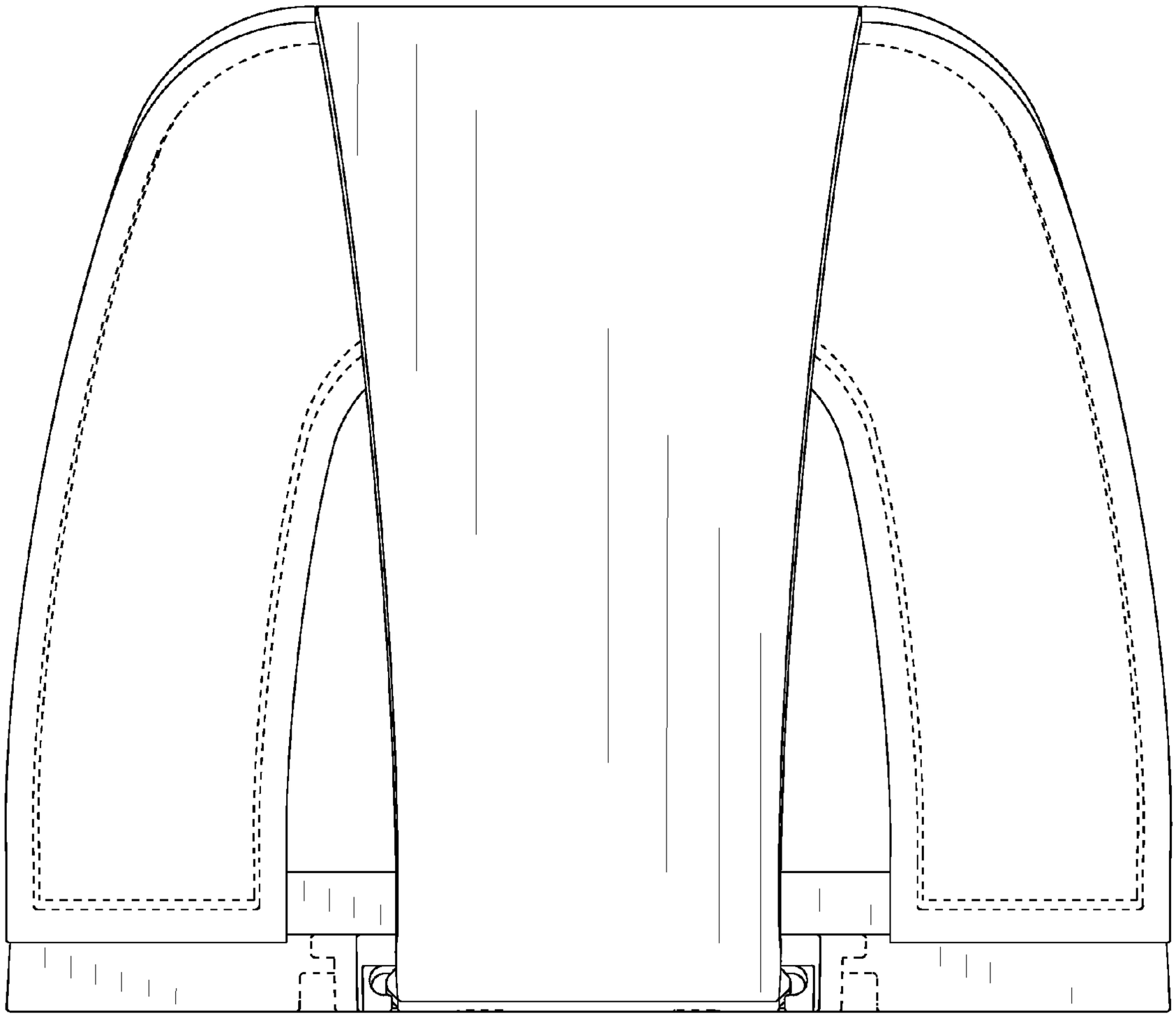

FIG. 4

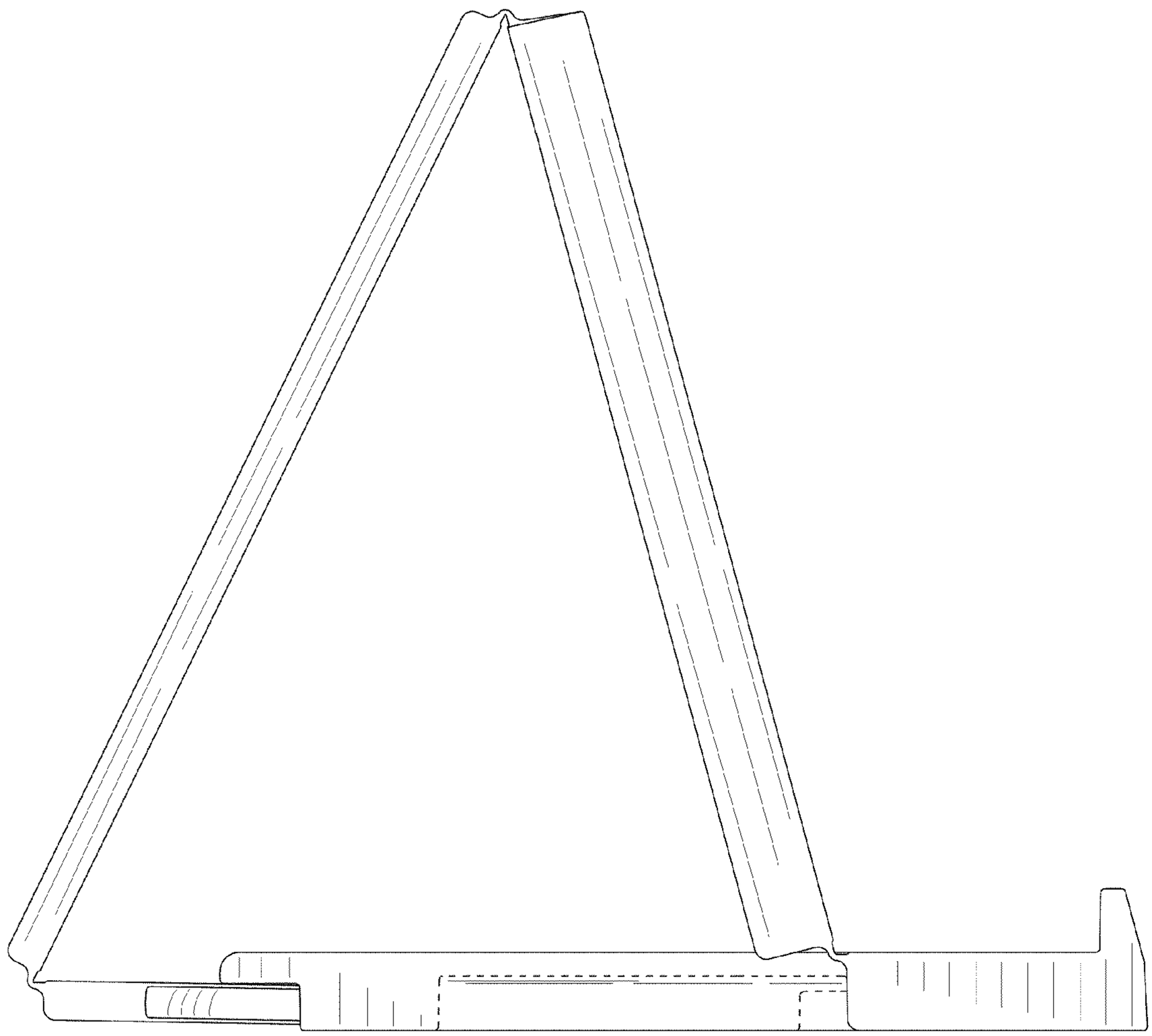

FIG. 5

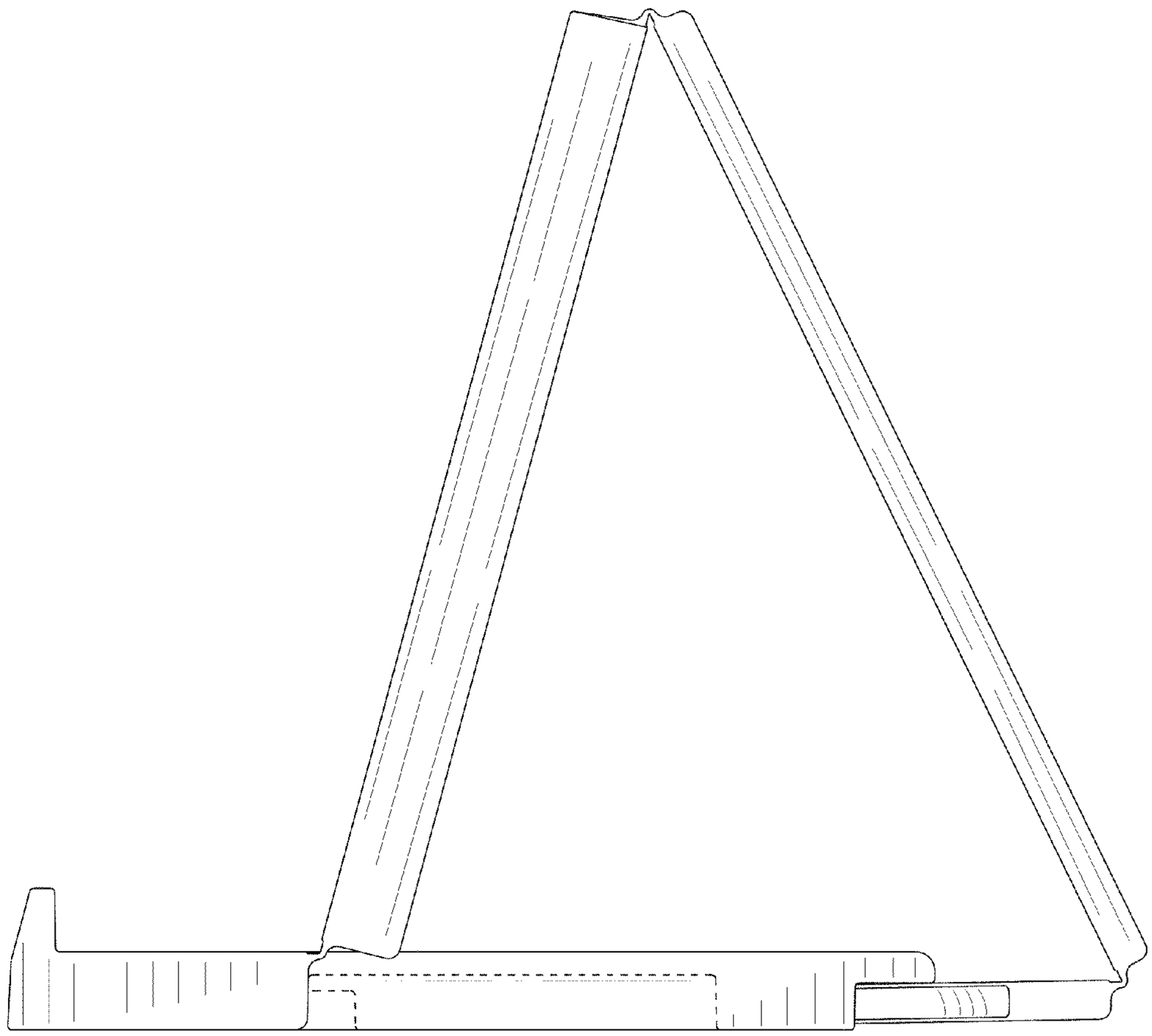

FIG. 6

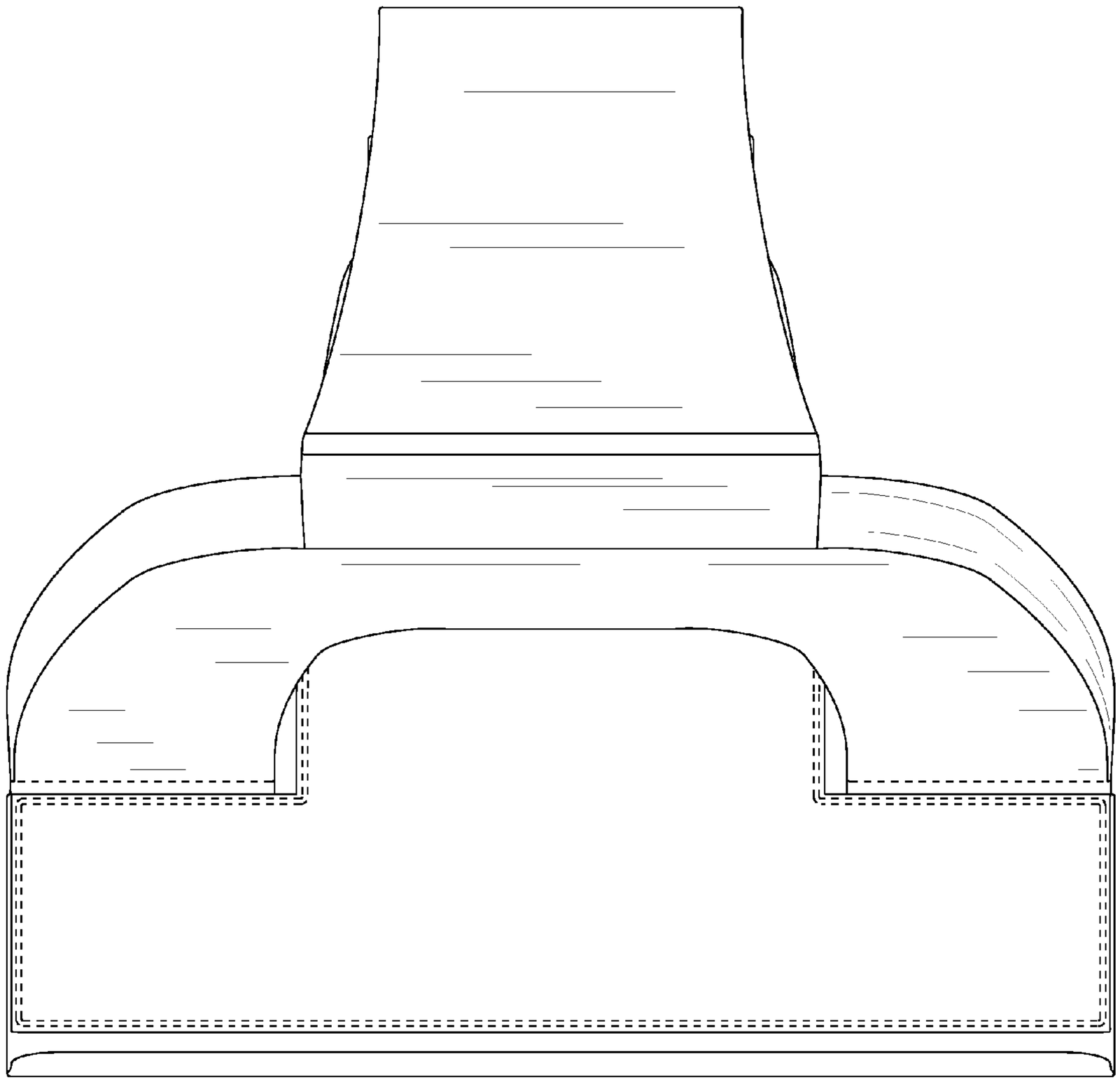

FIG. 7

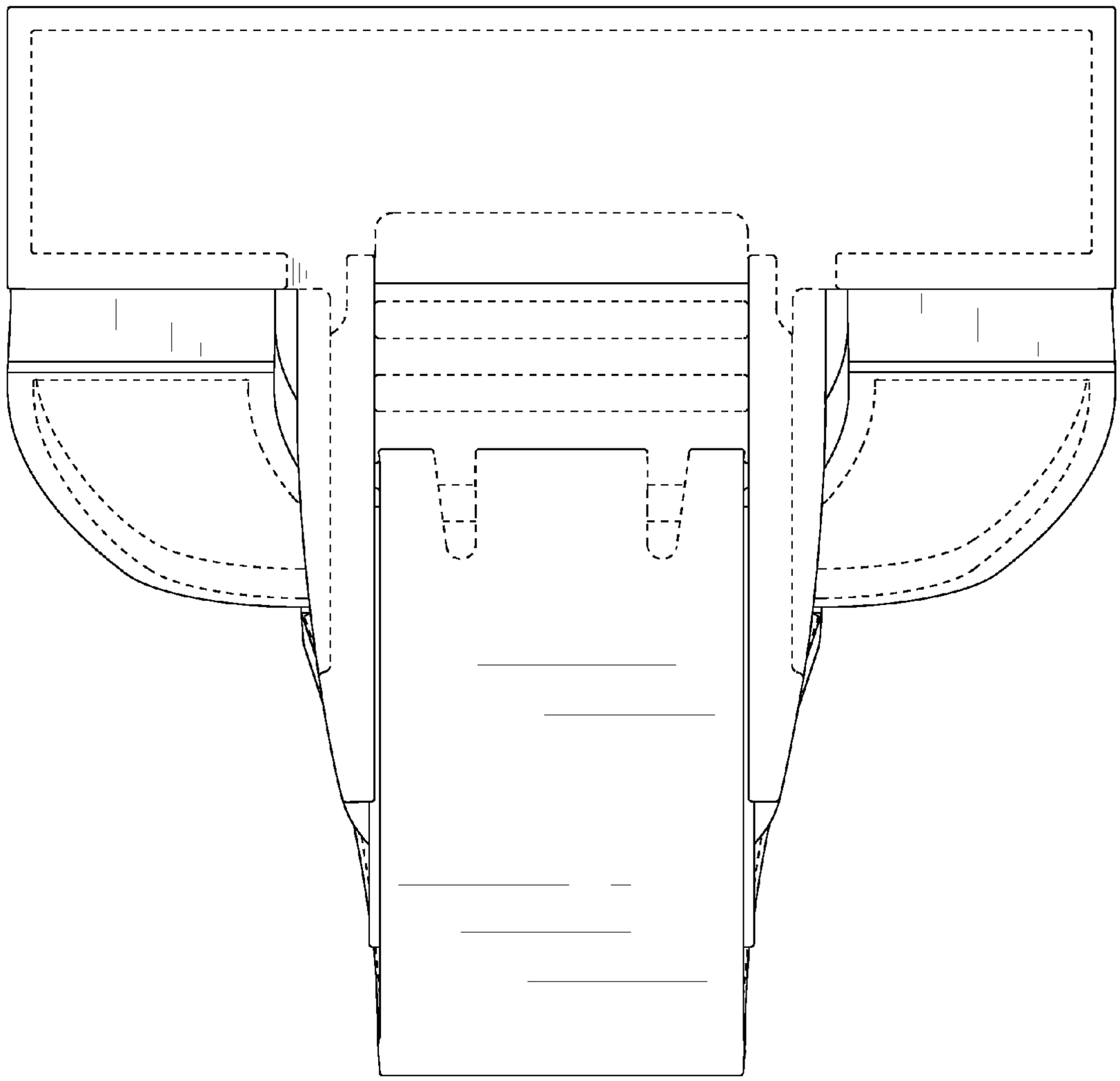

FIG. 8

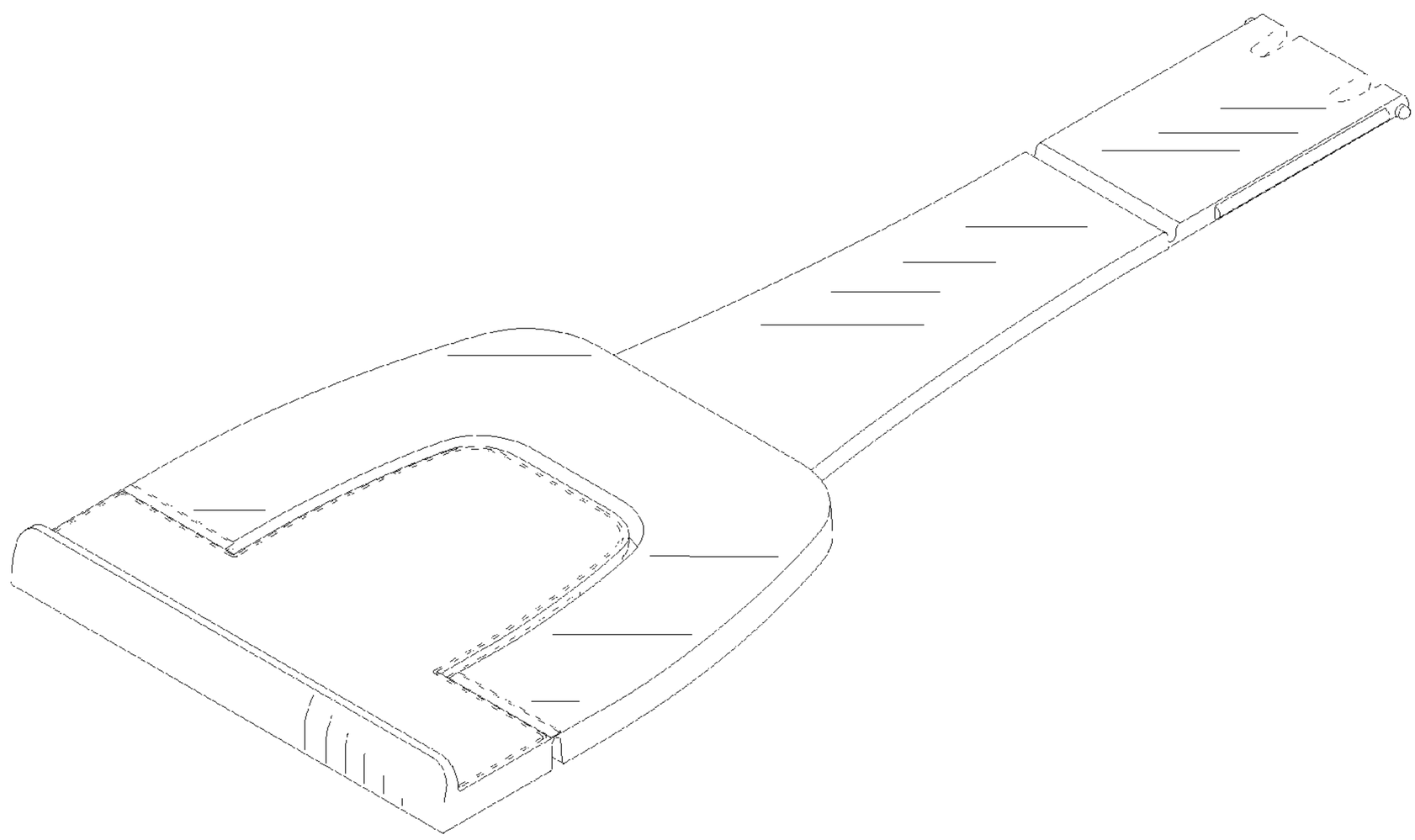

FIG. 9

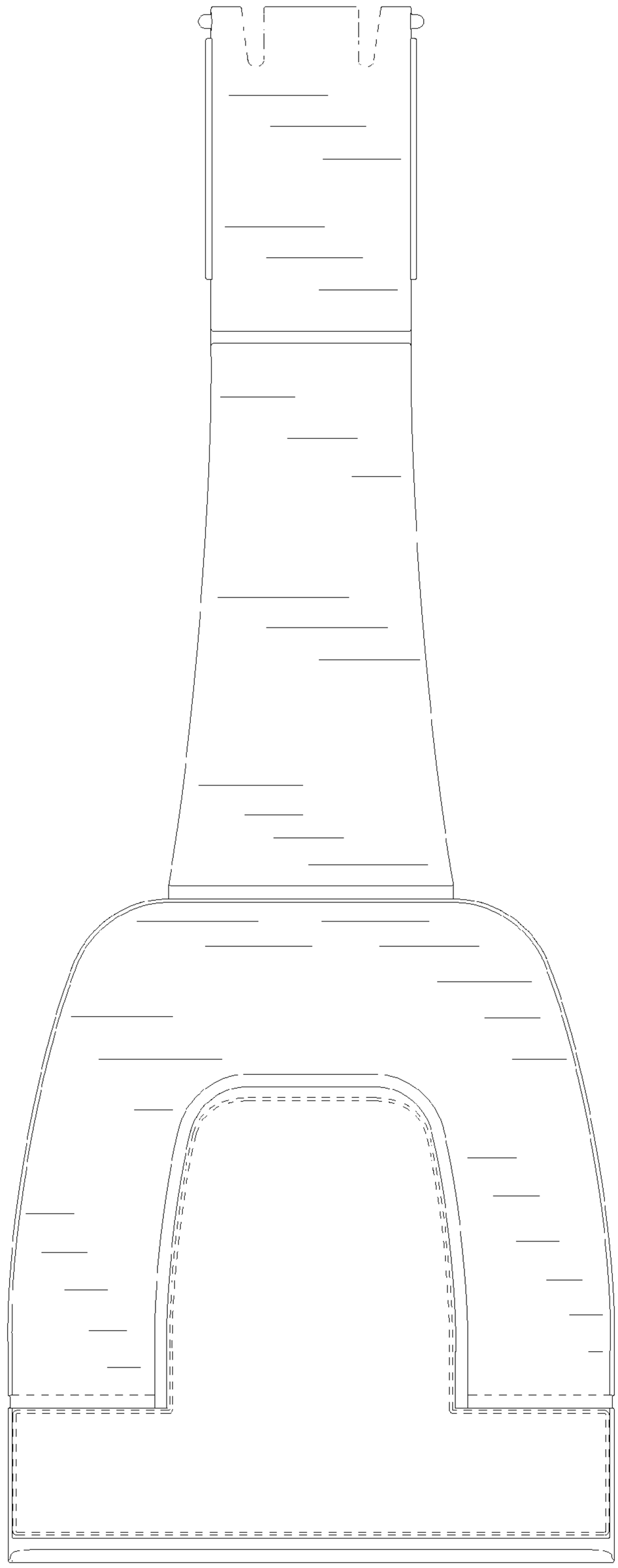

FIG. 10