US00D649172S

(12) United States Design Patent

Hösl et al.

(10) Patent No.: US D649,172 S
(45) Date of Patent: ** Nov. 22, 2011

(54) **CONTROL PANEL MOUNTED ON A SUPPORT ARM SYSTEM**

(75) Inventors: **Richard Hösl**, Nabburg (DE); **Rolf Zettwitz**, Forchheim (DE)

(73) Assignee: **Siemens Aktiengesellschaft**, Munich (DE)

(**) Term: **14 Years**

(21) Appl. No.: **29/376,281**

(22) Filed: **Oct. 5, 2010**

Related U.S. Application Data

(62) Division of application No. 29/334,494, filed on May 19, 2009, now Pat. No. Des. 631,899.

(30) **Foreign Application Priority Data**

Oct. 10, 2008 (EM) 001025753

(51) **LOC (9) Cl.** **15-09**

(52) **U.S. Cl.** **D15/122**

(58) **Field of Classification Search** D12/192; D13/162, 163, 164, 184; D14/371, 374, D14/375, 376, 377, 378; D15/122, 199; 116/334; 172/2, 3; 180/90, 324, 333; 248/122.1, 248/917–924; 318/568; 324/114, 115, 116, 324/131, 132, 156; 341/12; 345/104, 156, 345/168, 173, 901–905; 348/180, 184, 739; 349/1, 2, 11, 62; 364/424.07; 708/141

See application file for complete search history.

(56) **References Cited**

U.S. PATENT DOCUMENTS

D430,562	S	*	9/2000	Richards	D14/258
D432,533	S	*	10/2000	Jin	D14/336
6,140,812	A	*	10/2000	Russell et al.	324/156
D482,033	S	*	11/2003	Duan	D14/371
D513,254	S	*	12/2005	Chu et al.	D14/371
D529,026	S	*	9/2006	Yang	D14/371
D539,280	S	*	3/2007	Andresen	D14/335
D543,982	S	*	6/2007	Hasegawa et al.	D14/371
D598,397	S	*	8/2009	Reger et al.	D13/164
D599,855	S	*	9/2009	Soodeen et al.	D19/59
D631,042	S	*	1/2011	Chen	D14/337
D634,320	S	*	3/2011	Bliven et al.	D14/371

* cited by examiner

Primary Examiner — Patricia Palasik

(57) **CLAIM**

We claim the ornamental design for a control panel mounted on a support arm system, as shown and described.

DESCRIPTION

FIG. **1** is a front view of a control panel mounted on a support arm system;
FIG. **2** is a back view of the control panel mounted on a support arm system;
FIG. **3** is a view from the left side of the control panel mounted on a support arm system;
FIG. **4** is a view from the right side of the control panel mounted on a support arm system;
FIG. **5** is a view from the above of the control panel mounted on a support arm system;
FIG. **6** is a view from the below of the control panel mounted on a support arm system;
FIG. **7** is a first perspective view of the control panel mounted on a support arm system; and,
FIG. **8** is a second perspective view of the control panel mounted on a support arm system.

1 Claim, 8 Drawing Sheets

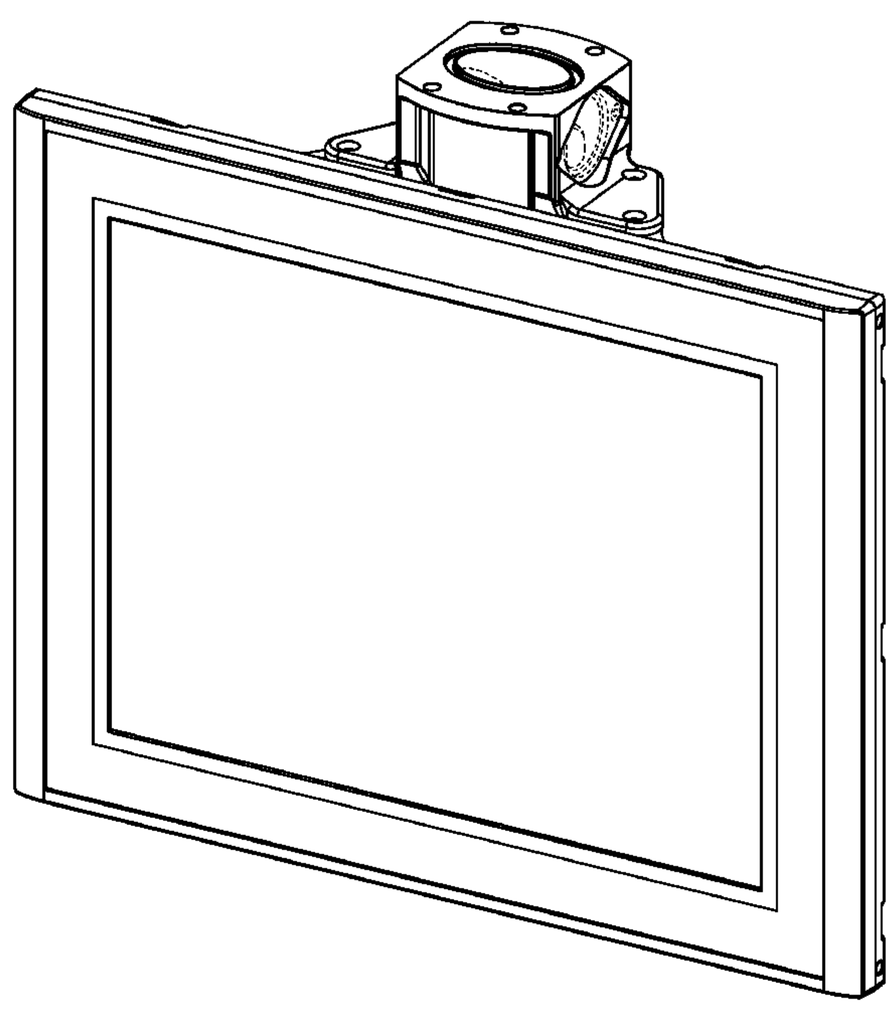

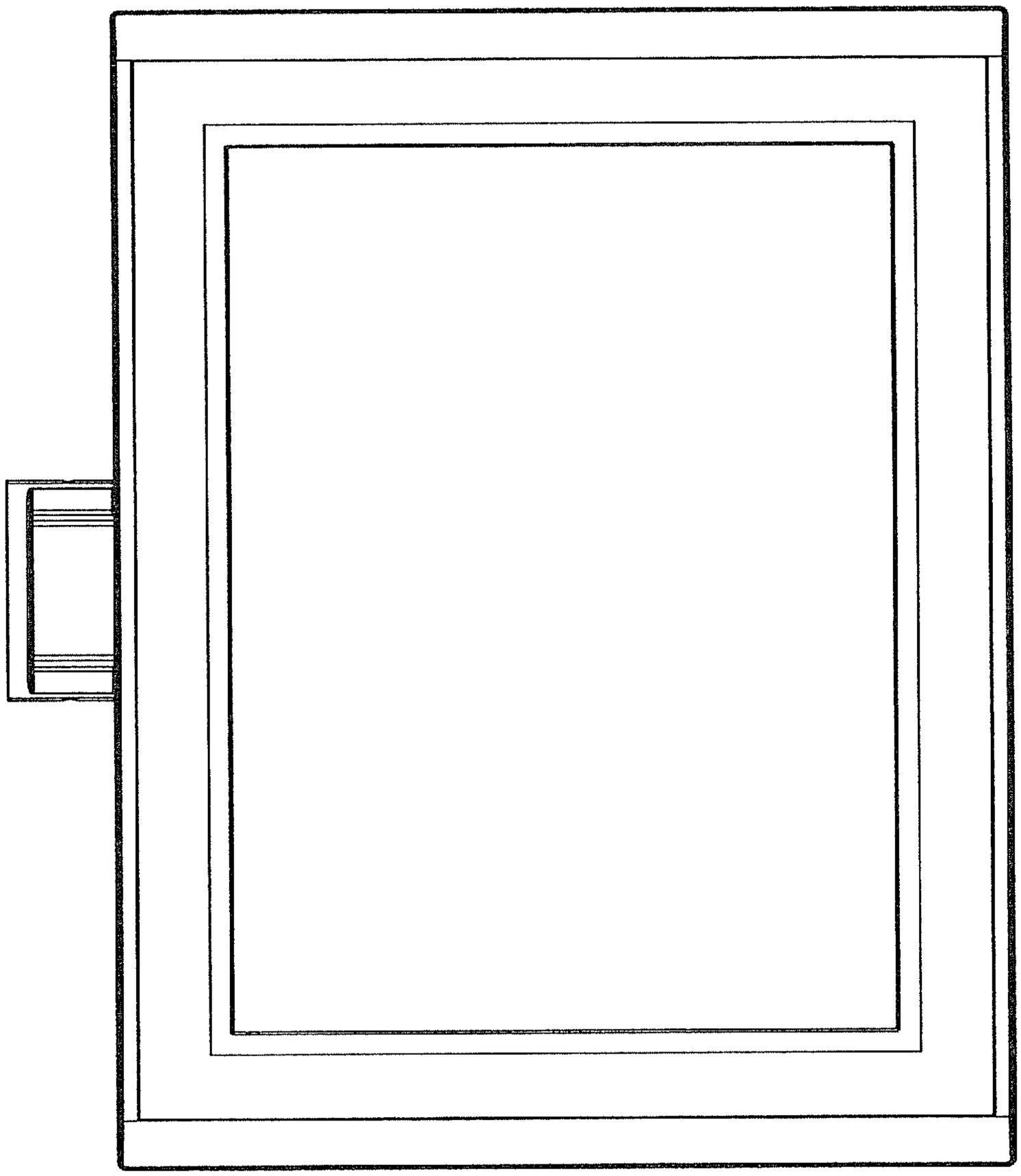

FIG 1

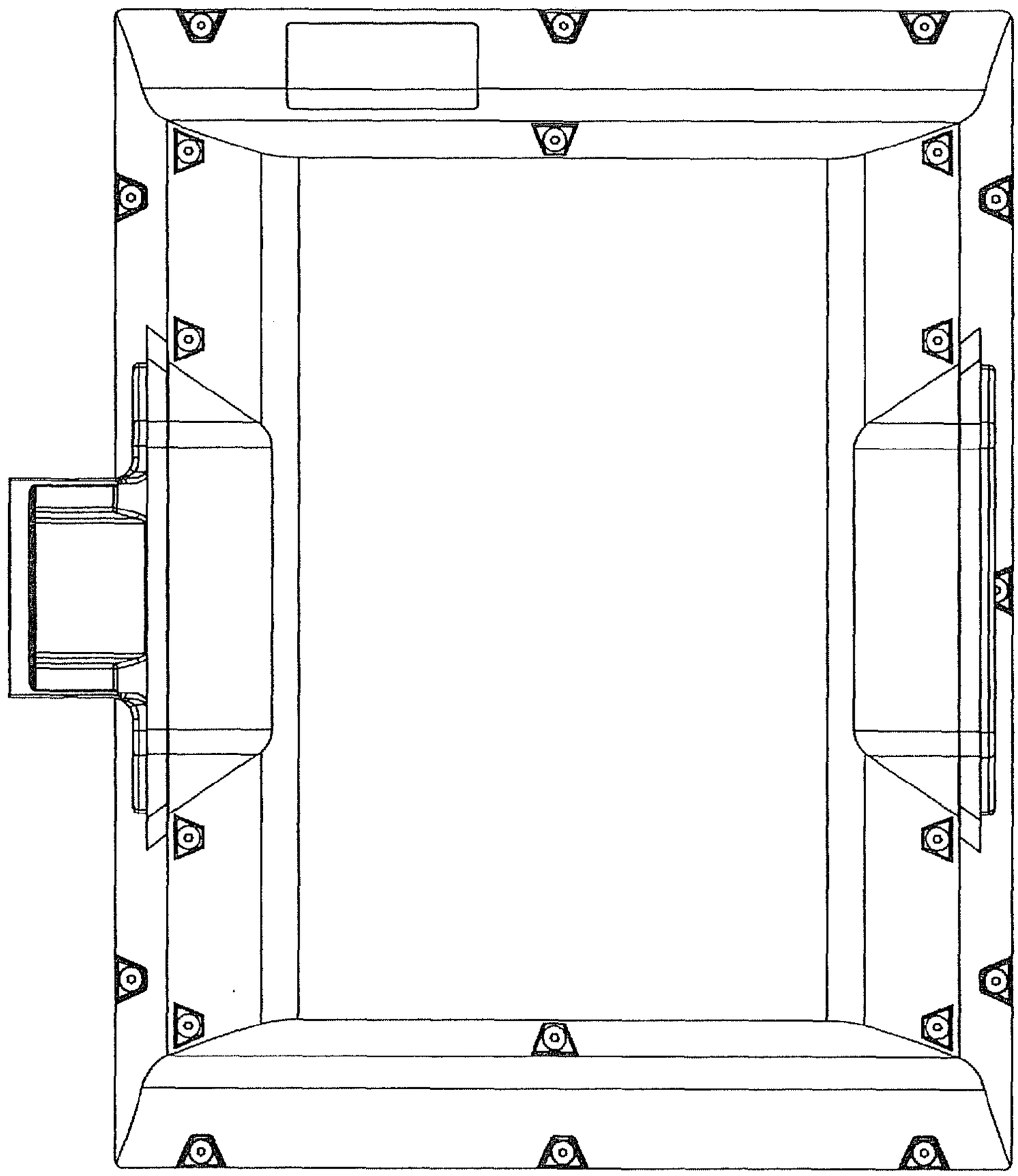

FIG 2

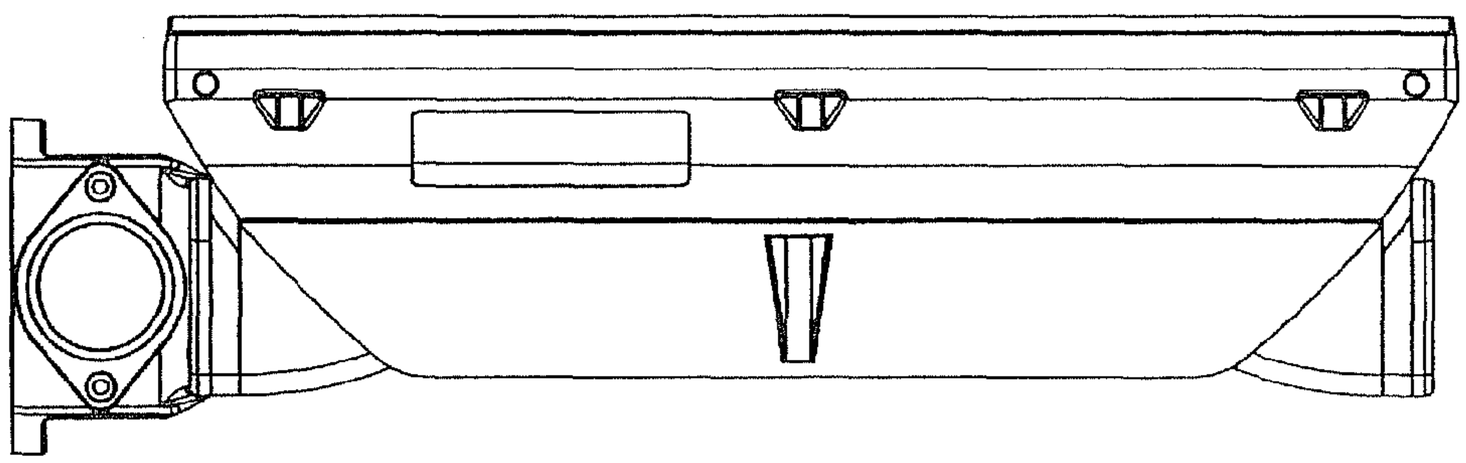

FIG 3

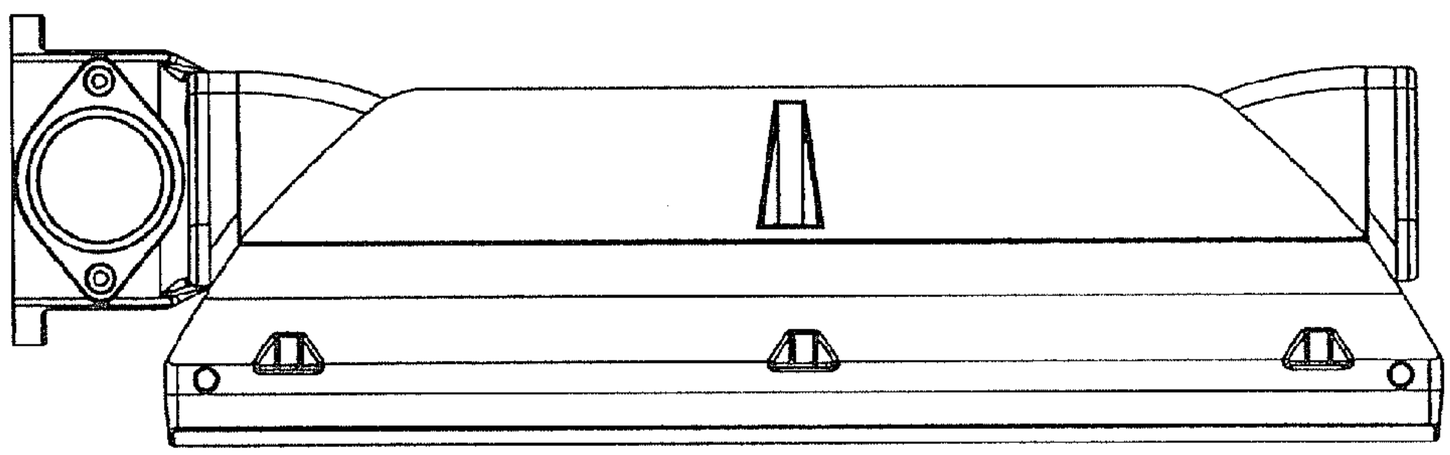

FIG 4

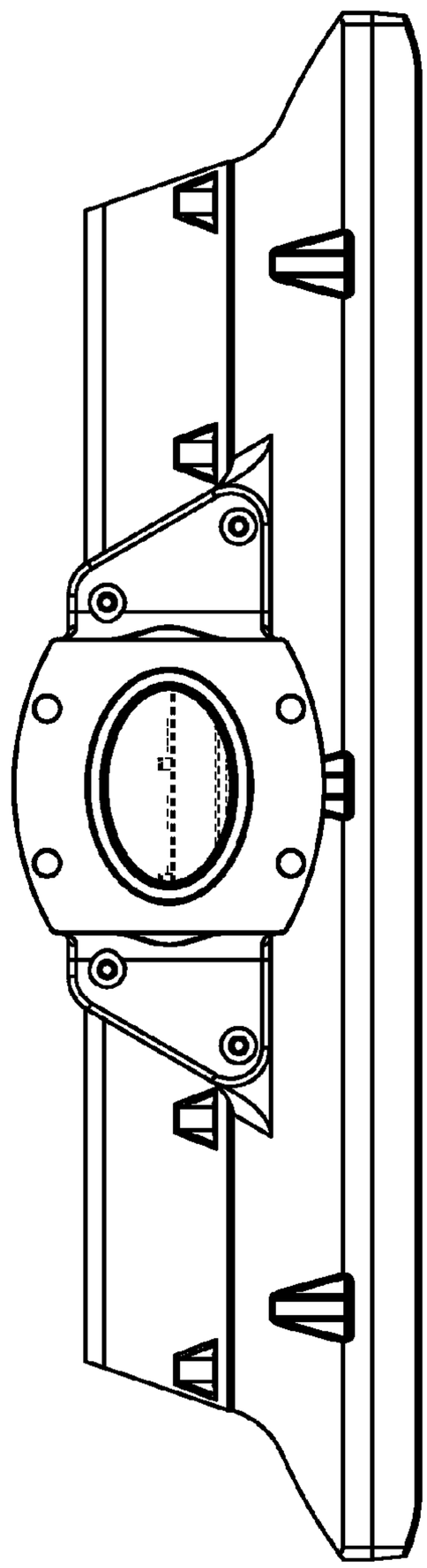

FIG 5

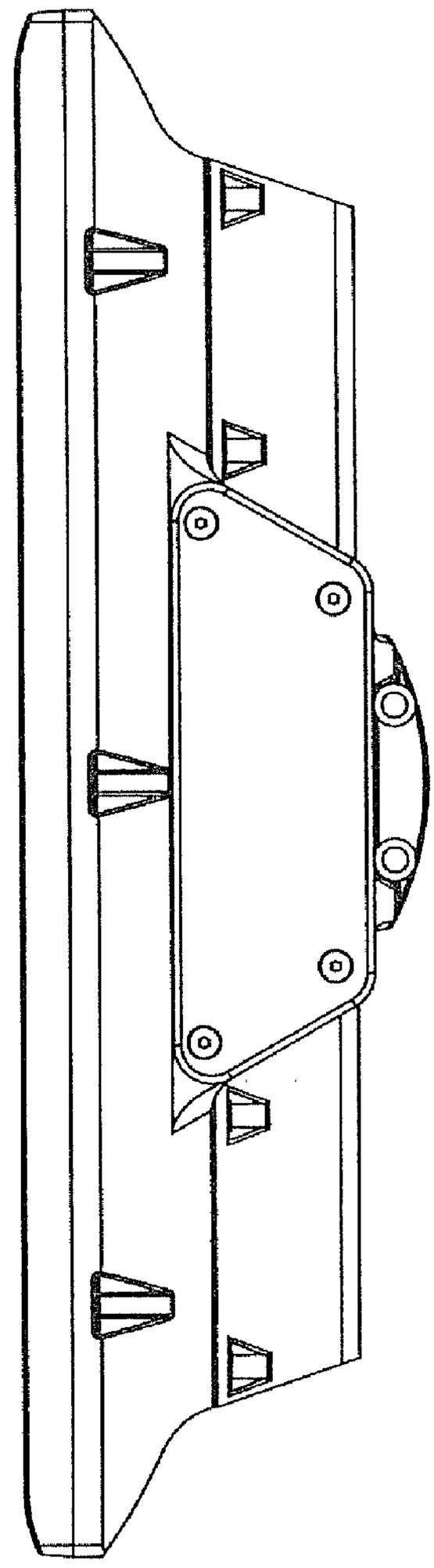

FIG 6

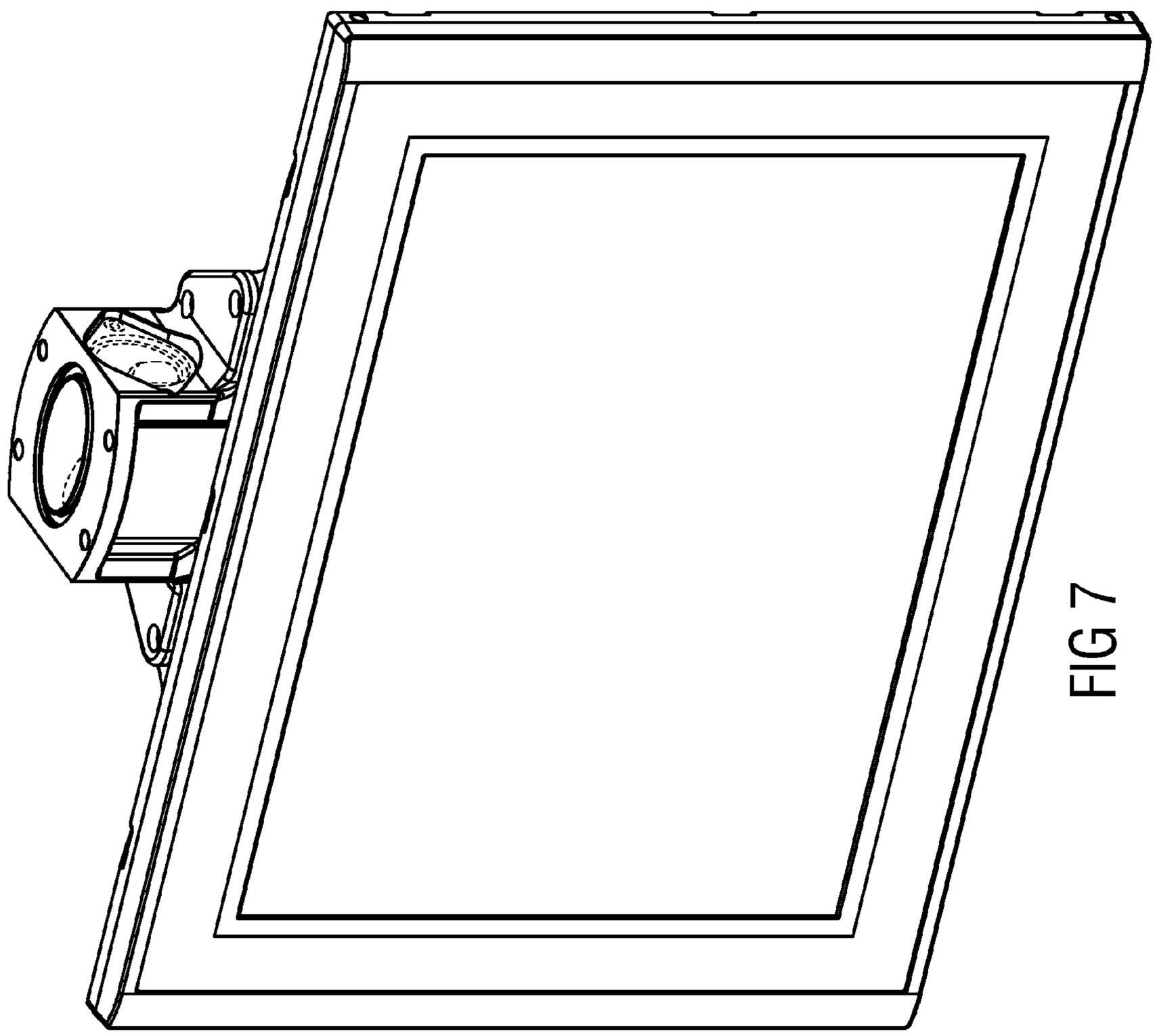

FIG 7

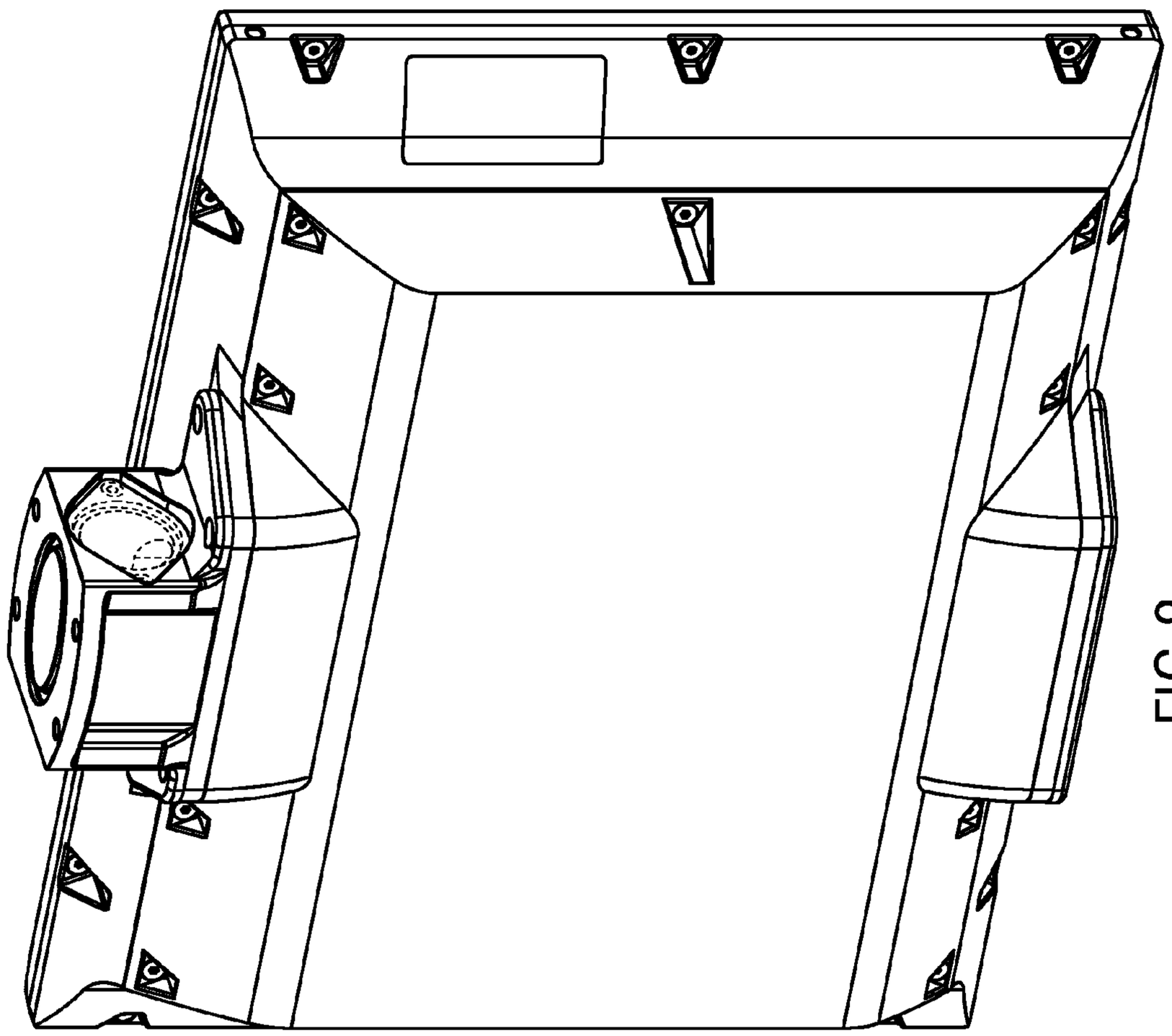

FIG 8