US00D649147S

(12) United States Design Patent

Siegel et al.

(10) Patent No.: US D649,147 S
(45) Date of Patent: ** Nov. 22, 2011

(54) **AUDIO COMPONENT FRONT FACE**

(75) Inventors: **Robert Siegel**, Niles, MI (US); **Jorge Silva**, Osceola, IN (US); **Brian Pickowitz**, Granger, IN (US); **Greg Trim**, Granger, IN (US); **Joseph Fischer**, Goshen, IN (US)

(73) Assignee: **Harman International Industries, Incorporated**, Northridge, CA (US)

(**) Term: **14 Years**

(21) Appl. No.: **29/383,927**

(22) Filed: **Jan. 24, 2011**

(51) **LOC (9) Cl.** **14-01**

(52) **U.S. Cl.** **D14/257**

(58) **Field of Classification Search** D14/496, D14/498–505, 137, 157, 168, 188, 197–198, D14/240, 257–258; 360/99.02, 99.07; 369/75.11, 369/75.21, 77.11, 77.21; 720/601, 612, 619, 720/647, 649, 655; 455/344, 347–351
See application file for complete search history.

(56) **References Cited**

U.S. PATENT DOCUMENTS

D498,233	S	*	11/2004	Kellom et al.	D14/257
D558,195	S	*	12/2007	Divine et al.	D14/257
D573,592	S	*	7/2008	Divine et al.	D14/257
D584,723	S	*	1/2009	Growcock et al.	D14/257

* cited by examiner

Primary Examiner — Nanda Bondade
(74) *Attorney, Agent, or Firm* — Plumsea Law Group, LLC

(57) **CLAIM**

The ornamental design for an audio component front face, as shown and described.

DESCRIPTION

FIG. **1** is a perspective view of an audio component front face showing our new design;
FIG. **2** is a front elevational view thereof;
FIG. **3** is a top plan view thereof;
FIG. **4** is a bottom plan view thereof;
FIG. **5** is a side elevational view of one side thereof, the opposite side elevational view being a mirror image; and,
FIG. **6** is a rear elevational view thereof.
The broken line showings of the mounting holes in the corners of the front face as well as the rear surface form no part of the claimed design.

1 Claim, 4 Drawing Sheets

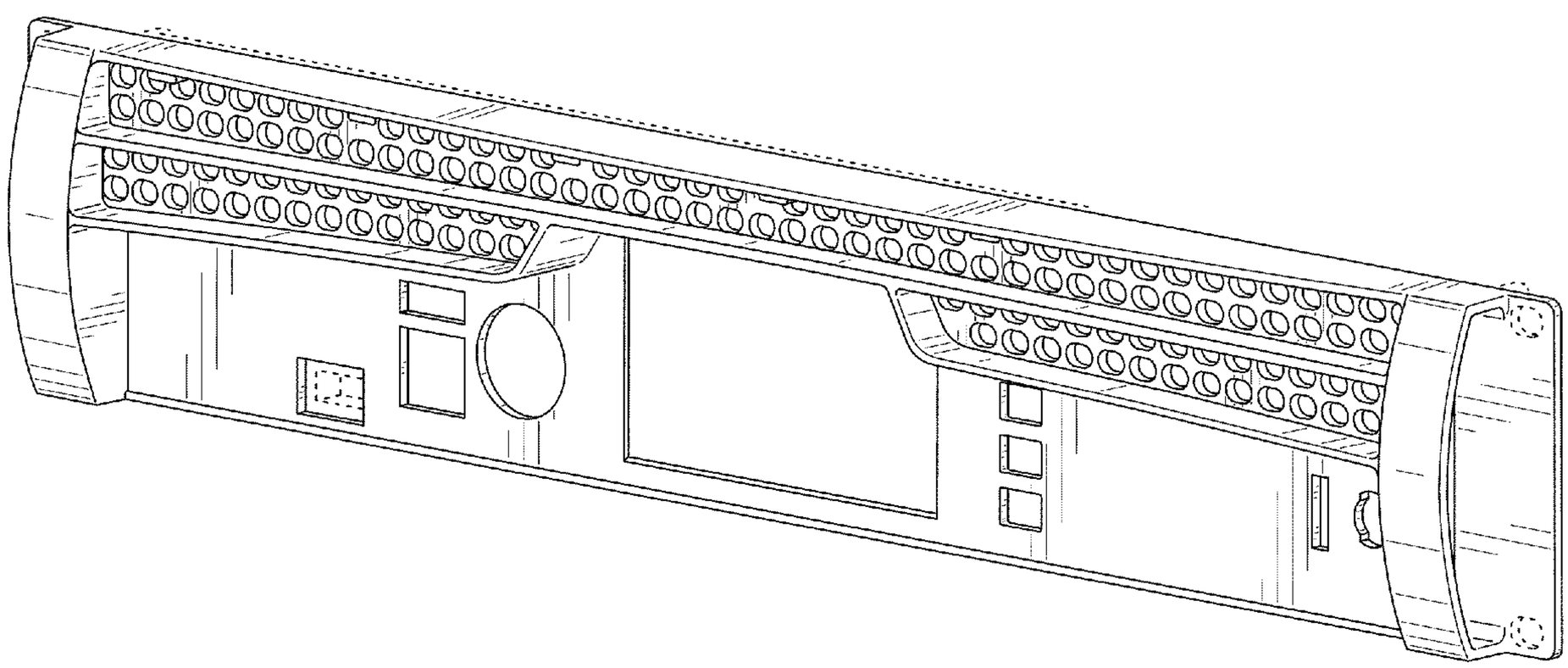

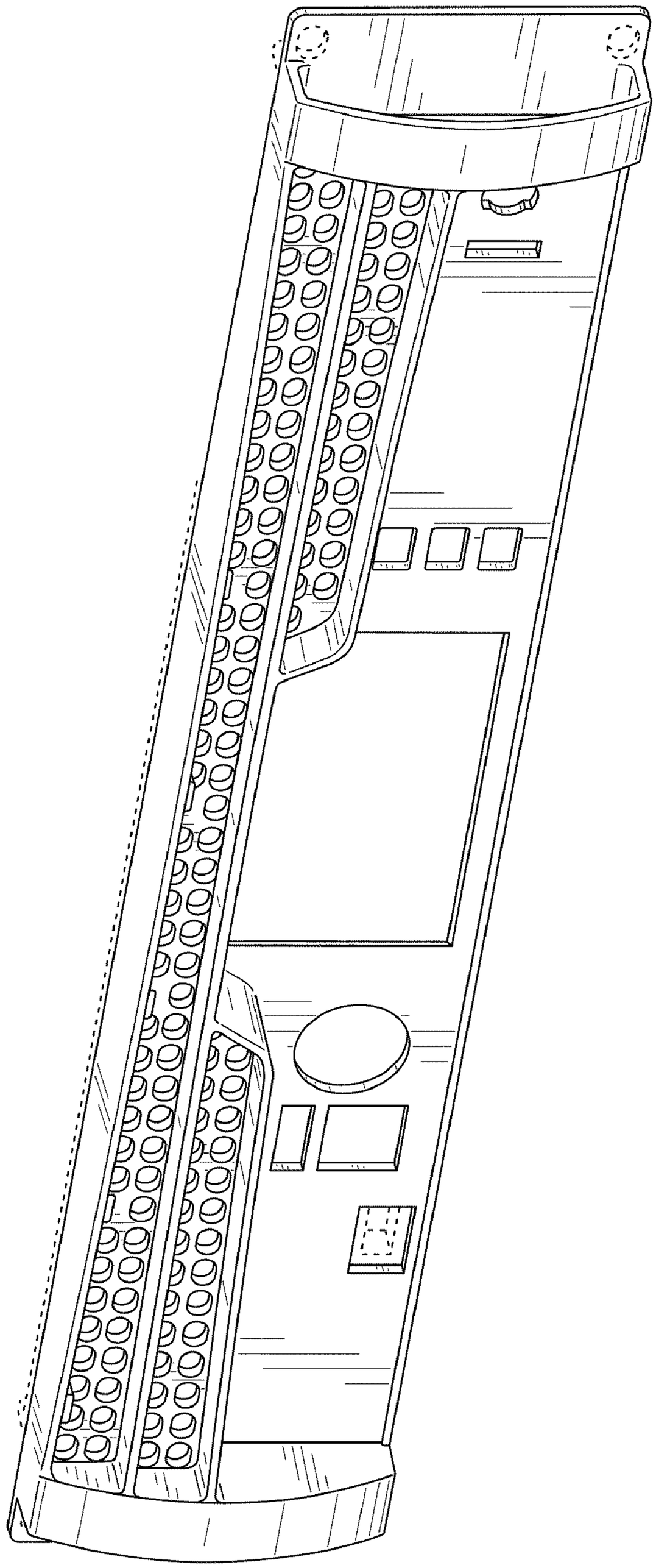

Fig. 1

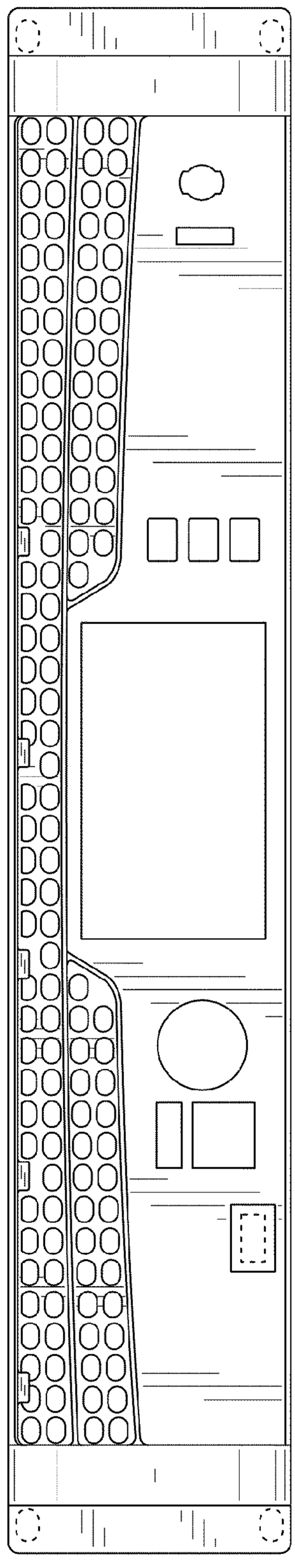

Fig. 2

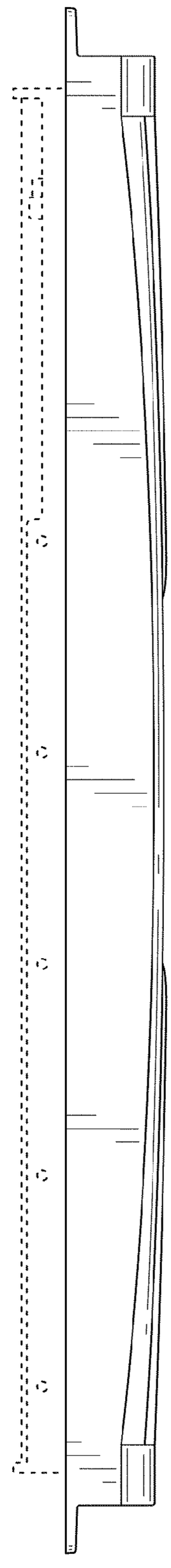

Fig. 3

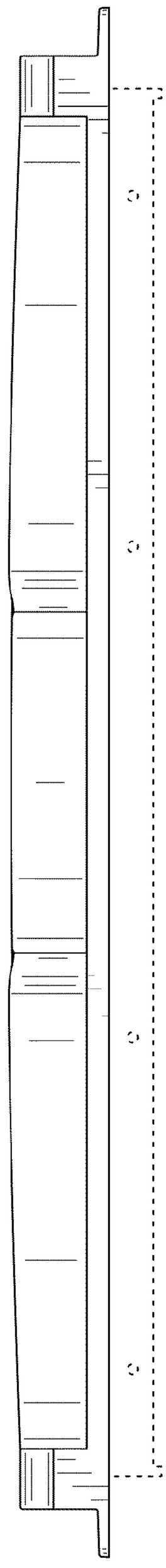

Fig. 4

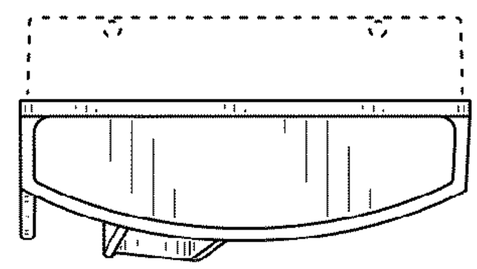

Fig. 5

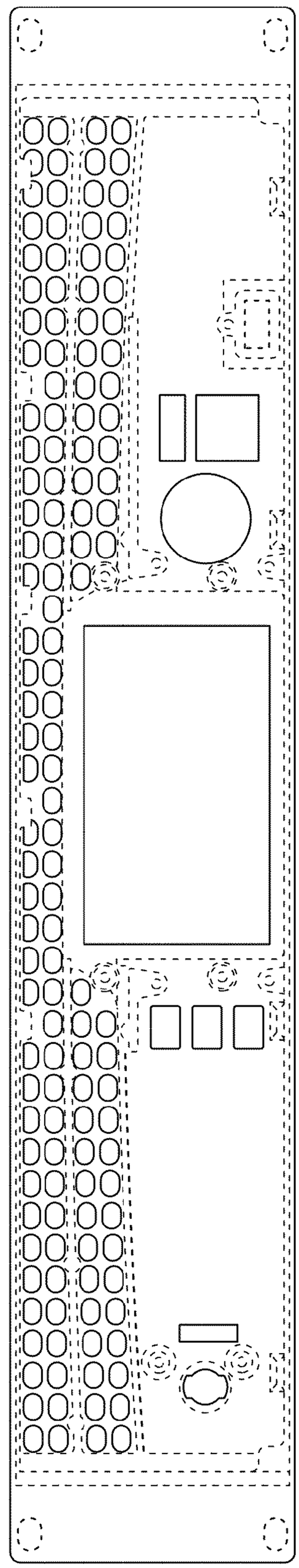

Fig. 6