US00D648044S

(12) United States Design Patent

Kim et al.

(10) Patent No.: US D648,044 S
(45) Date of Patent: ** Nov. 1, 2011

(54) **PORTION OF A LED LAMP**

(75) Inventors: **Jihoo Kim**, Seoul (KR); **Tae Young Choi**, Seoul (KR); **Dong Nyung Lim**, Seoul (KR); **Sung Ho Kim**, Seoul (KR); **Cheonjoo Kim**, Seoul (KR)

(73) Assignee: **LG Innotek Co., Ltd.**, Seoul (KR)

(**) Term: **14 Years**

(21) Appl. No.: **29/389,810**

(22) Filed: **Apr. 18, 2011**

(30) **Foreign Application Priority Data**

Oct. 22, 2010 (KR) 30-2010-0045769

(51) **LOC (9) Cl.** **26-04**

(52) **U.S. Cl.** **D26/2**

(58) **Field of Classification Search** D26/1–4; 313/313, 315, 316, 317, 318, 493; 315/52, 315/53, 56, 57, 58

See application file for complete search history.

(56) **References Cited**

U.S. PATENT DOCUMENTS

D553,267	S	*	10/2007	Yuen	D26/2
D590,523	S	*	4/2009	Takahashi	D26/2
D600,368	S	*	9/2009	Bertram et al.	D26/2
D605,786	S	*	12/2009	Lim	D26/2
D617,475	S	*	6/2010	Hiraga et al.	D26/2
D623,774	S	*	9/2010	Tsai	D26/2
D628,321	S	*	11/2010	Yoshinobu et al.	D26/2

* cited by examiner

Primary Examiner — Marcus Jackson
(74) *Attorney, Agent, or Firm* — Lowe Hauptman Ham & Berner LLP

(57) **CLAIM**

The ornamental design for a portion of a LED lamp, as shown and described.

DESCRIPTION

FIG. **1** is a perspective view of a portion of a LED lamp showing my/our new design;
FIG. **2** is a front elevational view thereof;
FIG. **3** is a rear elevational view thereof;
FIG. **4** is a left side elevational view thereof;
FIG. **5** is a right side elevational view thereof;
FIG. **6** is a top plan view thereof; and,
FIG. **7** is a bottom plan view thereof.
LED is installed in the light emitting part.

1 Claim, 4 Drawing Sheets

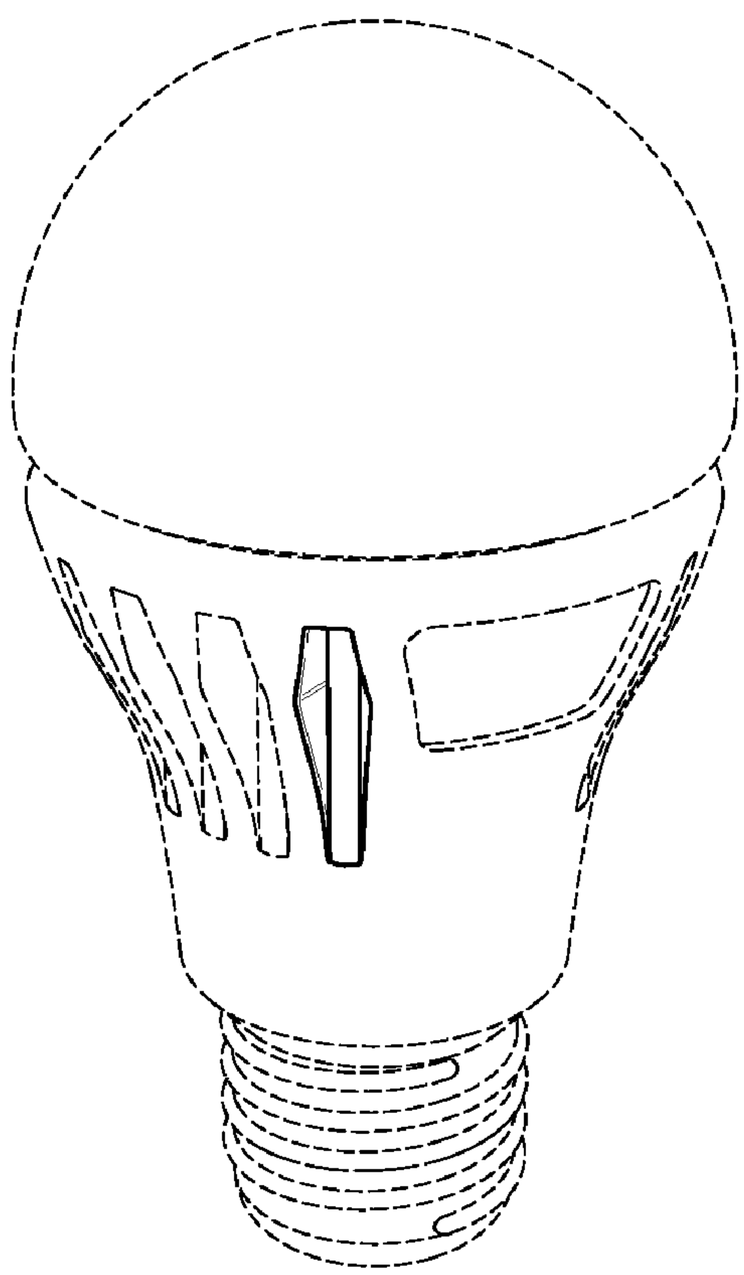

FIG. 1

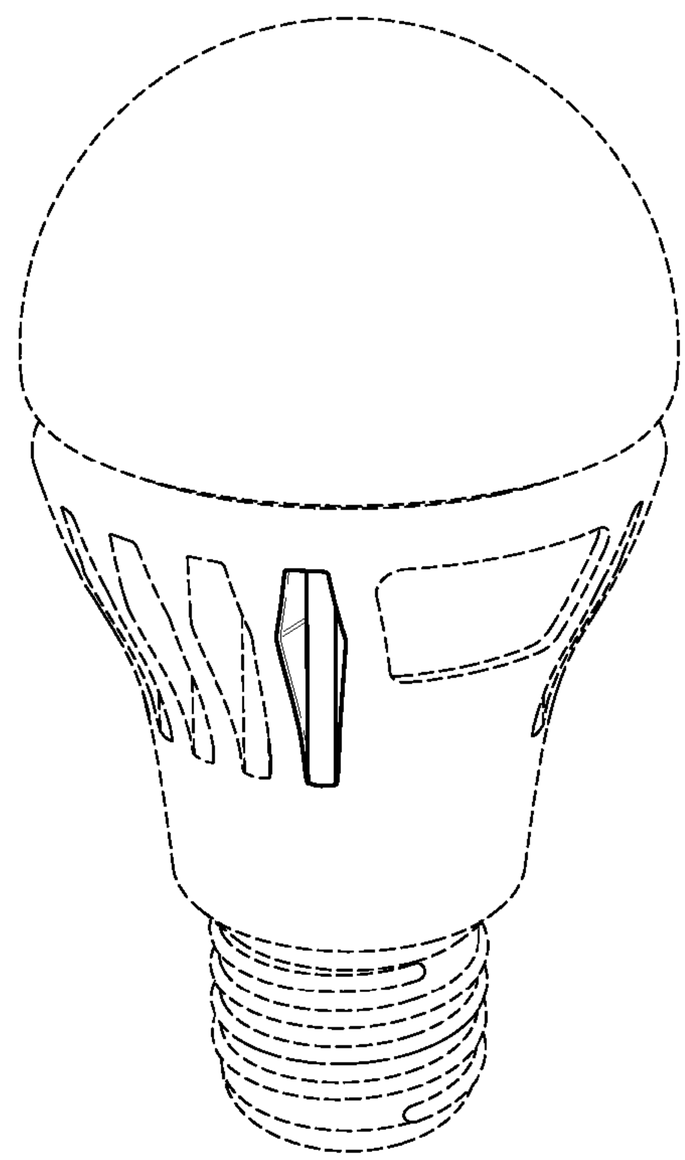

FIG. 2

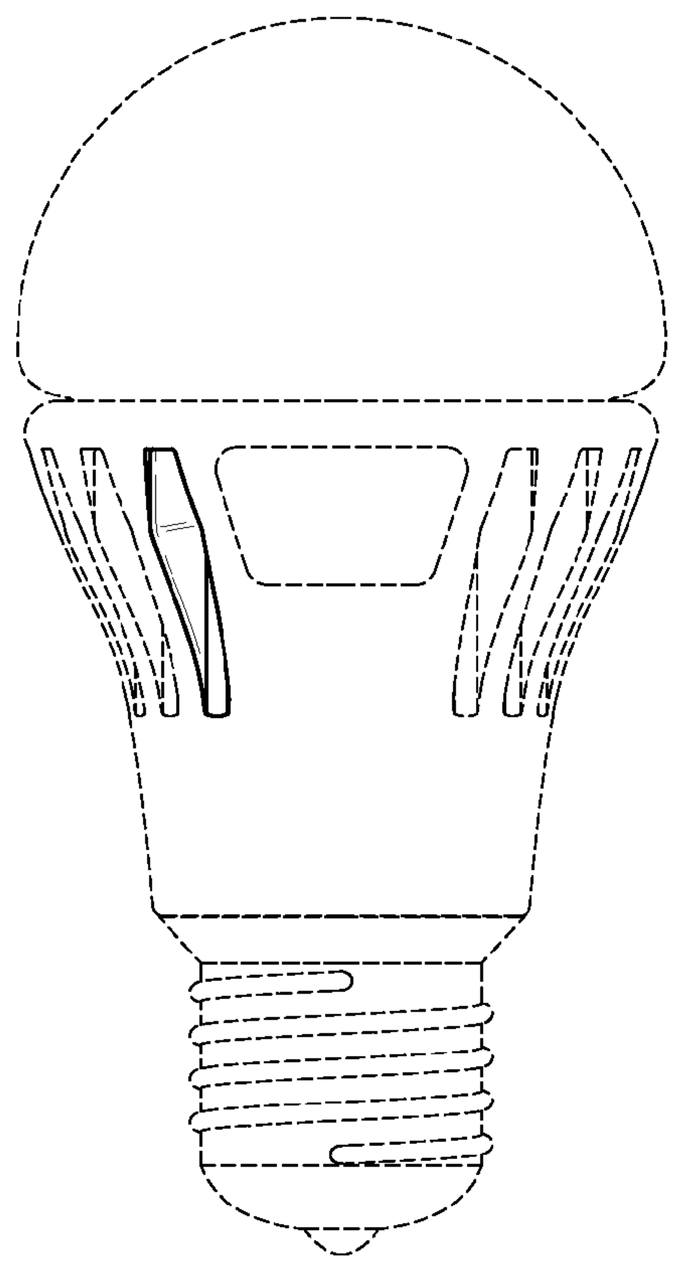

FIG. 3

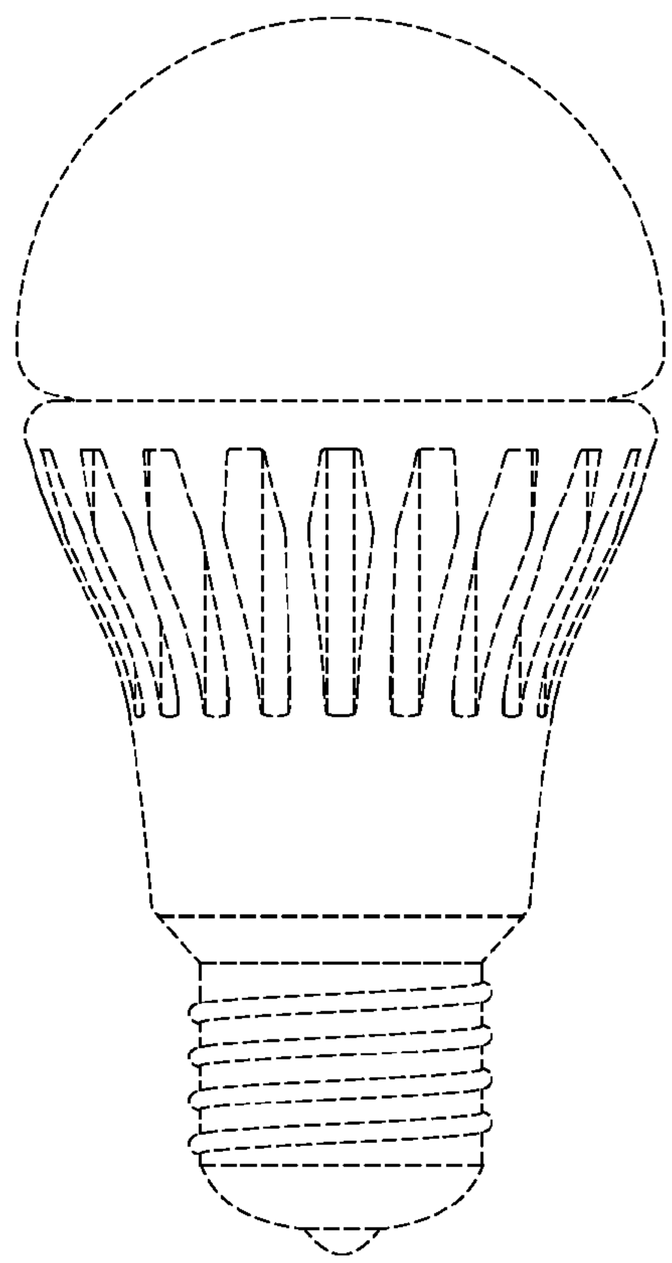

FIG. 4

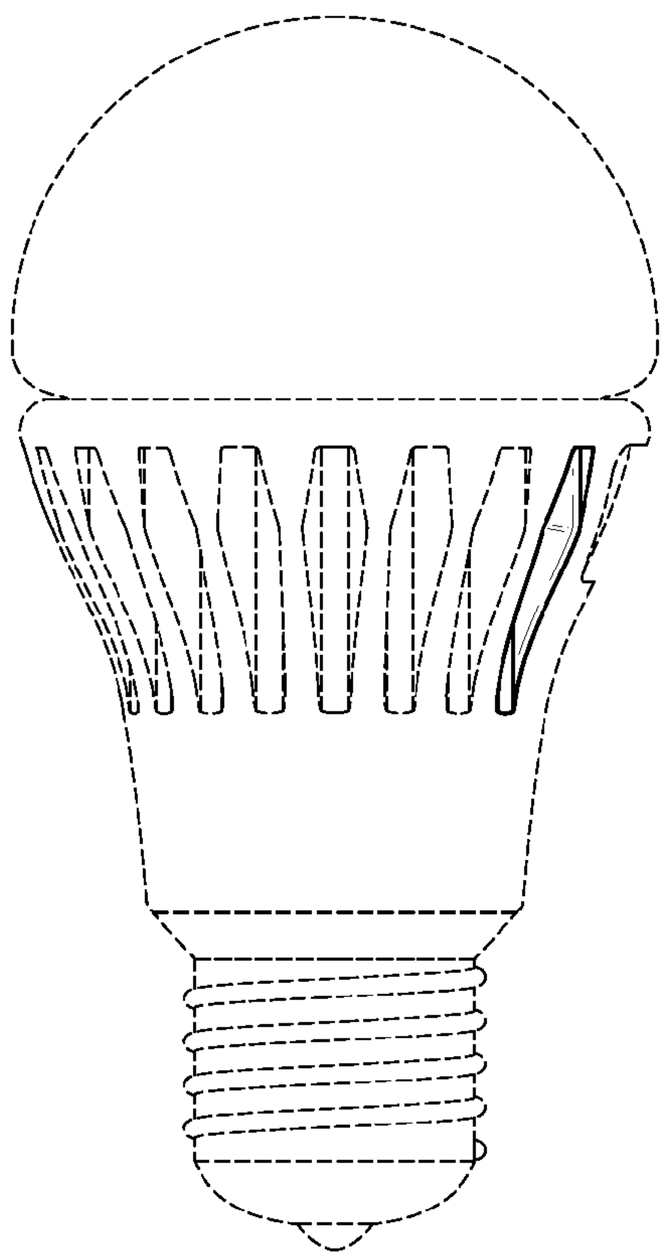

FIG. 5

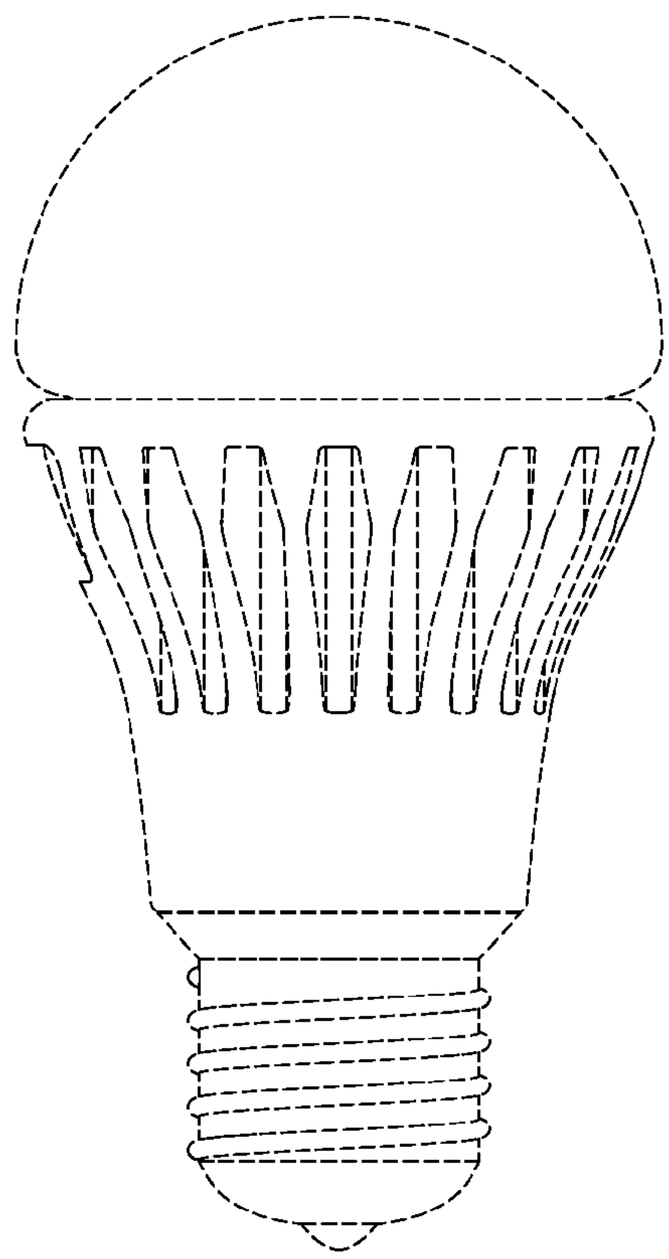

FIG. 6

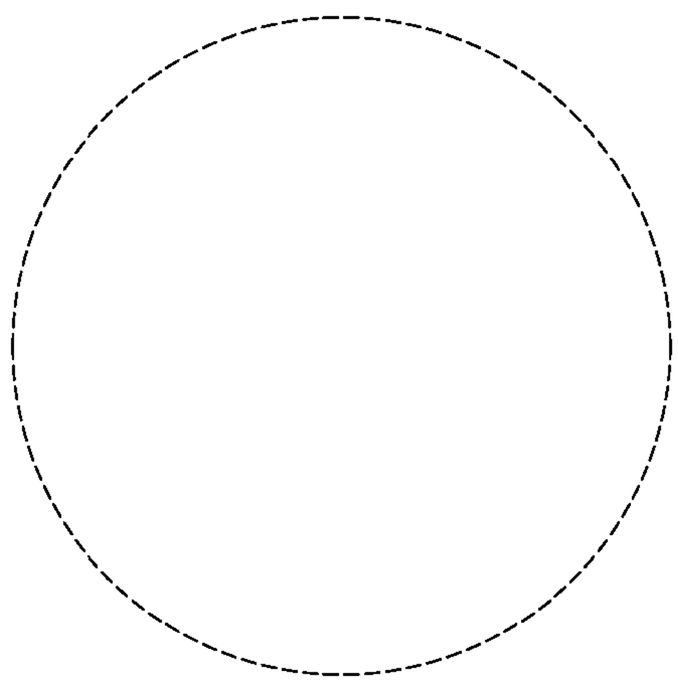
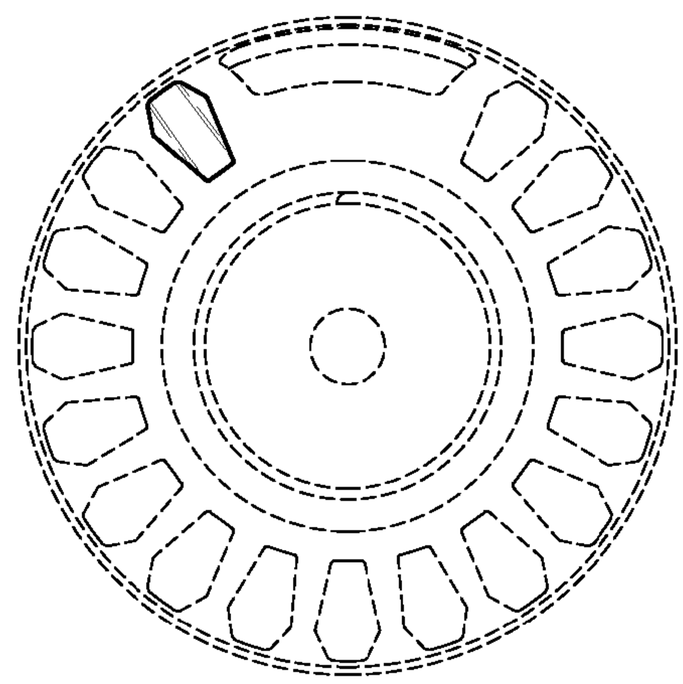
FIG. 7