US00D647201S

(12) United States Design Patent
Gauthier et al.

(10) Patent No.: US D647,201 S
(45) Date of Patent: ** Oct. 18, 2011

(54) **TOOL**

(75) Inventors: **Michael T. Gauthier**, Grafton, WI (US); **Robert F. Miller**, Grafton, WI (US); **Robert Bast**, Sheboygan Falls, WI (US); **Austin R. S. Braganza**, Milwaukee, WI (US)

(73) Assignee: **Gauthier Biomedical Inc.**, Grafton, WI (US)

(**) Term: **14 Years**

(21) Appl. No.: **29/376,223**

(22) Filed: **Oct. 4, 2010**

(51) **LOC (9) Cl.** **24-02**

(52) **U.S. Cl.** **D24/133**; D8/83; D24/145

(58) **Field of Classification Search** ..... D24/145, D24/133, 140, 146–147; D15/17–18; D8/83, D8/94, 107, 300, 301, 303, 307, DIG. 1, D8/DIG. 7, 21; 16/110.1, 422, 426, 430; 81/60, 177.1, 177.3, 489, 177.5, 474, 436; 606/86 R, 86 A, 86 B, 104, 167
See application file for complete search history.

(56) **References Cited**

U.S. PATENT DOCUMENTS

4,238,978 A * 12/1980 Leone 81/480
D315,793 S * 3/1991 Trott D24/147
D394,794 S * 6/1998 Vasudeva D8/107
7,272,998 B1 * 9/2007 Gauthier 81/474
D557,584 S * 12/2007 Gao D8/107
D613,139 S * 4/2010 Lai D8/21
D613,144 S * 4/2010 Lin D8/83
2010/0180731 A1 * 7/2010 Gauthier et al. 81/60
2010/0180732 A1 * 7/2010 Gauthier et al. 81/60
2010/0204703 A1 * 8/2010 Gao 606/104
2010/0294084 A1 * 11/2010 Gauthier et al. 81/60
2011/0112587 A1 * 5/2011 Patel et al. ..... 606/86 A

* cited by examiner

Primary Examiner — Ian Simmons
Assistant Examiner — Wan Laymon
(74) *Attorney, Agent, or Firm* — Boyle Fredrickson, S.C.

(57) **CLAIM**

The ornamental design for a tool, as shown and described.

DESCRIPTION

FIG. **1** is an isometric view of a tool incorporating our new design, wherein the portions illustrated in dotted lines form no part of the claimed design;
FIG. **2** is a front elevation view thereof,
FIG. **3** is a rear elevation view thereof;
FIG. **4** is a top plan view thereof;
FIG. **5** is a bottom plan thereof; and,
FIG. **6** is a left side elevation view thereof, the right side view being a mirror image thereof.

1 Claim, 6 Drawing Sheets

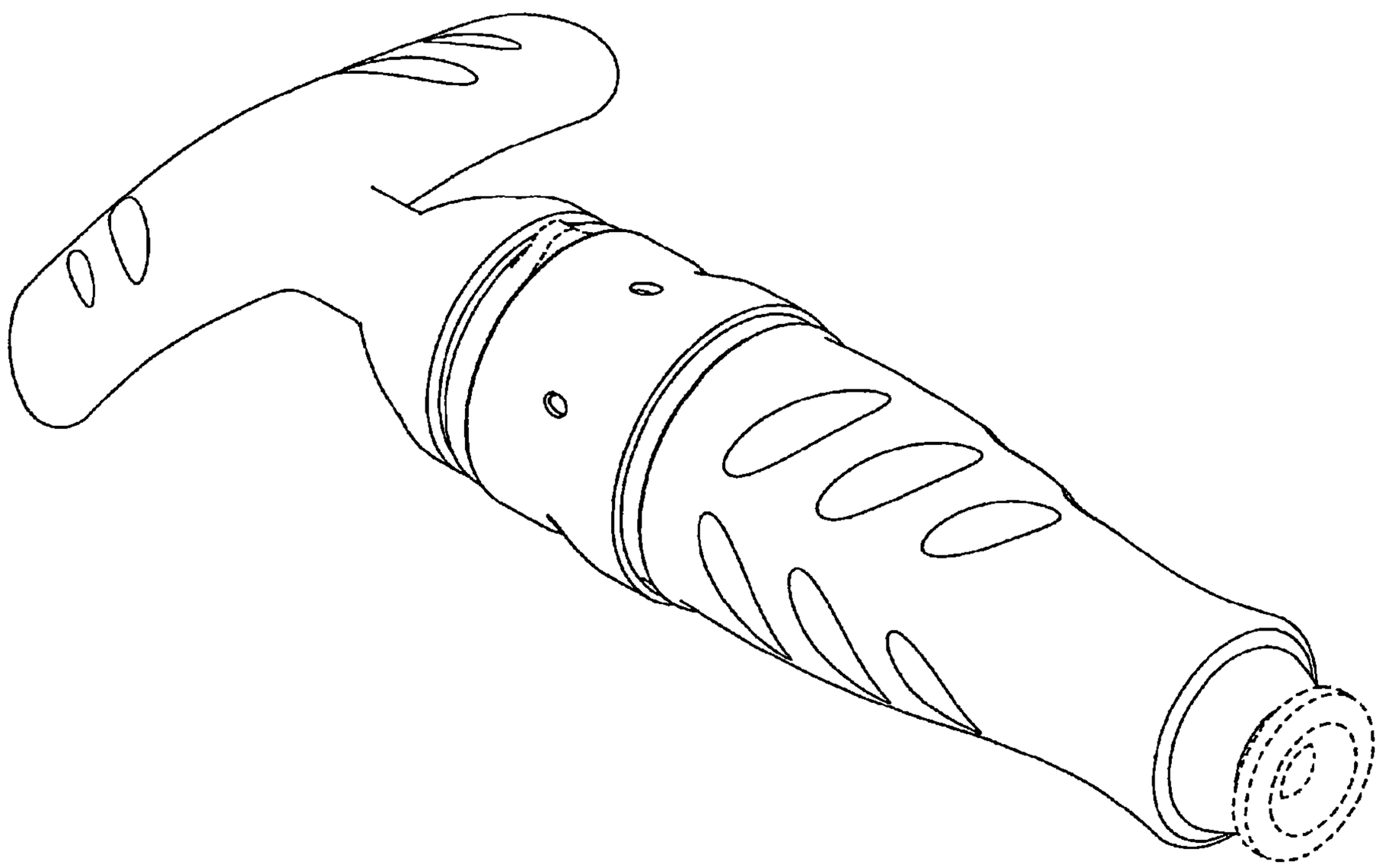

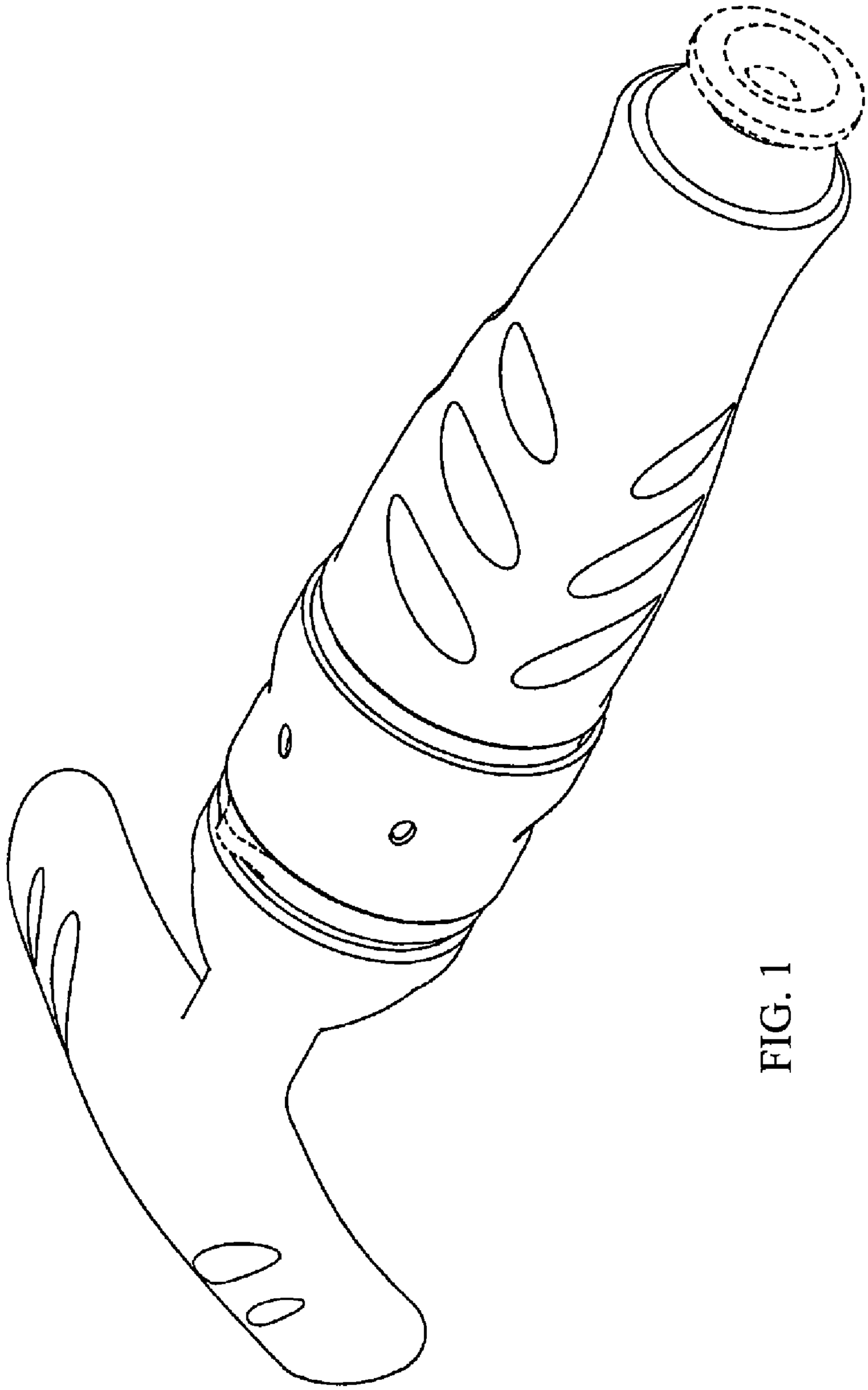

FIG. 1

FIG. 2

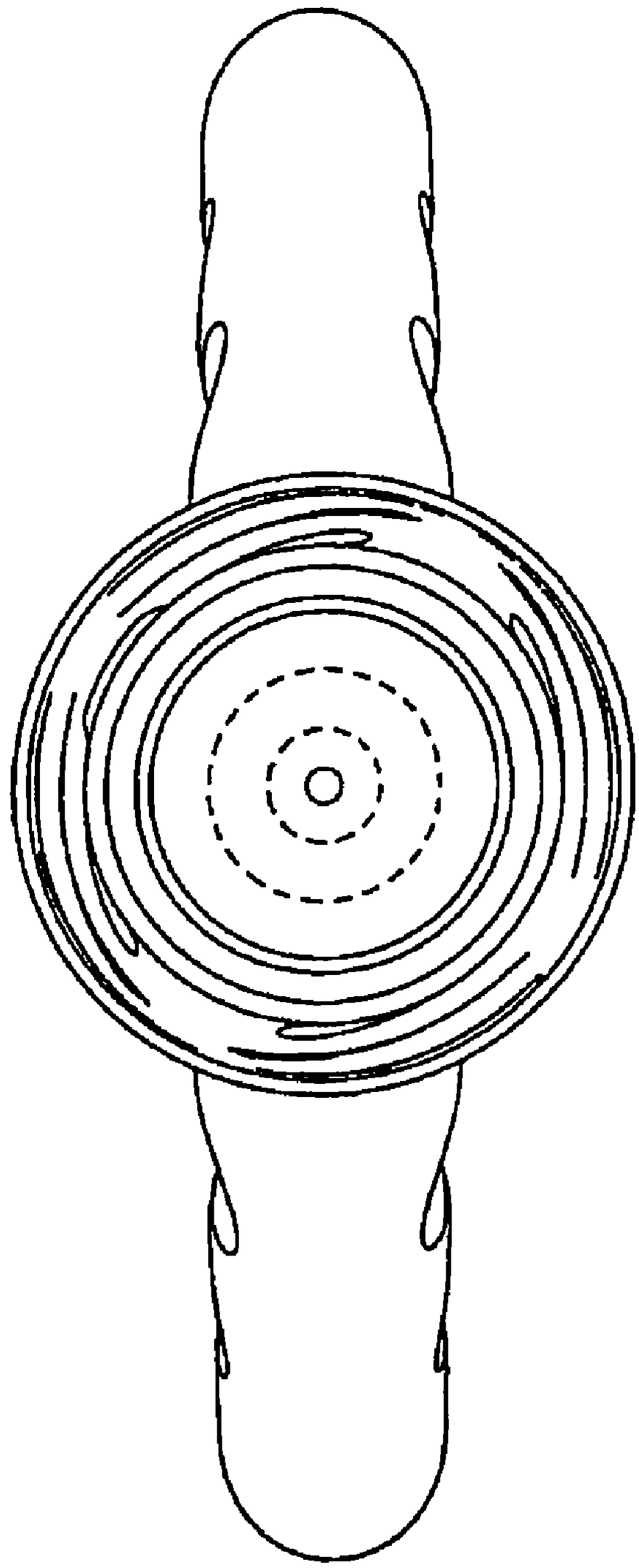

FIG. 3

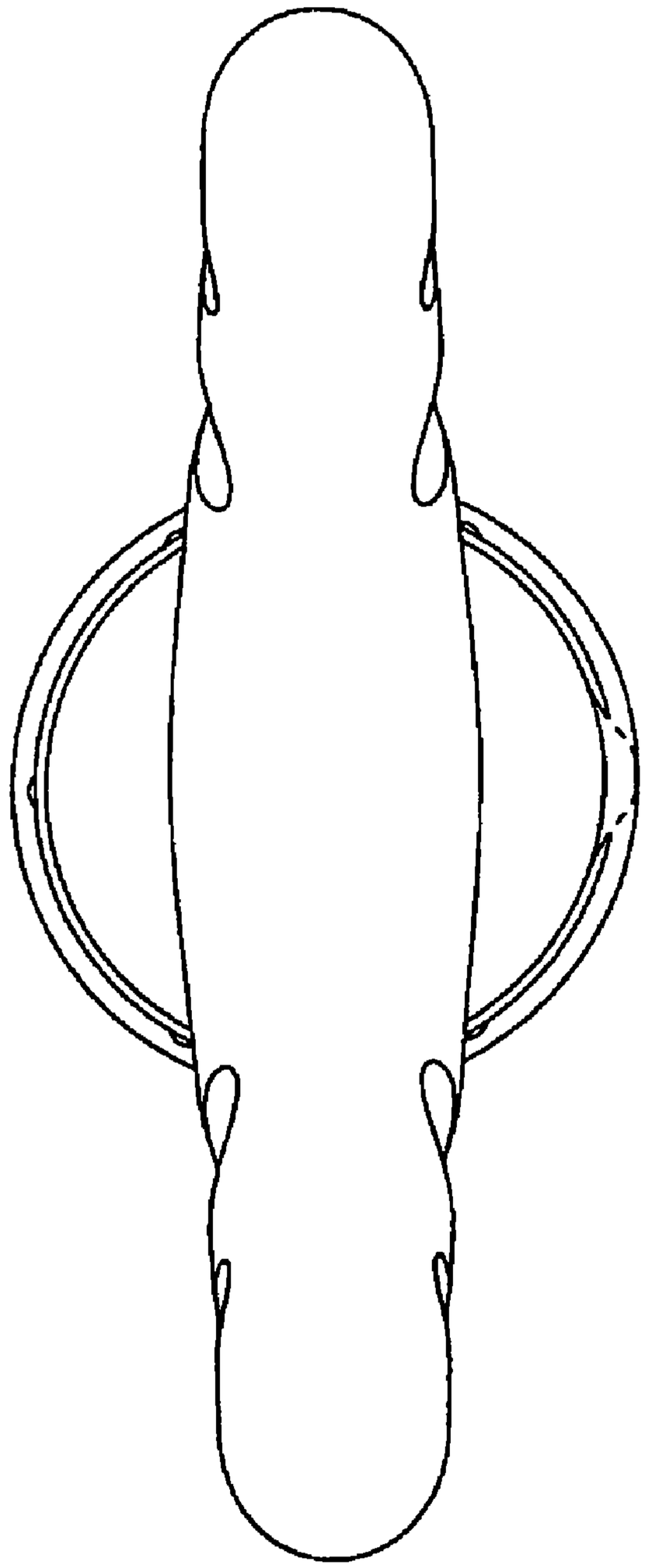

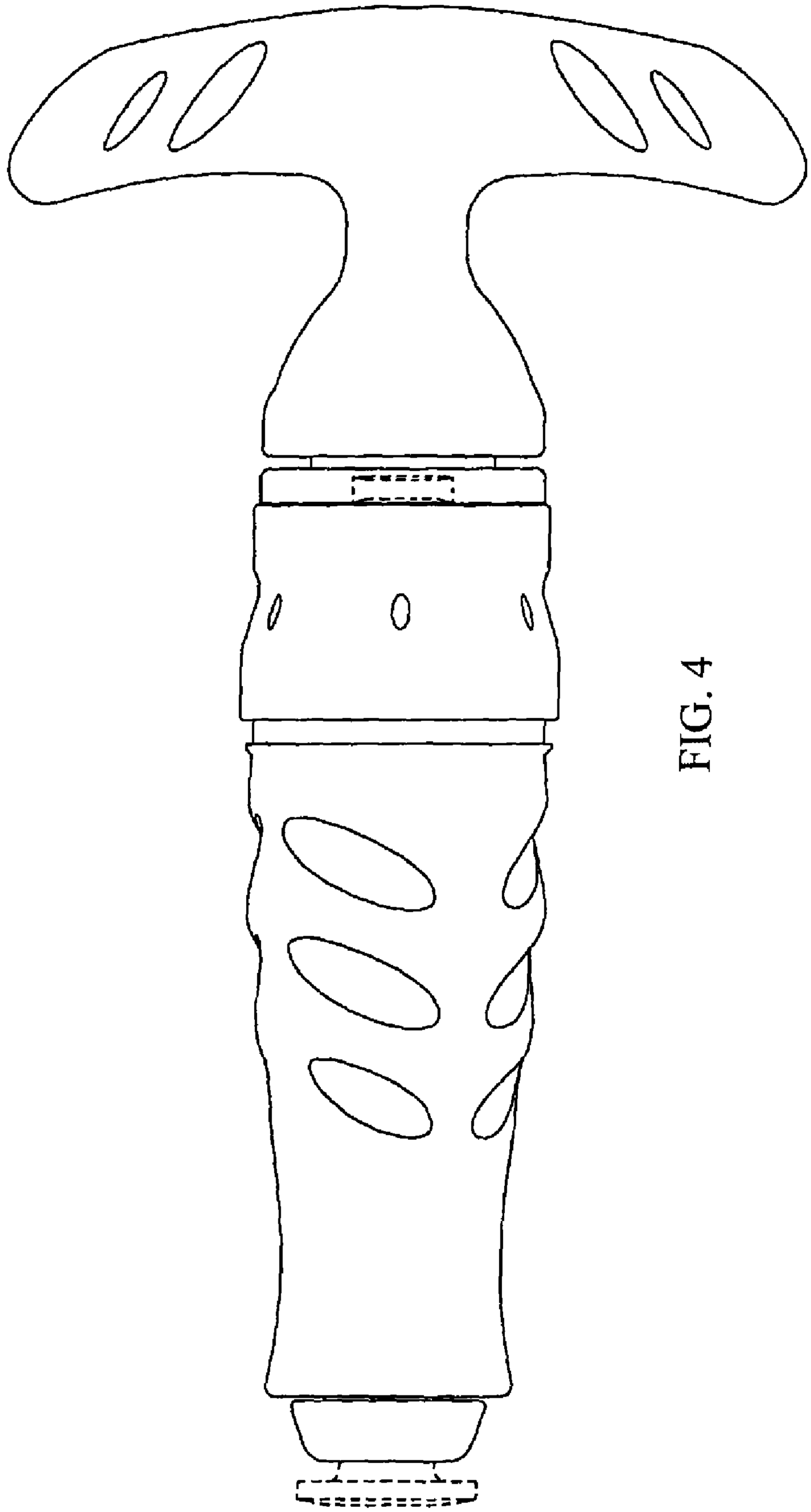

FIG. 4

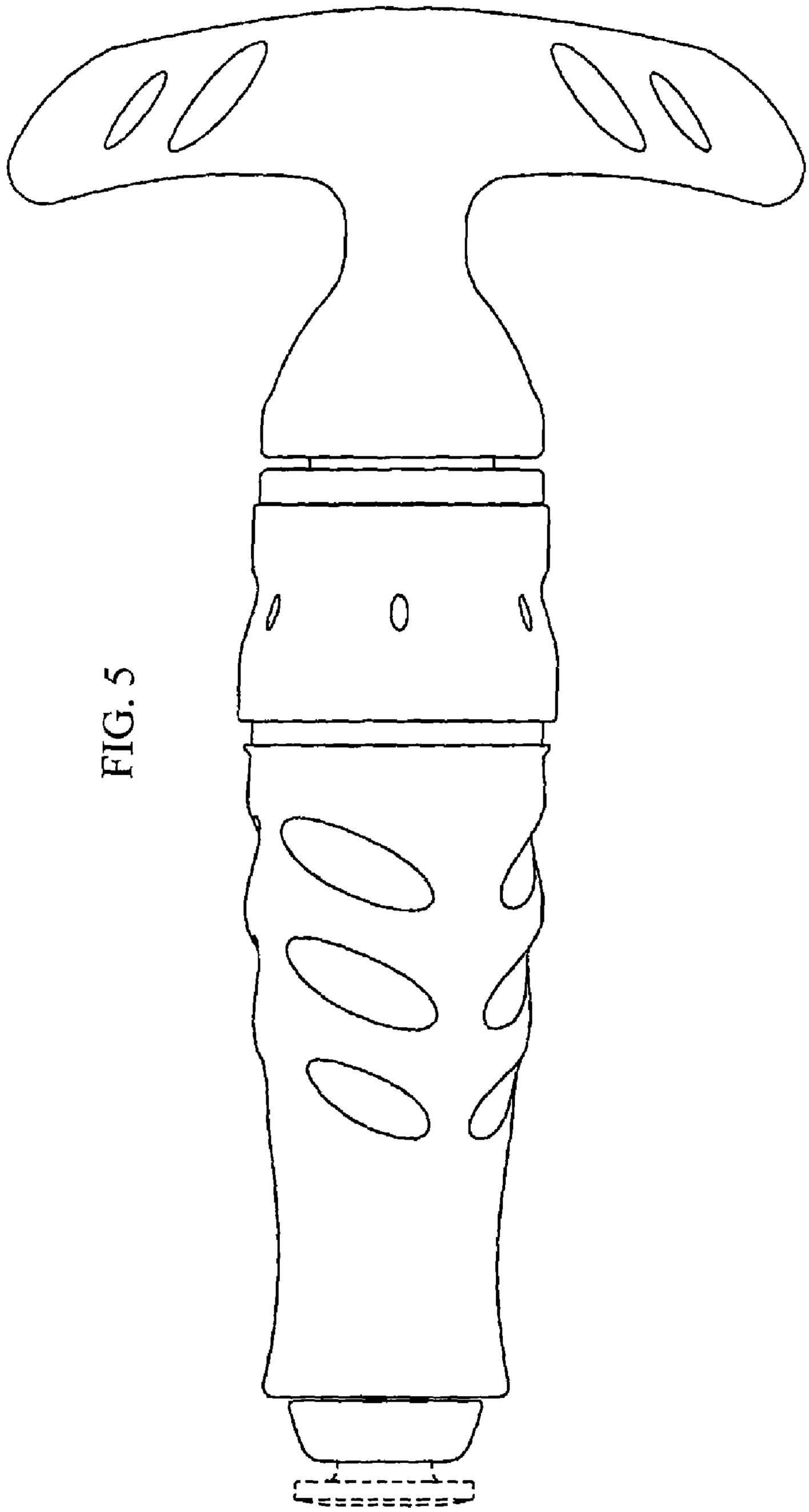

FIG. 5

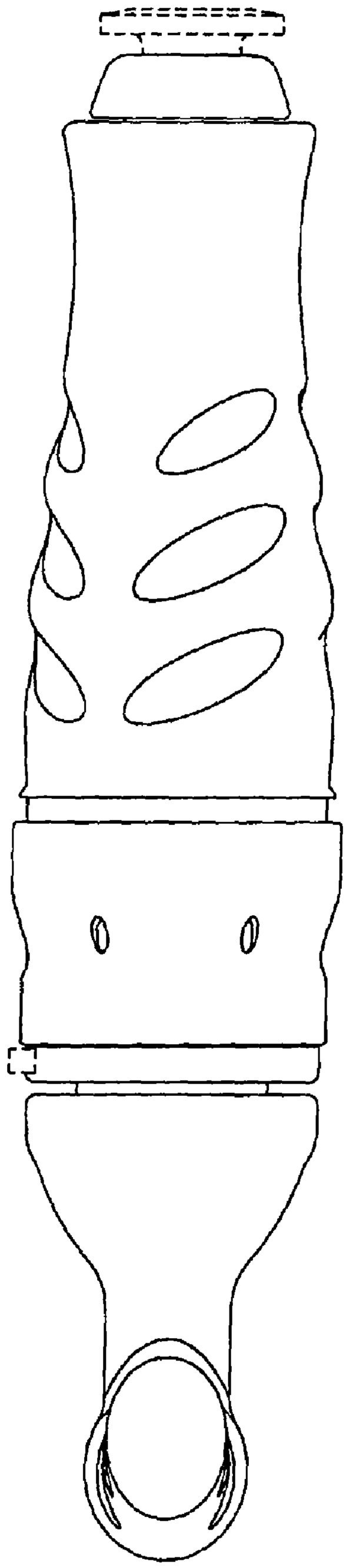

FIG. 6