US00D646527S

(12) United States Design Patent
Gattino

(10) Patent No.: US D646,527 S
(45) Date of Patent: ** Oct. 11, 2011

(54) **ICE BUCKET**

(75) Inventor: **Samy Gattino**, Palaiseau (FR)

(73) Assignee: **Gimex International Groupe Import Export**, Palaiseau (FR)

(**) Term: **14 Years**

(21) Appl. No.: **29/380,825**

(22) Filed: **Dec. 10, 2010**

(30) **Foreign Application Priority Data**

Jun. 10, 2010 (EM) 001717935
Jun. 10, 2010 (EM) 001718081

(51) **LOC (9) Cl.** **07-01**
(52) **U.S. Cl.** **D7/603**
(58) **Field of Classification Search** D7/603–608, D7/625; 62/457.1–457.9, 371, 372, 529, 62/530; 220/592.01, 592.03, 592.16, 592.2, 220/915.1, 915.2; 383/110, 109, 2, 95, 71–74; D3/201, 232, 233, 240; D9/702, 706, 704
See application file for complete search history.

(56) **References Cited**

U.S. PATENT DOCUMENTS

4,047,633 A * 9/1977 Trombly 220/592.2
D246,562 S * 12/1977 Stoddard D7/603
D264,772 S * 6/1982 Motsko D3/260
D281,546 S * 12/1985 Bradshaw D7/607
D505,299 S * 5/2005 Saint Georges D7/604
D506,646 S * 6/2005 Cherney D7/607
D555,008 S 11/2007 Gattino
D581,743 S * 12/2008 Zimmermann D7/603
2007/0017246 A1 * 1/2007 Hoare et al. 62/457.8
2008/0063318 A1 3/2008 Gattino

* cited by examiner

Primary Examiner — Terry Wallace
(74) *Attorney, Agent, or Firm* — Young & Thompson

(57) **CLAIM**

The ornamental design for an ice bucket, as shown and described.

DESCRIPTION

FIG. **1** is a top and side perspective view of an ice bucket showing my new design;
FIG. **2** is a front elevational view thereof;
FIG. **3** is a rear elevational view thereof;
FIG. **4** is a side elevational view thereof from the right of FIG. **3**;
FIG. **5** is a side elevational view thereof from the left of FIG. **3**;
FIG. **6** is a top plan view thereof; and,
FIG. **7** is a bottom plan view thereof.
The material shown in broken lines forms no part of the claimed design.

1 Claim, 6 Drawing Sheets

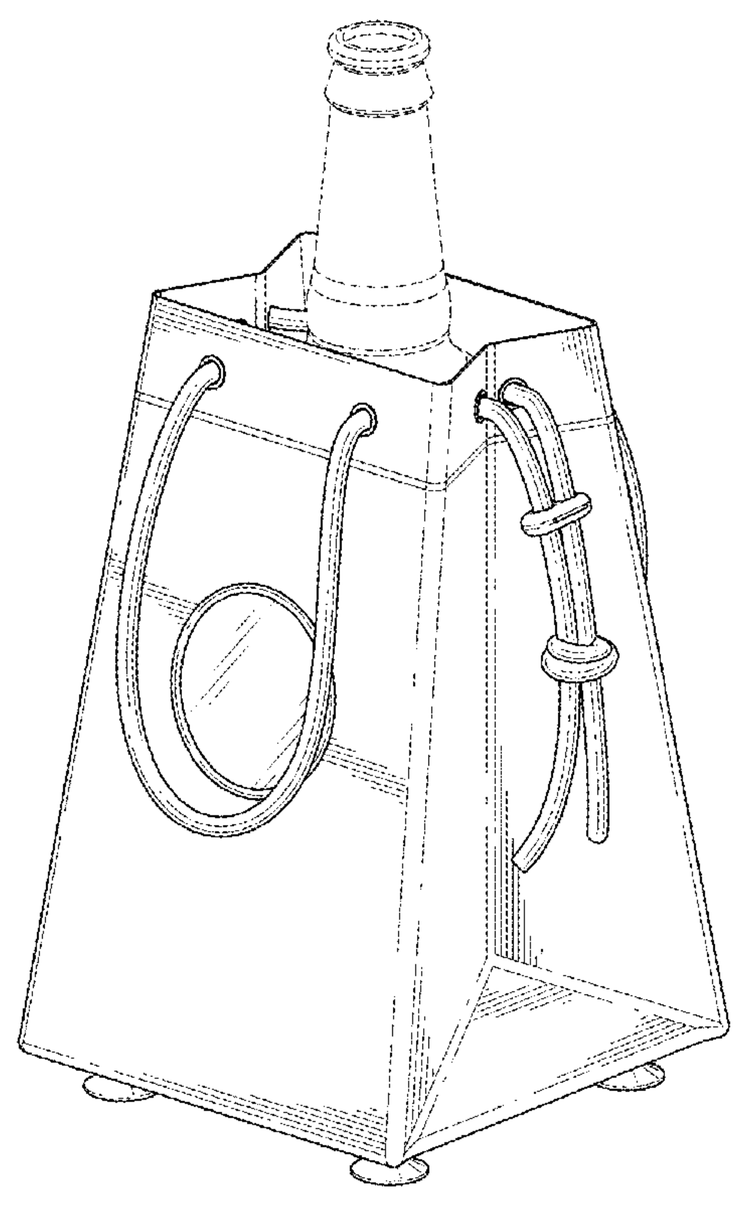

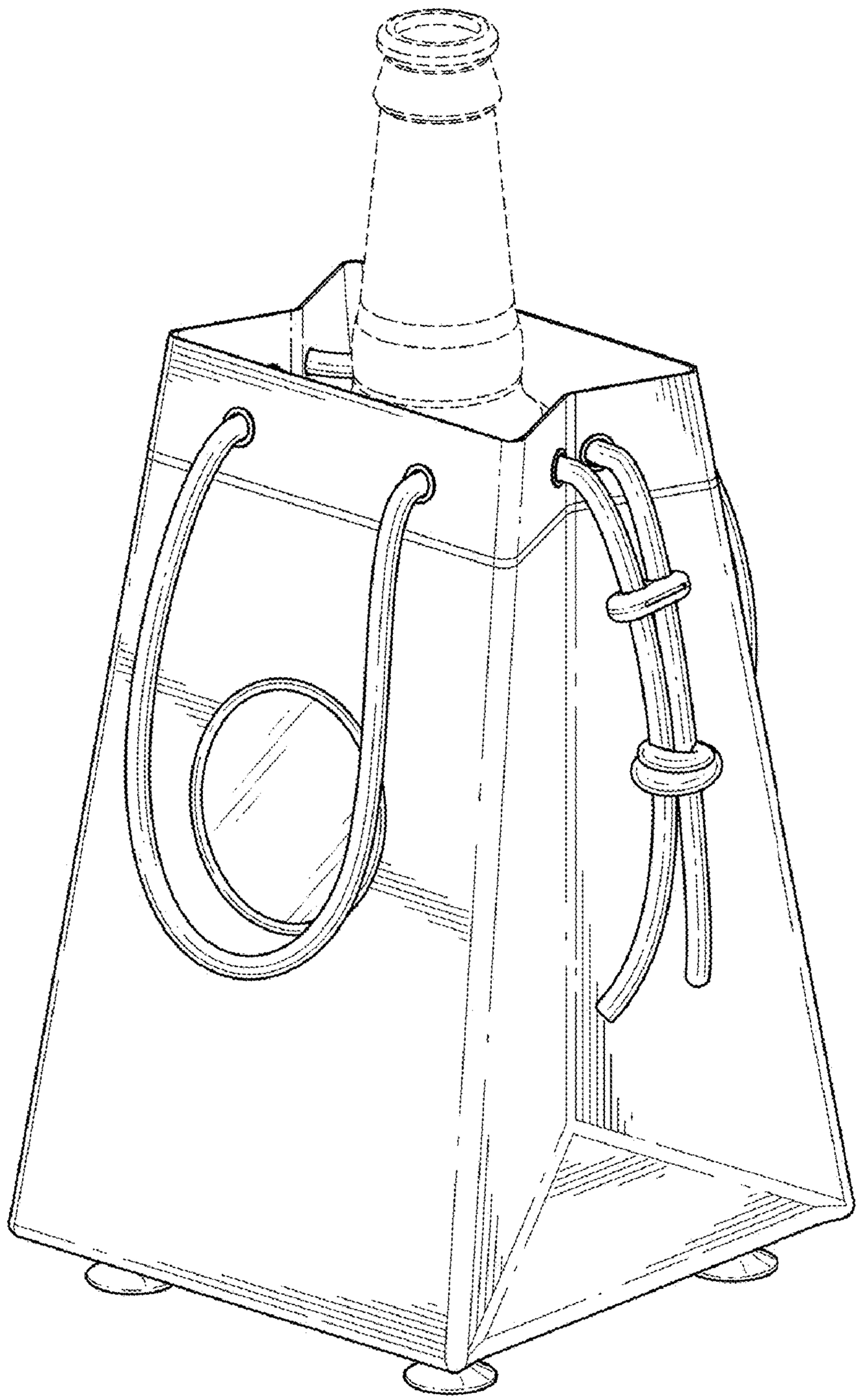

FIG. 1

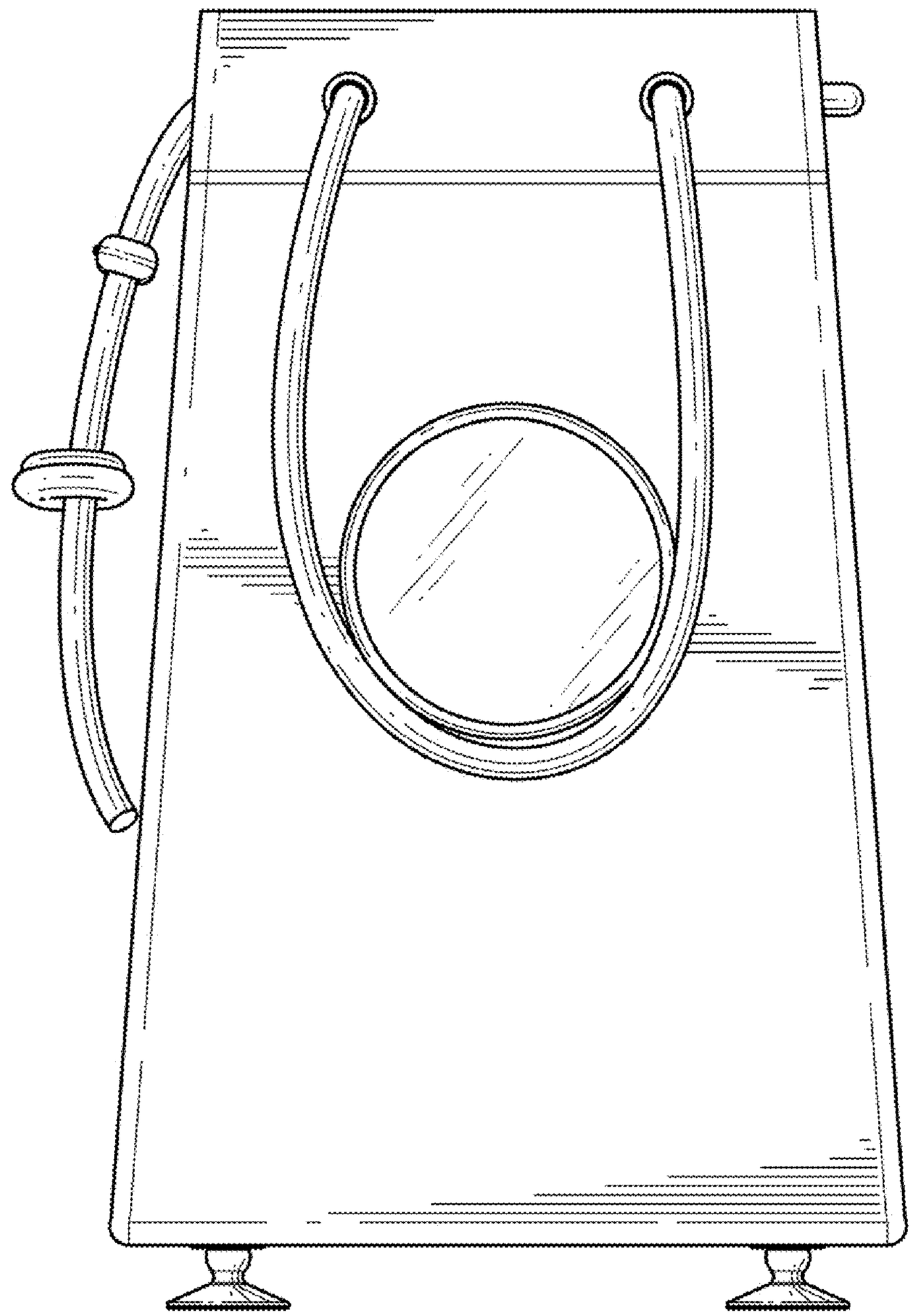

FIG. 2

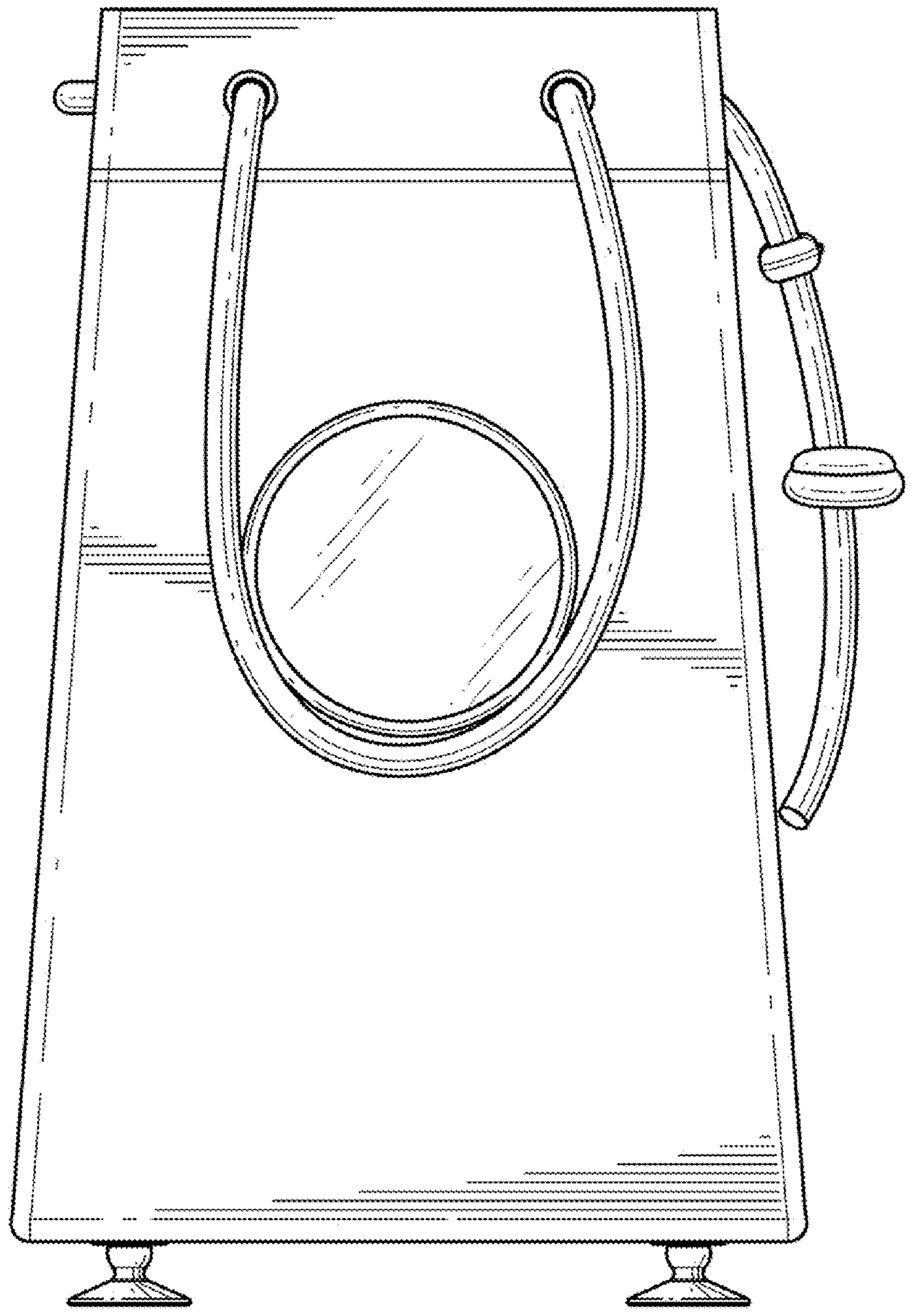

FIG. 3

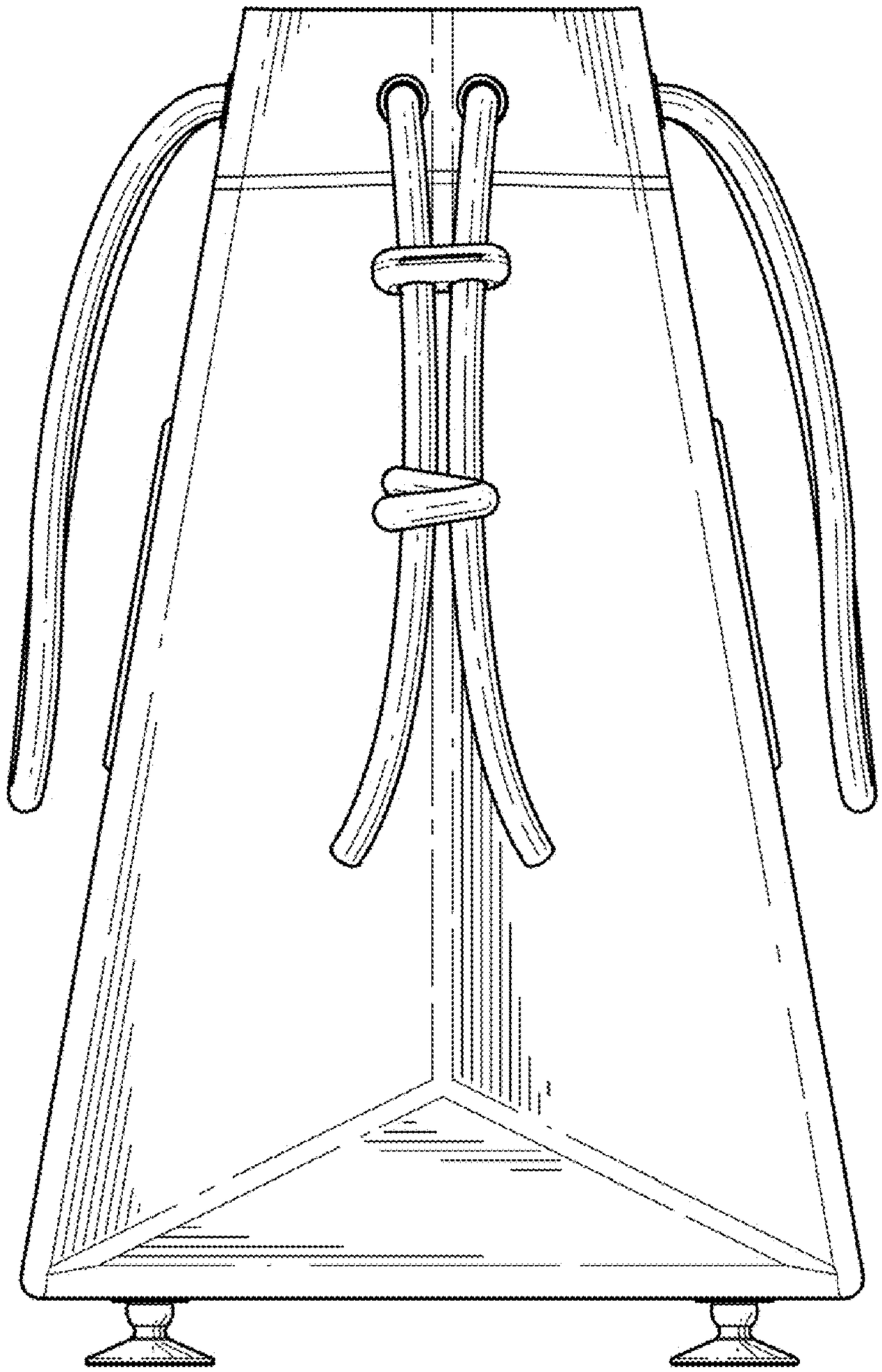

FIG. 4

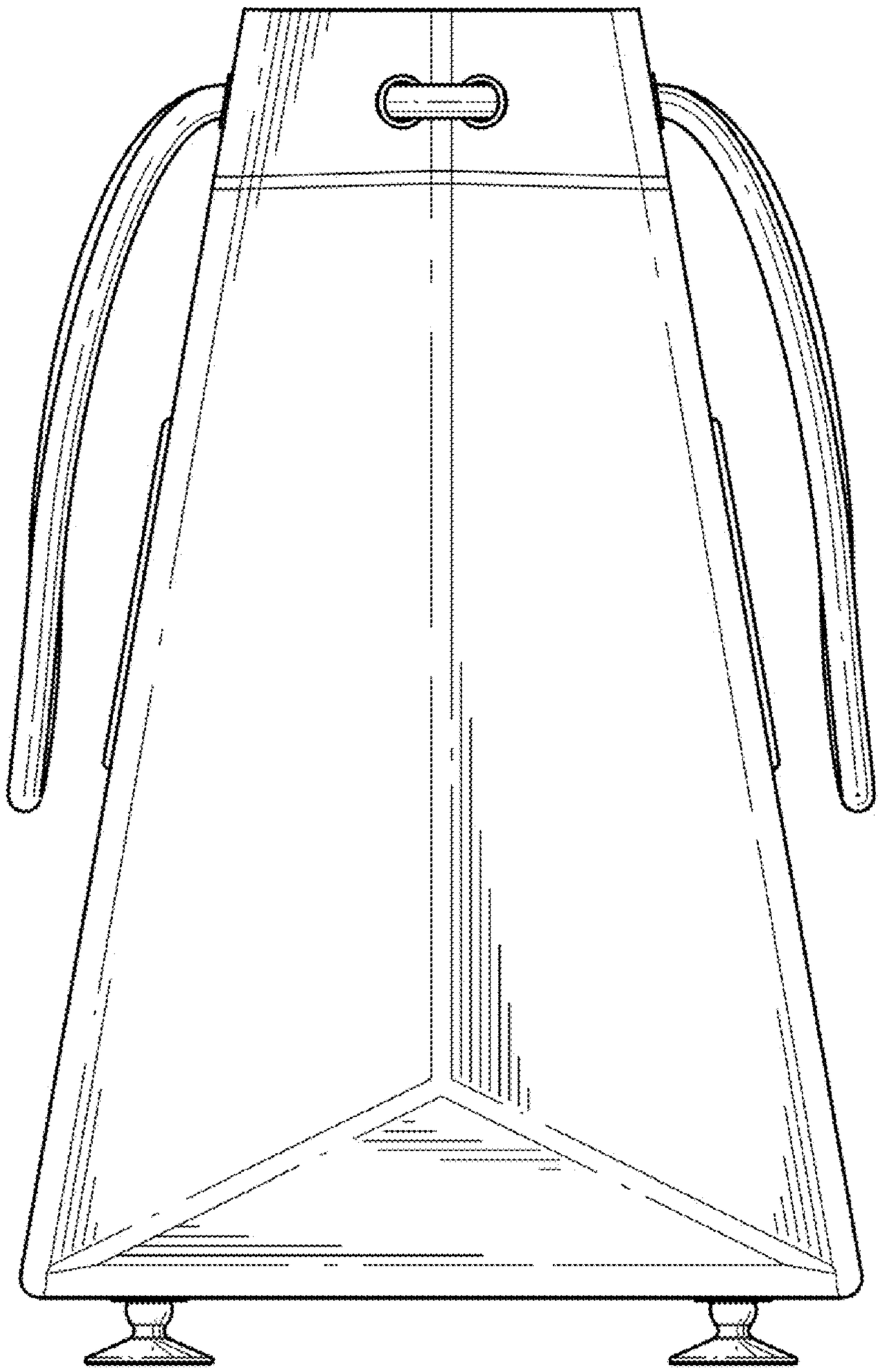

FIG. 5

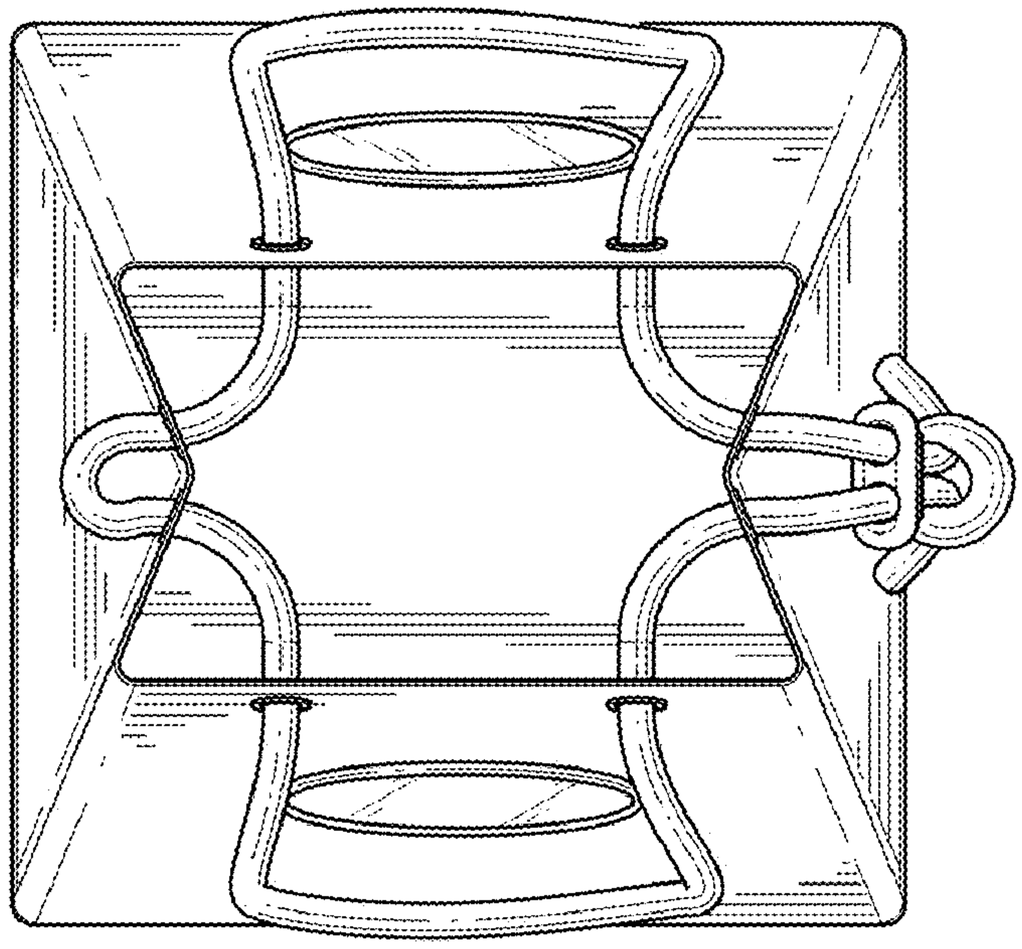

FIG. 6

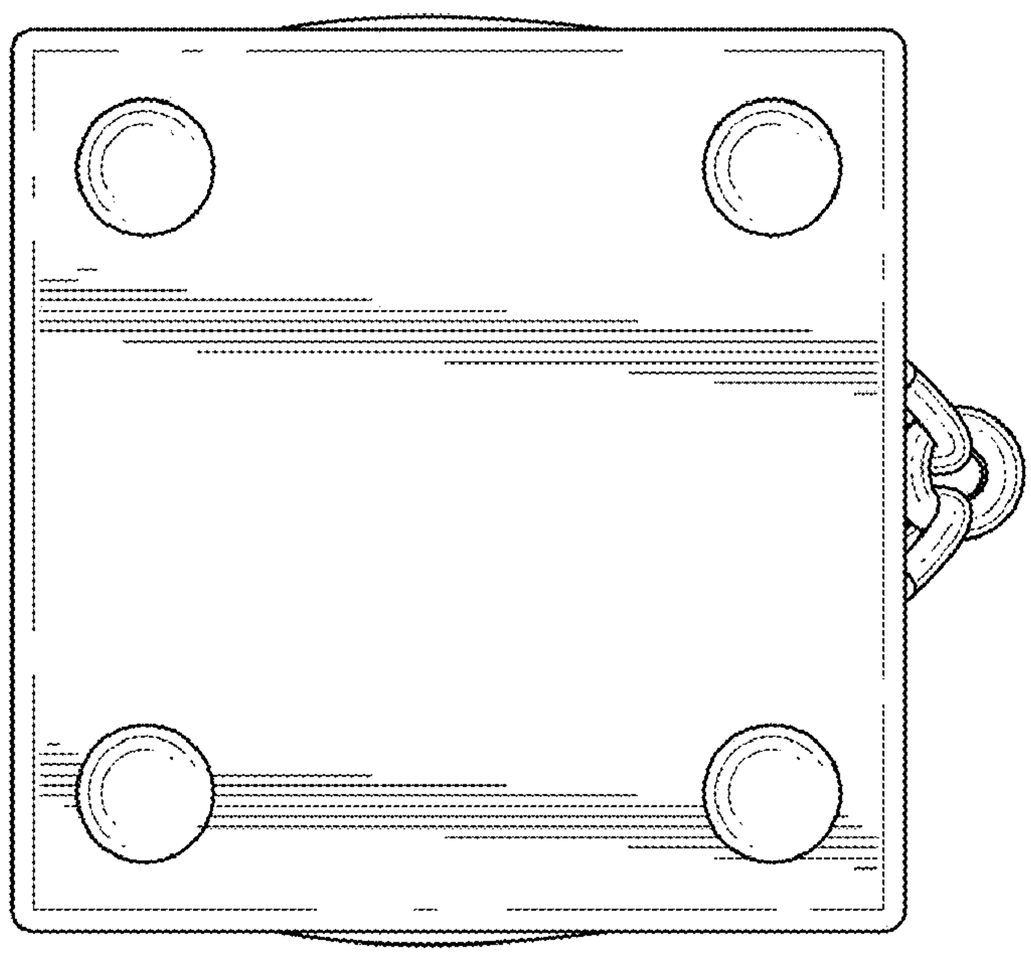

FIG. 7