US00D641854S

(12) United States Design Patent

Seki et al.

(10) Patent No.: US D641,854 S
(45) Date of Patent: ** Jul. 19, 2011

(54) **AIR CONDITIONER**

(75) Inventors: **Kouichirou Seki**, Kusatsu (JP); **Yumi Saitou**, Kusatsu (JP)

(73) Assignee: **Daikin Industrues Ltd.**, Osaka (JP)

(**) Term: **14 Years**

(21) Appl. No.: **29/371,455**

(22) Filed: **Mar. 3, 2011**

(30) **Foreign Application Priority Data**

Sep. 16, 2010 (JP) 2010-022282

(51) **LOC (9) Cl.** **23-04**
(52) **U.S. Cl.** **D23/351**
(58) **Field of Classification Search** D23/351–354, D23/385, 355, 357, 361; 312/236; 62/259.1, 62/259.4, 262–263, 304; 454/330–331, 349–350
See application file for complete search history.

(56) **References Cited**

U.S. PATENT DOCUMENTS

D450,823 S * 11/2001 Kobayashi D23/351
D456,016 S * 4/2002 Denson
D529,595 S * 10/2006 Ueno et al. D23/351
D536,430 S * 2/2007 Miyake et al. D23/351
D539,889 S * 4/2007 Chooji et al. D23/351
D550,822 S * 9/2007 Shimizu et al. D23/351
D553,721 S * 10/2007 Seki et al. D23/351
D558,866 S * 1/2008 Yamamoto D23/351
D565,158 S * 3/2008 Nagahori D23/351
D579,095 S * 10/2008 Nagahori et al. D23/351
D580,035 S * 11/2008 Seki D23/351
D587,793 S * 3/2009 Seki D23/351
D605,265 S * 12/2009 Nakamura et al. D23/351
D605,267 S * 12/2009 Nakamura et al.
D613,384 S * 4/2010 Ohta
D613,842 S * 4/2010 Yamashita
D613,843 S * 4/2010 Ohta
D616,083 S * 5/2010 Saitou
D619,234 S * 7/2010 Nakamura et al.
D621,018 S * 8/2010 Nagahori et al.
D621,920 S * 8/2010 Yamana et al.
D624,167 S * 9/2010 Mishiro et al.
D624,168 S * 9/2010 Aketa et al.
D628,686 S * 12/2010 Motonishi et al.
D632,769 S * 2/2011 Seki

* cited by examiner

Primary Examiner — Brian N Vinson
(74) *Attorney, Agent, or Firm* — Manabu Kanesaka

(57) **CLAIM**

The ornamental design for an air conditioner, as shown and described.

DESCRIPTION

FIG. **1** is a front, bottom, and right side perspective view of an air conditioner showing our new design;
FIG. **2** is a front elevational view thereof;
FIG. **3** is a rear elevational view thereof;
FIG. **4** is a top plan view thereof;
FIG. **5** is a bottom plan view thereof;
FIG. **6** is a left side elevational view thereof;
FIG. **7** is a right side elevational view thereof; and,
FIG. **8** is a vertical cross-sectional view thereof taken along line **8**—**8** in FIG. **2**, with the broken-line disclosure understood to show internal elements which are part of the article in which the claimed design is embodied, but which form no part of the claimed design.

1 Claim, 6 Drawing Sheets

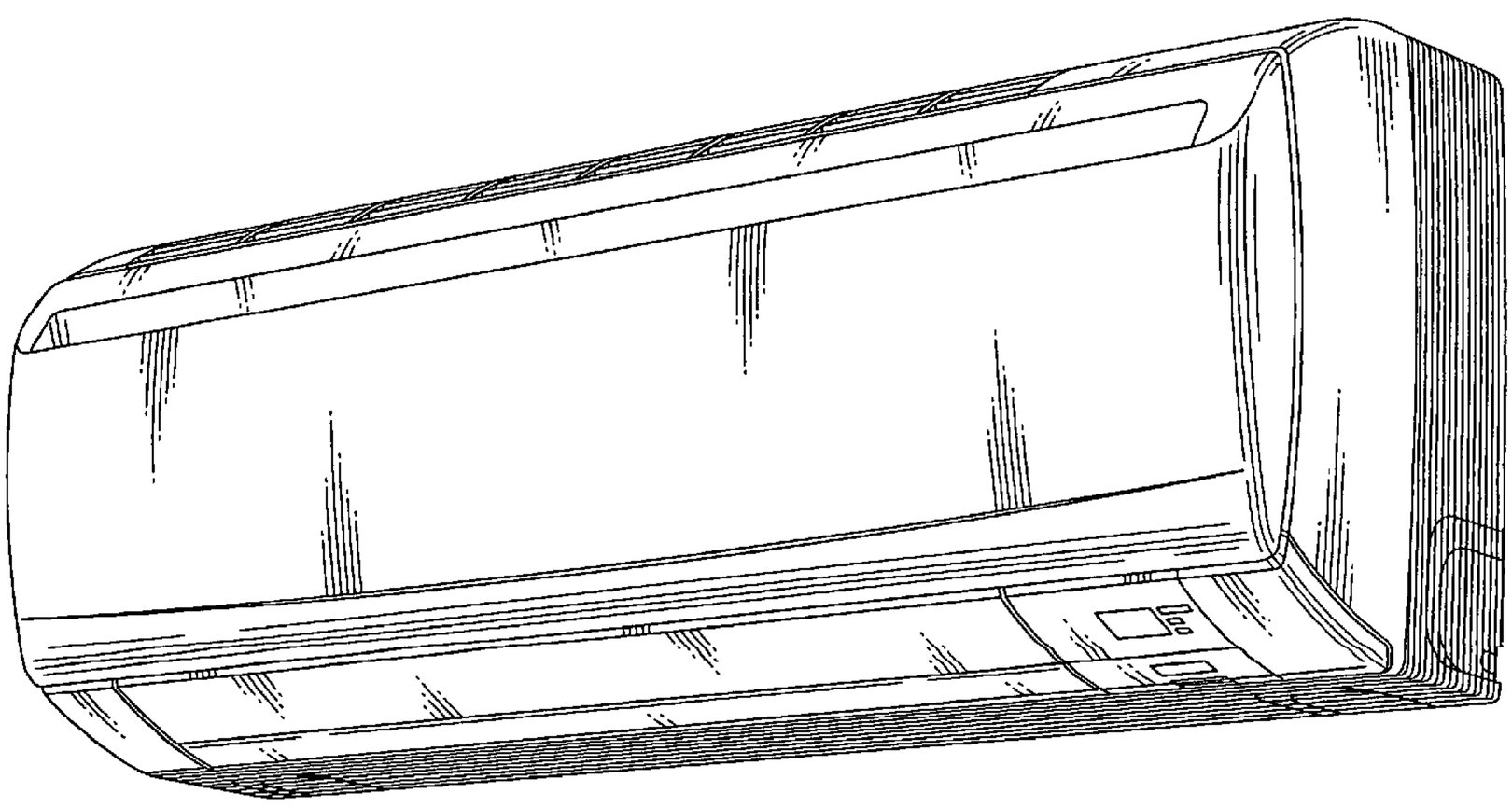

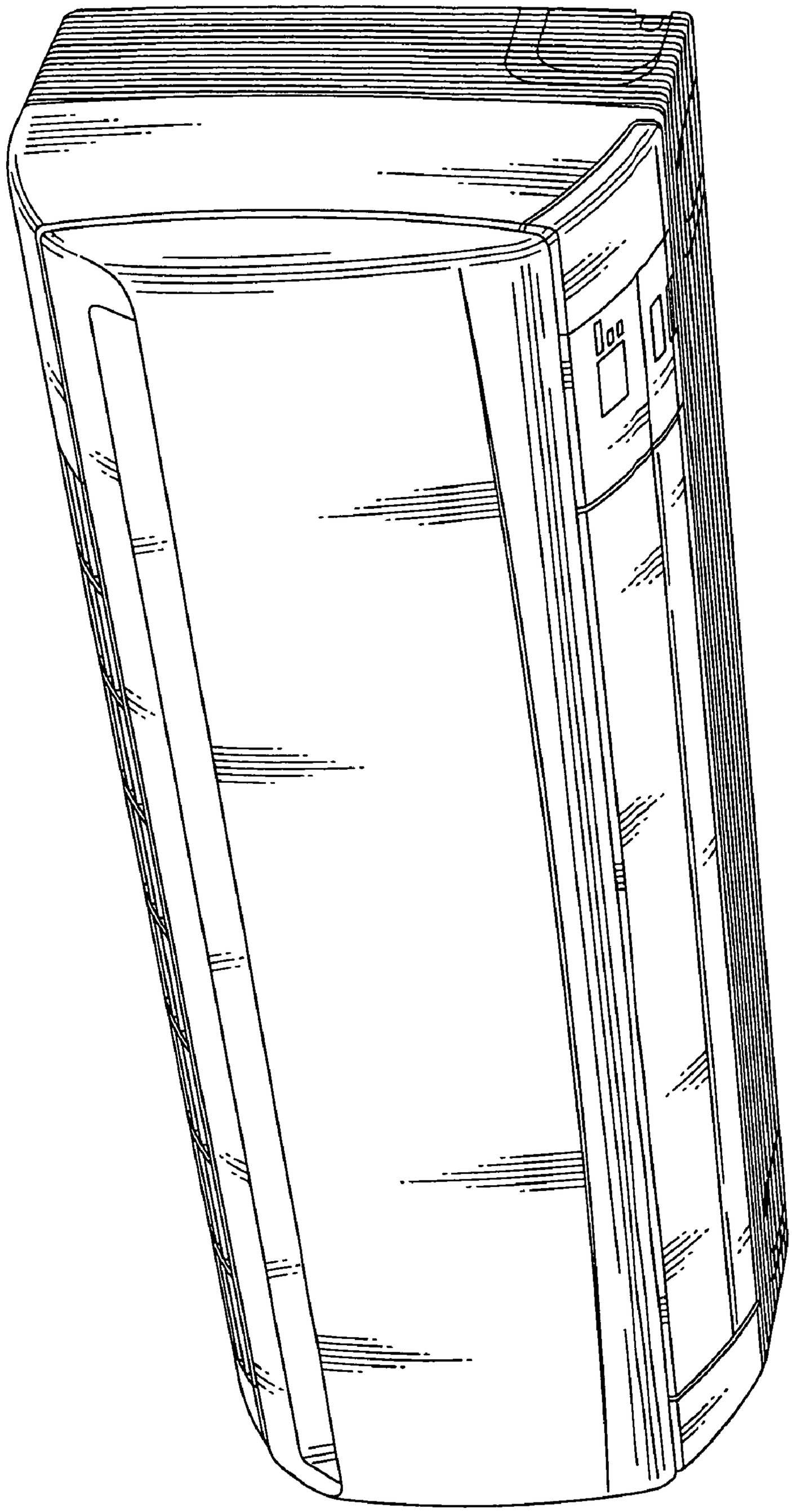

Fig. 1

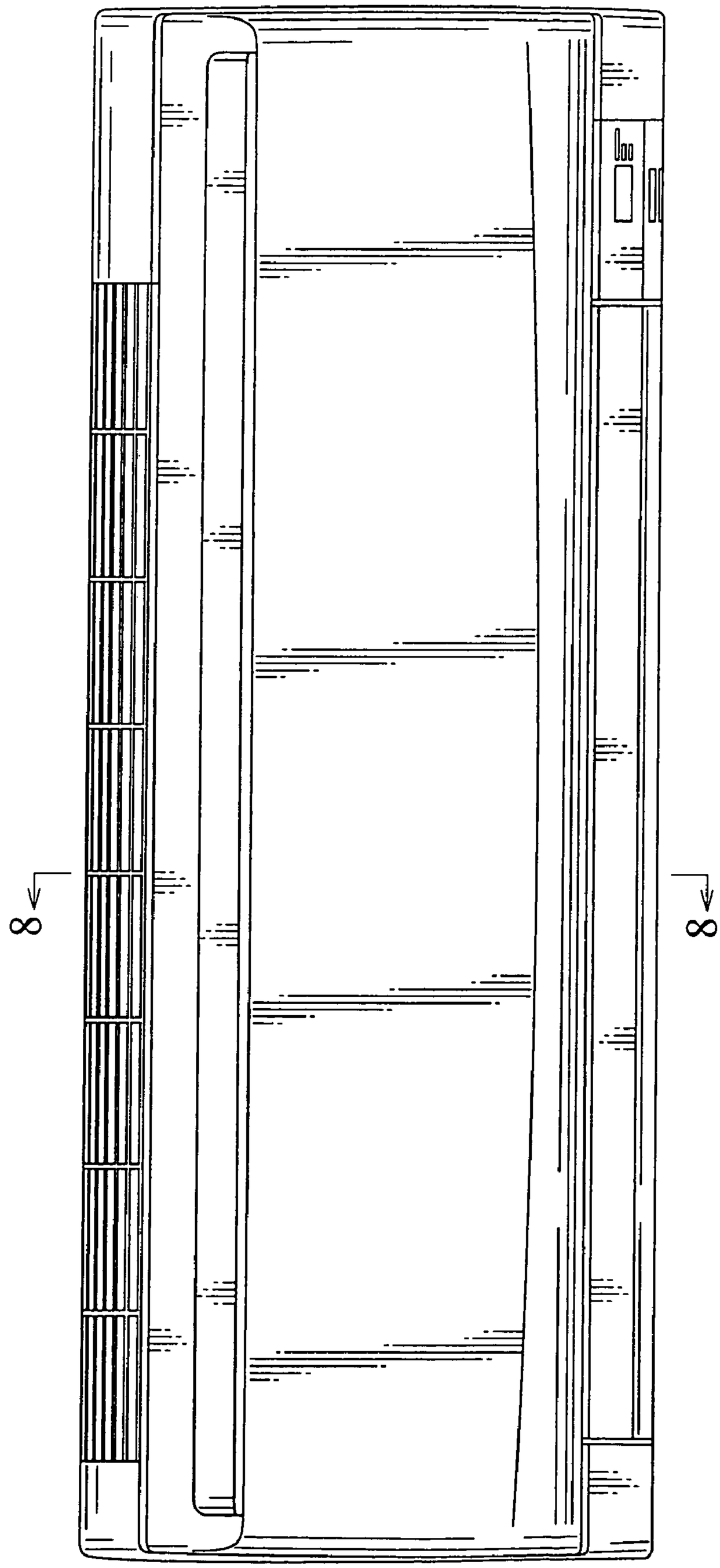

Fig. 2

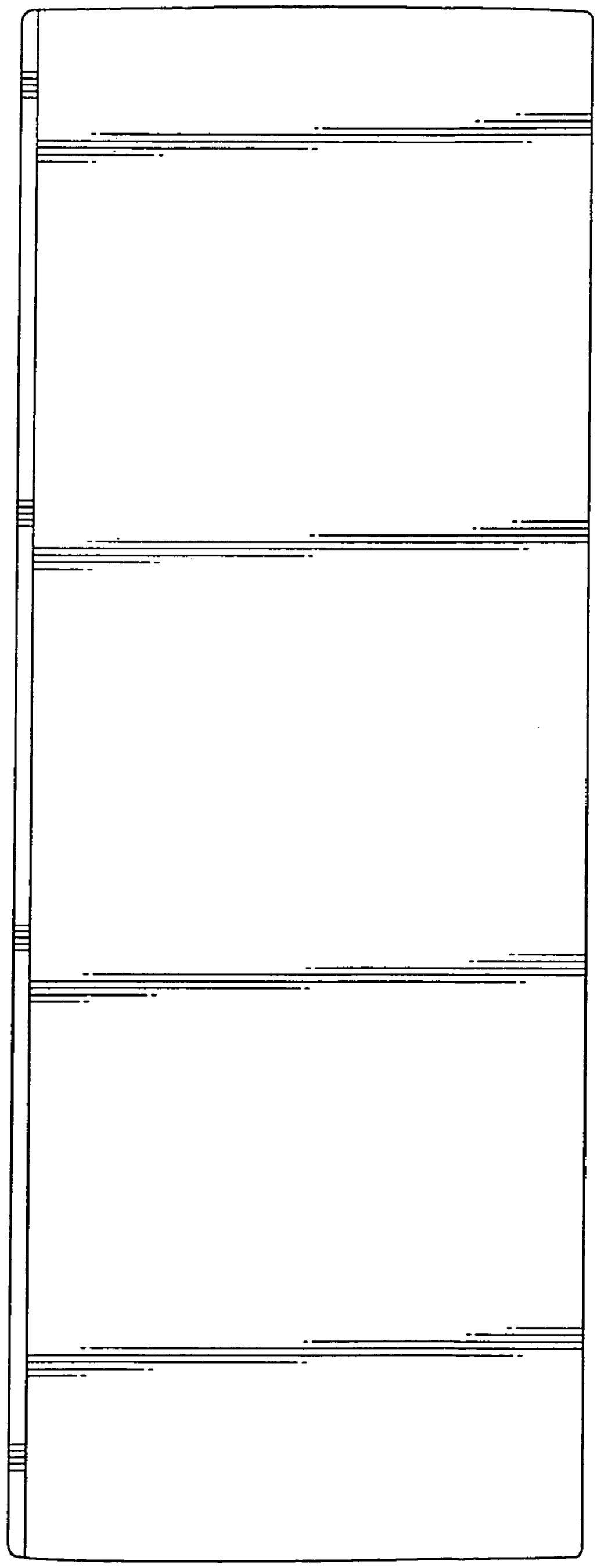

Fig. 3

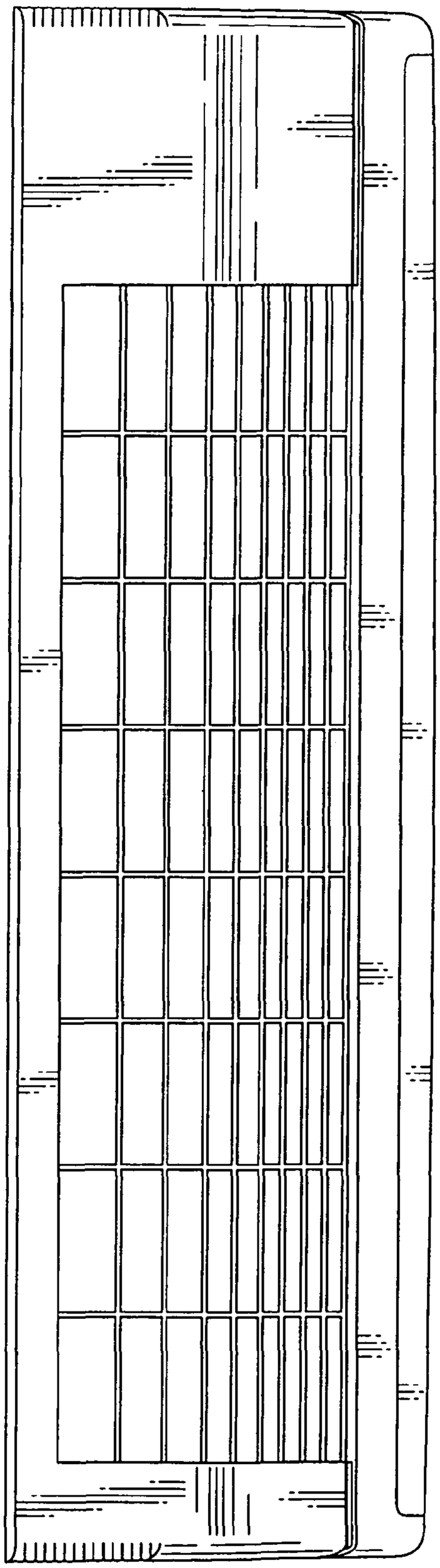

Fig. 4

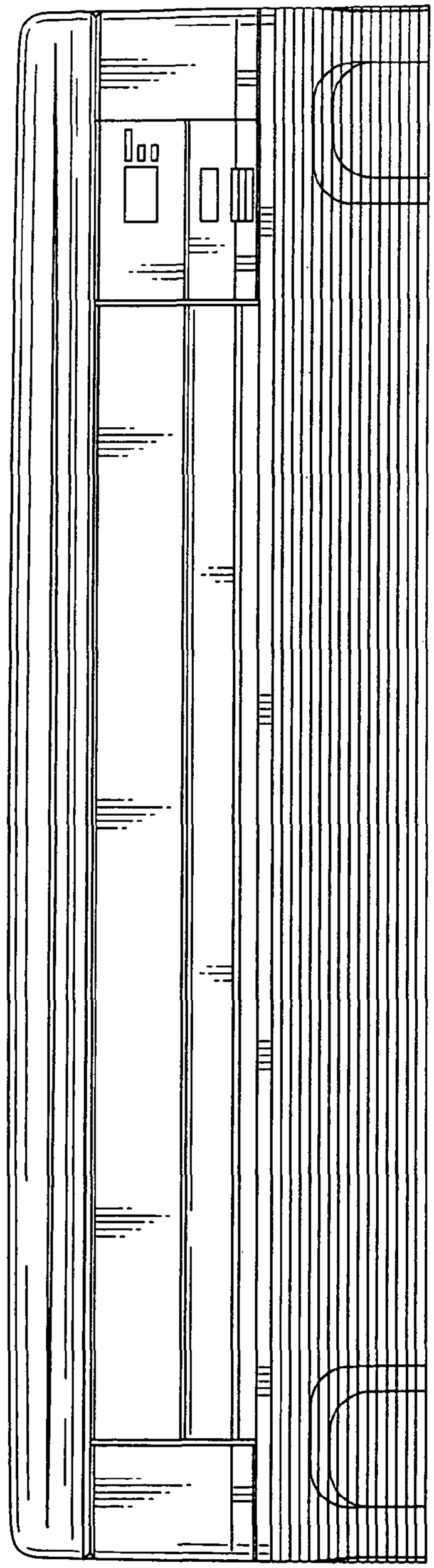

Fig. 5

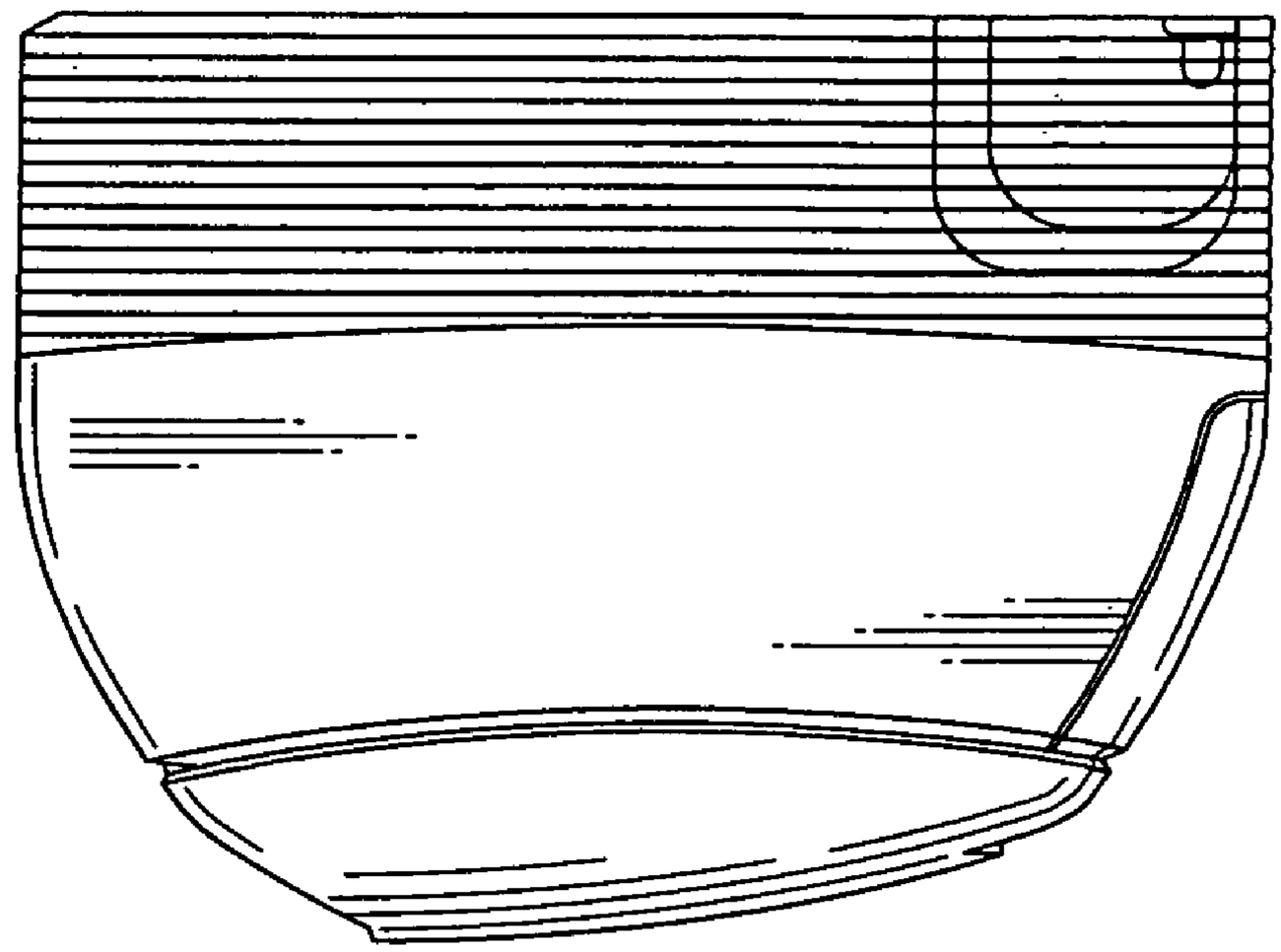

Fig. 7

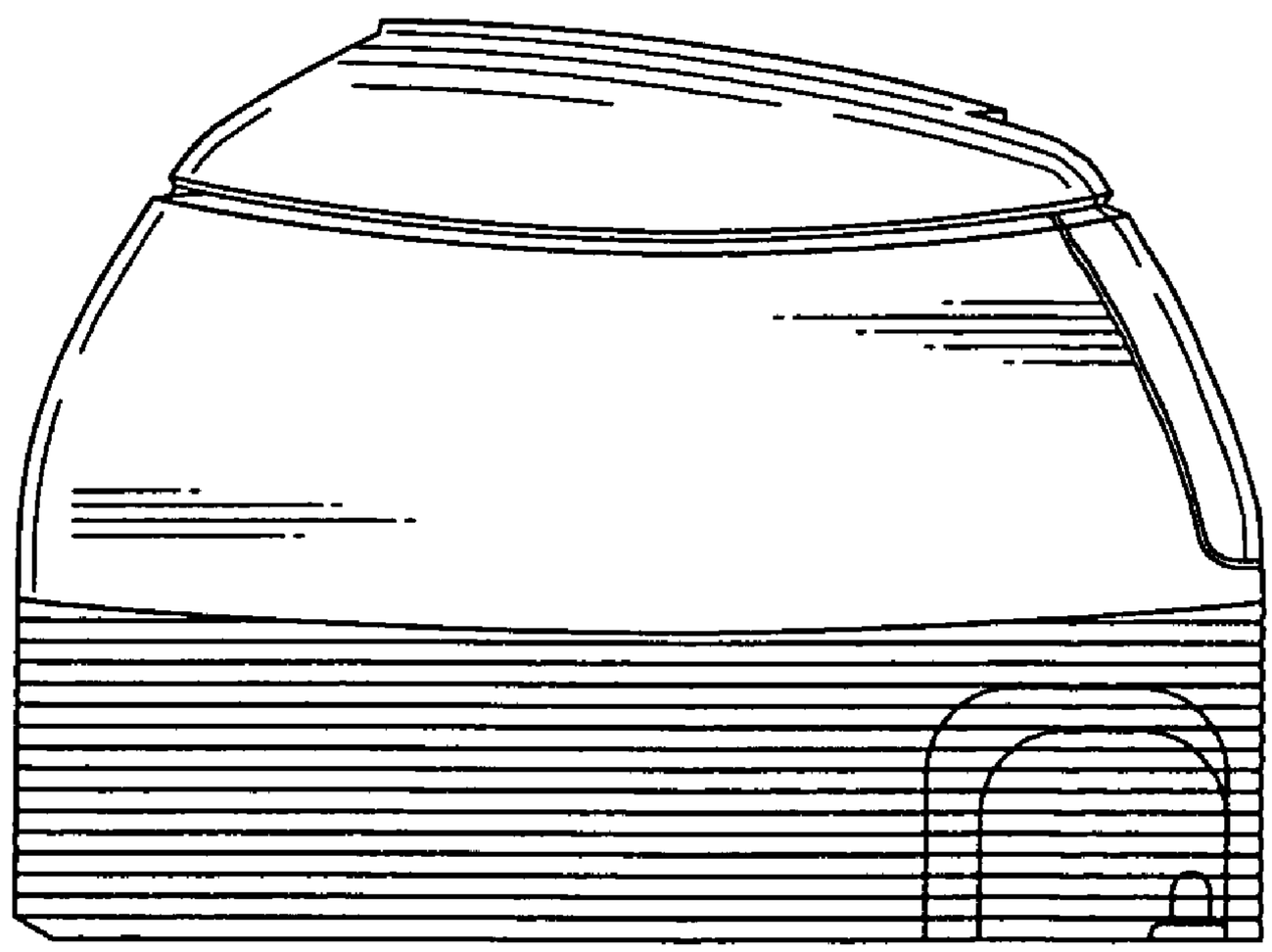

Fig. 6
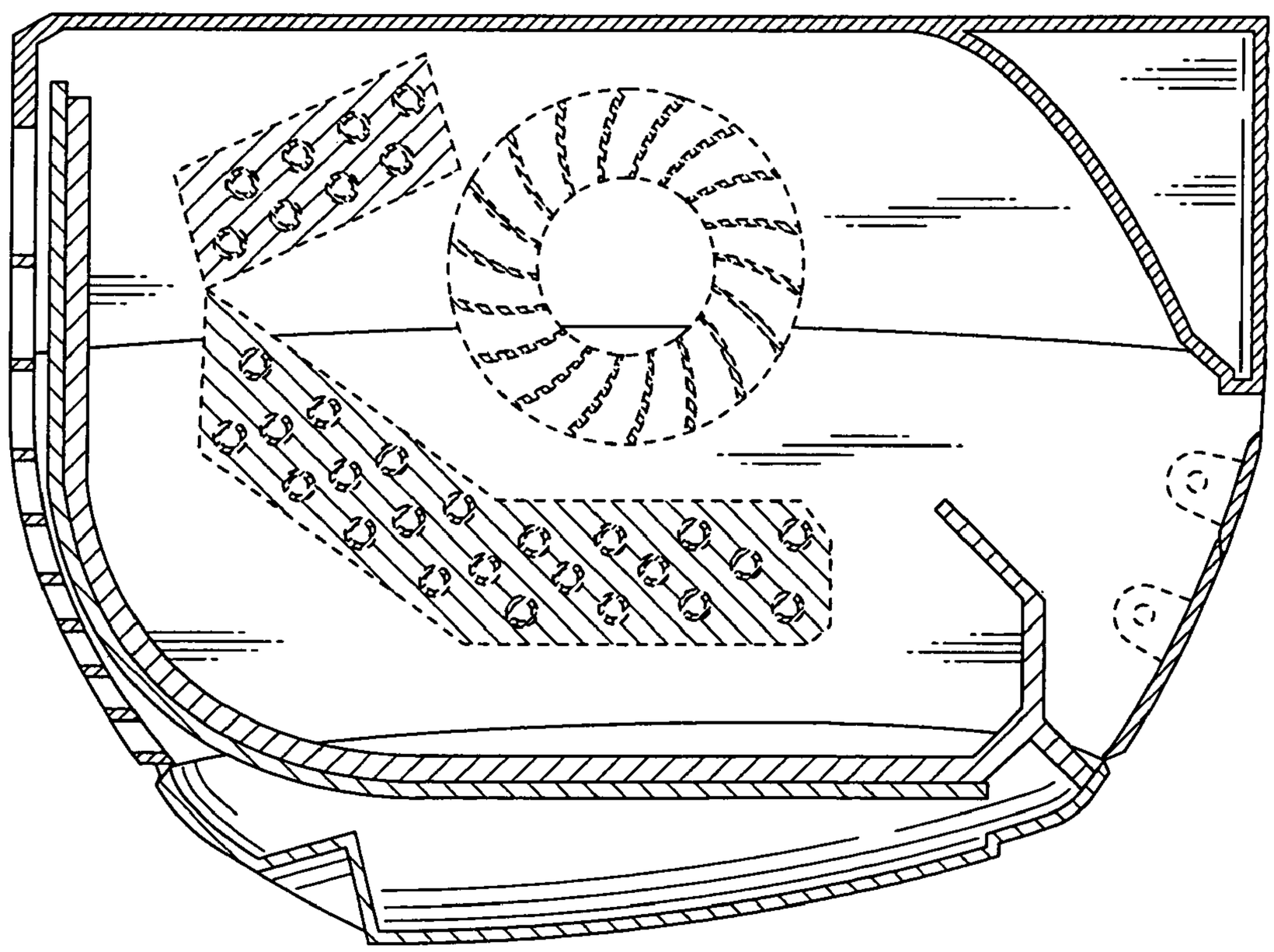
Fig. 8