US00D639435S

(12) United States Design Patent

Hara

(10) Patent No.: US D639,435 S
(45) Date of Patent: ** Jun. 7, 2011

(54) **BLOOD PRESSURE MEASURING APPARATUS**

(75) Inventor: **Shigehito Hara**, Yokohama (JP)

(73) Assignee: **Panasonic Electric Works Co., Ltd.**, Kadoma-shi (JP)

(**) Term: **14 Years**

(21) Appl. No.: **29/362,700**

(22) Filed: **May 28, 2010**

(30) **Foreign Application Priority Data**

Dec. 24, 2009 (JP) 2009-029956

(51) **LOC (9) Cl.** **24-02**

(52) **U.S. Cl.** **D24/165**

(58) **Field of Classification Search** D24/164–169, D24/107, 186, 187; D10/46, 78, 98; 600/301, 600/481–483, 485, 490, 493–495, 500, 503, 600/509, 323, 383, 384; 128/900
See application file for complete search history.

(56) **References Cited**

U.S. PATENT DOCUMENTS

D403,070	S	*	12/1998	Maeda et al.	D24/165
D406,346	S	*	3/1999	Hirakawa	D24/165
D426,637	S	*	6/2000	Ochi et al.	D24/165
D448,485	S	*	9/2001	Nalbandian et al.	D24/165
D449,890	S	*	10/2001	Semeriva	D24/165
D484,980	S	*	1/2004	Hartwein et al.	D24/165
D496,103	S	*	9/2004	Hartwein	D24/165
D525,710	S	*	7/2006	Kobayashi et al.	D24/165
D535,028	S	*	1/2007	Kobayashi et al.	D24/165
D561,340	S	*	2/2008	Kitamura et al.	D24/165

FOREIGN PATENT DOCUMENTS

JP 08-107885 A 4/1996

* cited by examiner

Primary Examiner — T. Chase Nelson
Assistant Examiner — Anhdao Doan
(74) *Attorney, Agent, or Firm* — Marvin A. Motsenbocker; Mots Law, PLLC

(57) **CLAIM**

The ornamental design for a blood pressure measuring apparatus, as shown and described.

DESCRIPTION

FIG. **1** is a perspective view of a blood pressure measuring apparatus;
FIG. **2** is a front view thereof;
FIG. **3** is a right side view thereof;
FIG. **4** is a top plan view thereof;
FIG. **5** is a bottom plan view thereof;
FIG. **6** is a rear view thereof;
FIG. **7** is a sectional view taken along line **7**—**7** of FIG. **2**, in which the internal components are omitted;
FIG. **8** is a sectional view taken along line **8**—**8** of FIG. **2**, in which the internal components are omitted;
FIG. **9** is a sectional view taken along line **9**—**9** of FIG. **10**, in which the internal components are omitted;
FIG. **10** is a left side view thereof;
FIG. **11** is a reference perspective view thereof in condition of use; and,
FIG. **12** is a reference front view thereof showing reference display.

The broken lines showing the internal components in FIGS. **7-9** are included for the purpose of illustrating portions of the blood pressure measuring apparatus that form no part of the claimed design. The broken lines showing the blood pressure cuff in FIG. **11** and screen display in FIG. **12** represent the environmental subject matters. None of the broken lines form a part of the claimed design.

1 Claim, 12 Drawing Sheets

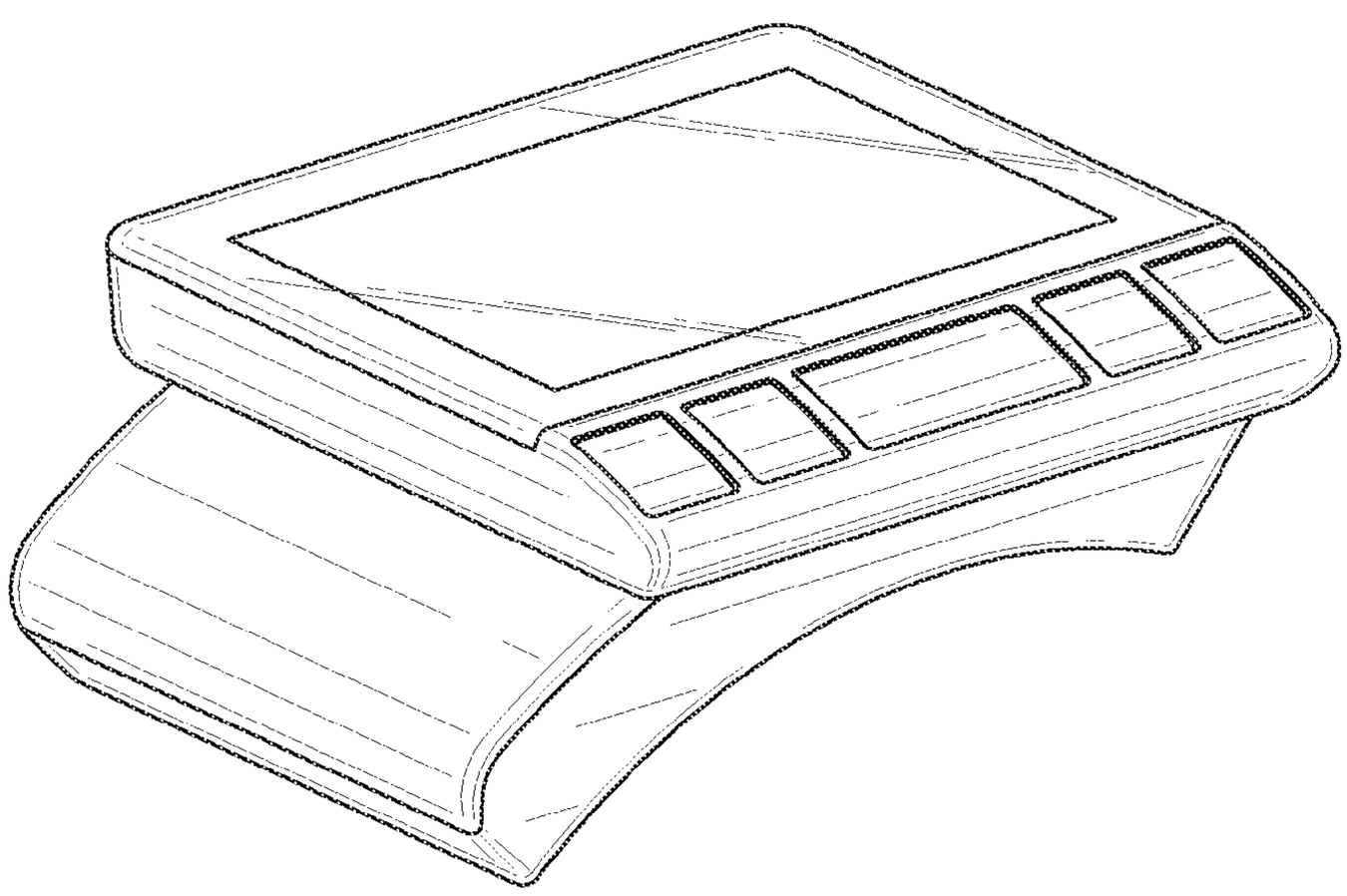

Fig. 1

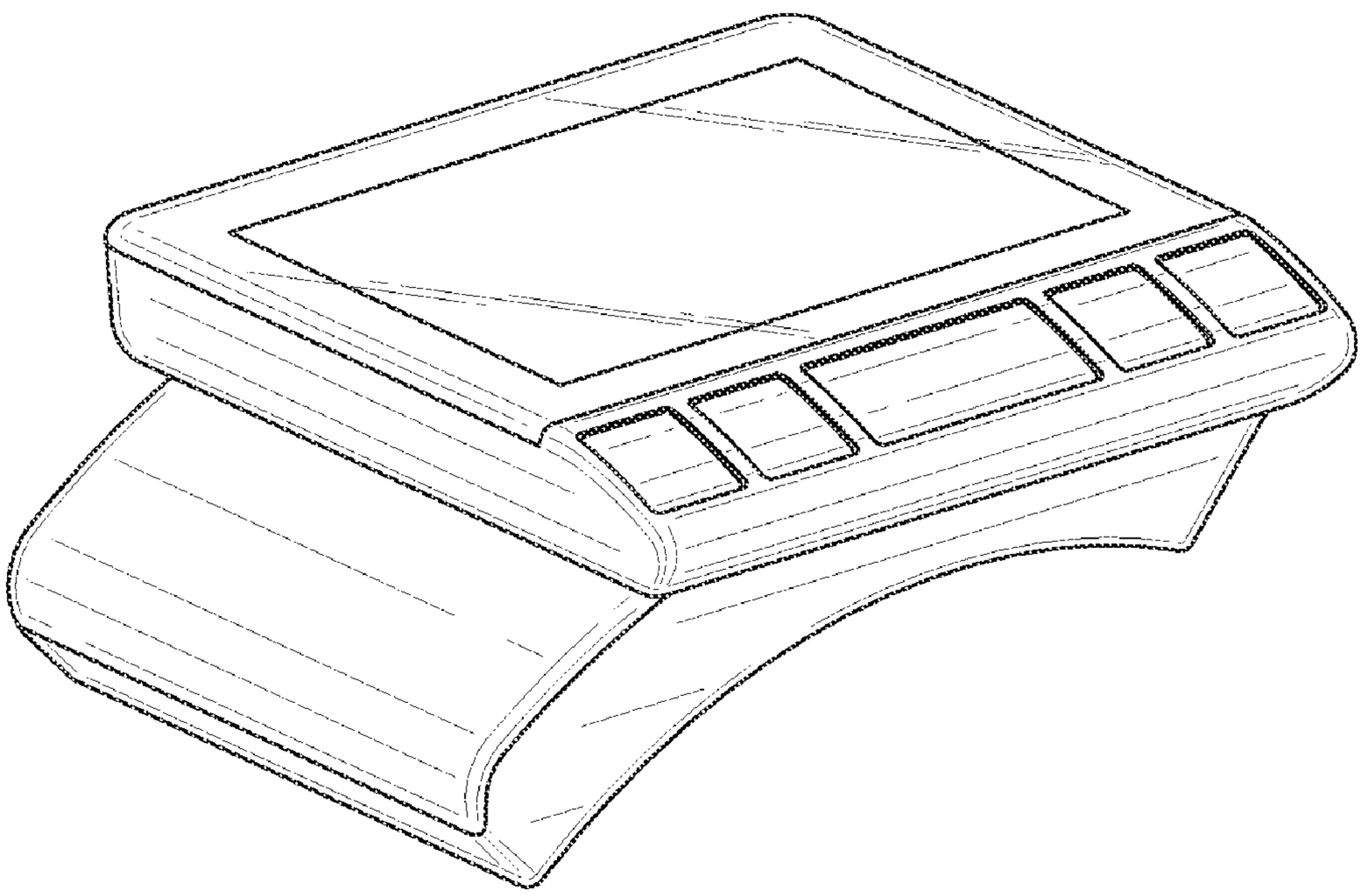

Fig.2

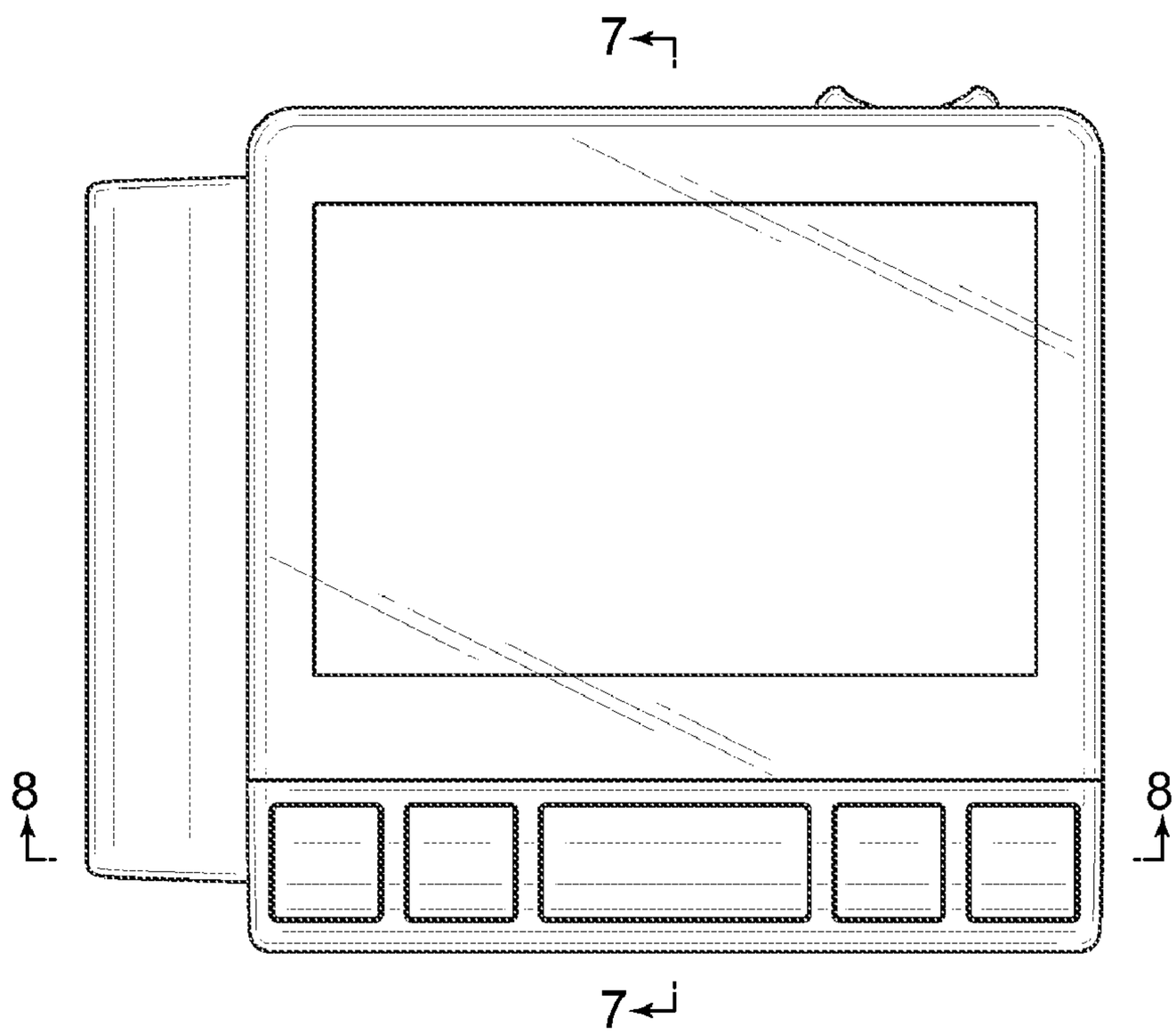

Fig.3

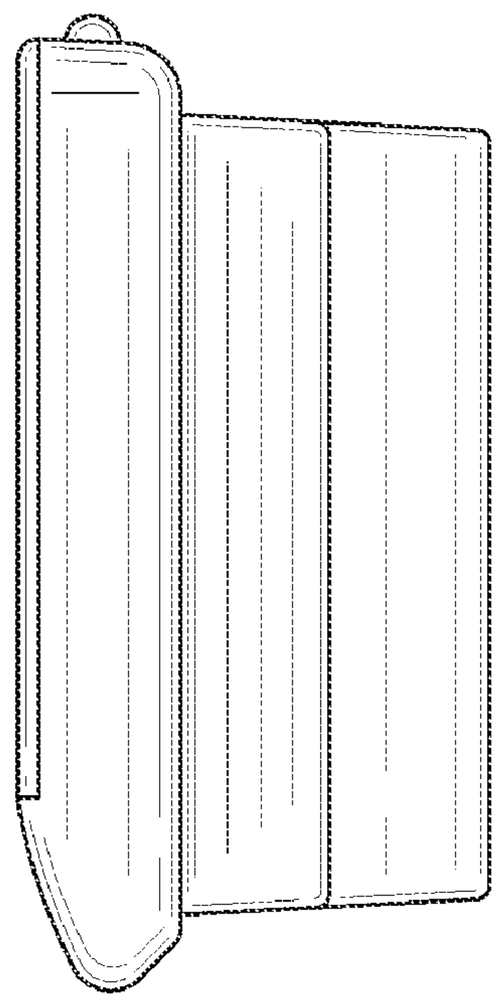

Fig.4

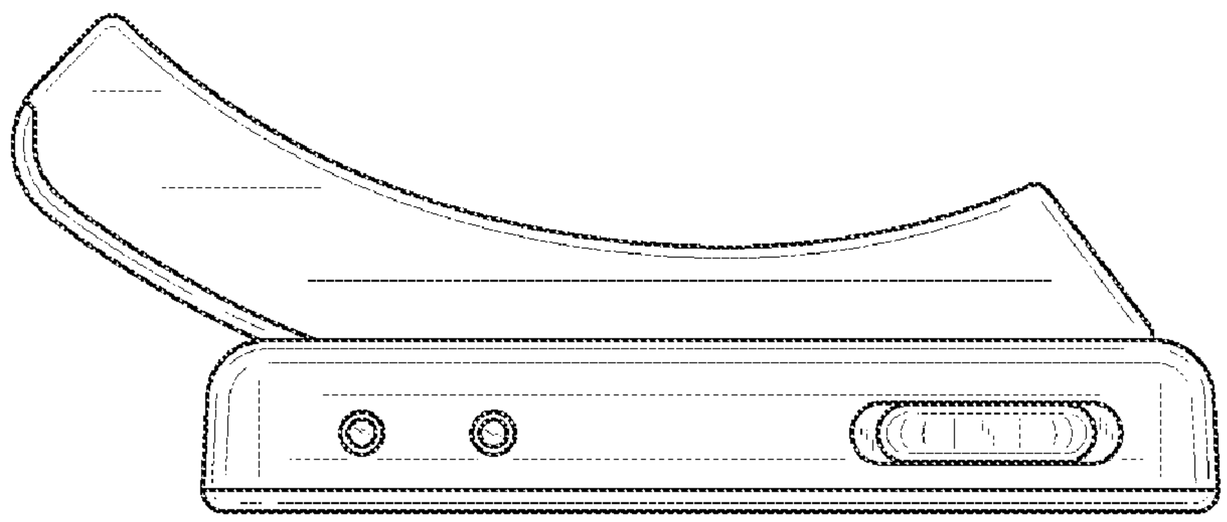

Fig.5

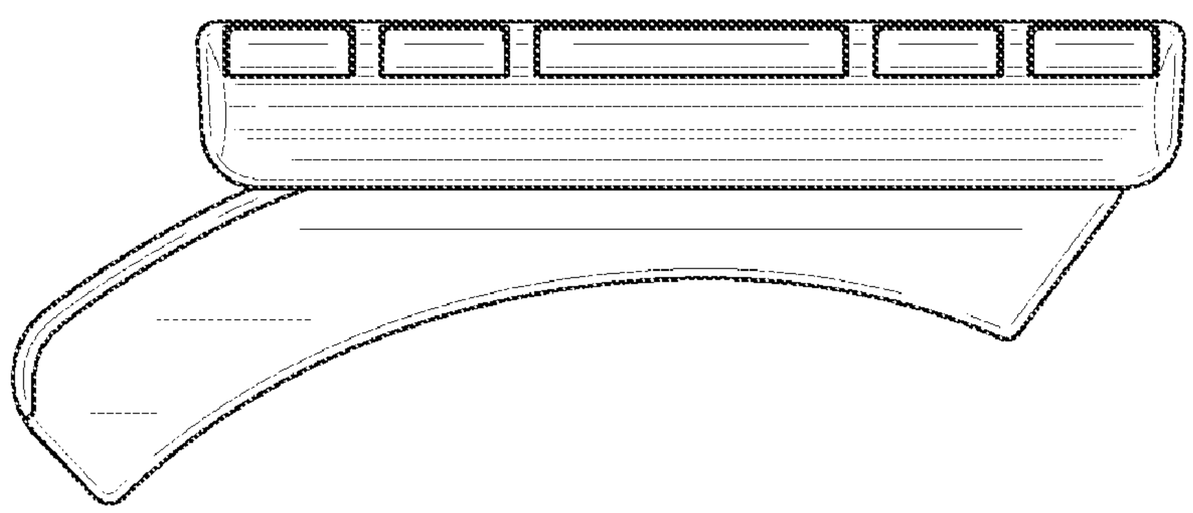

Fig.6

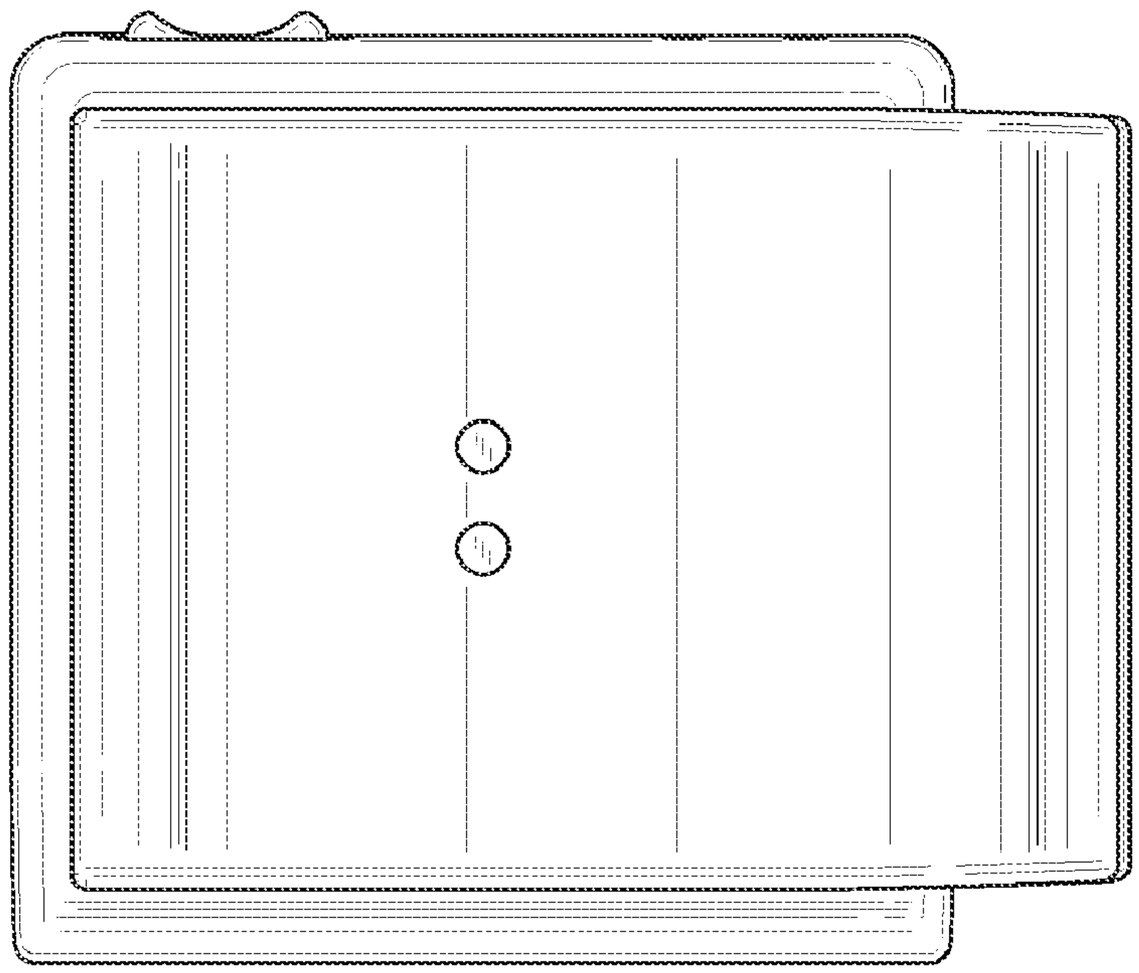

Fig. 7

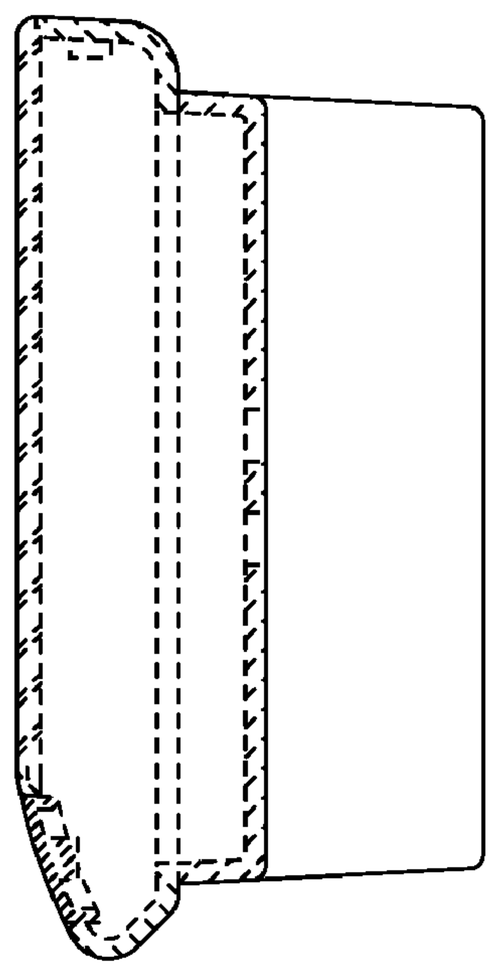

Fig.8

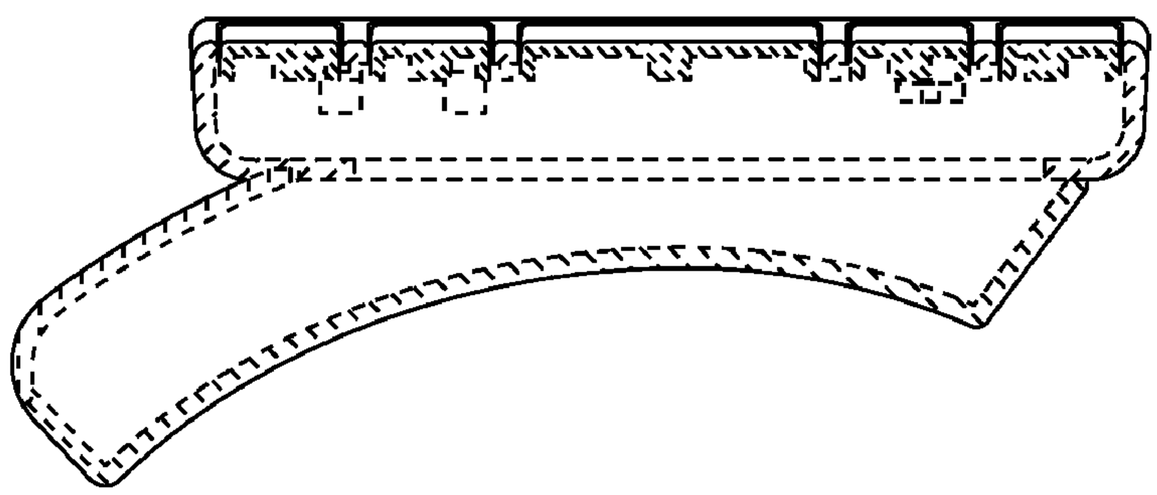

Fig.9

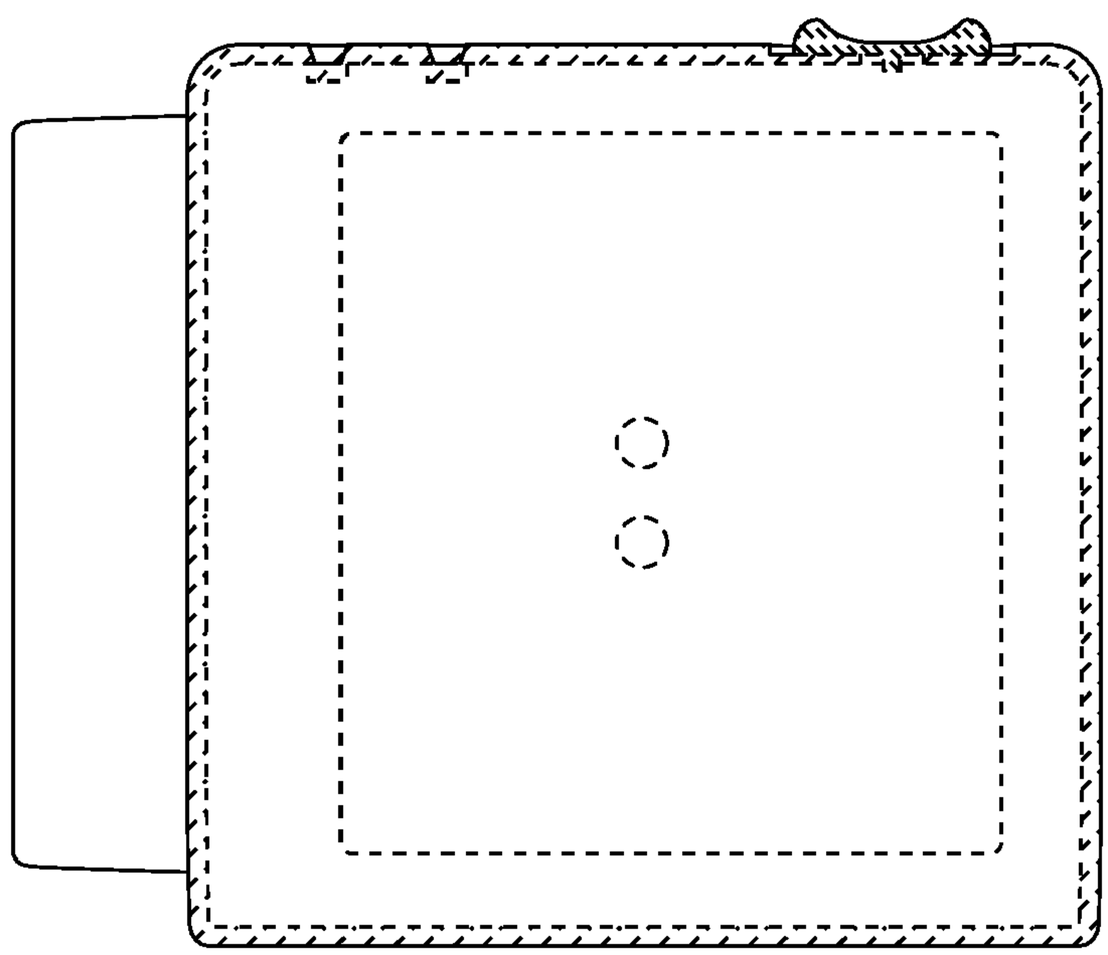

Fig.10

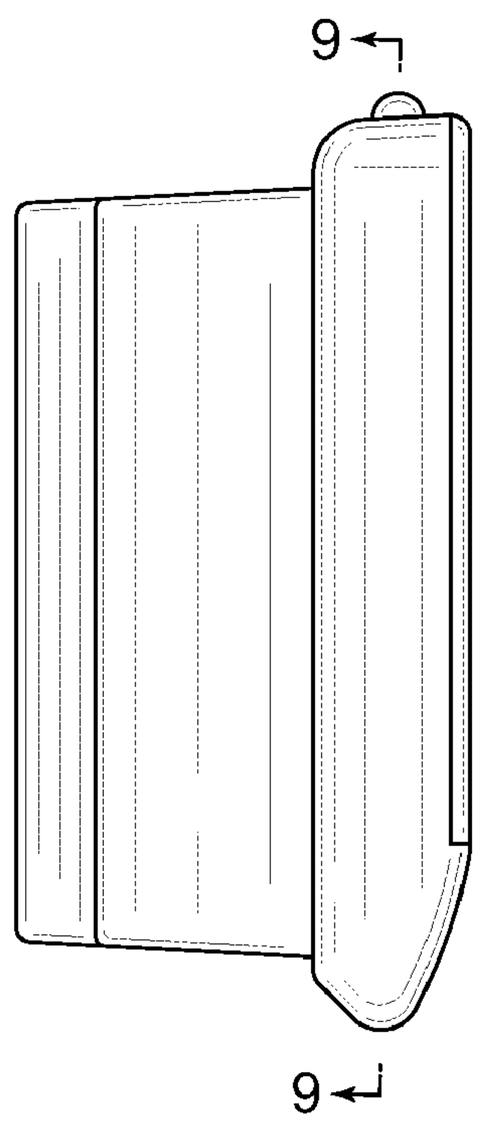

Fig. 11

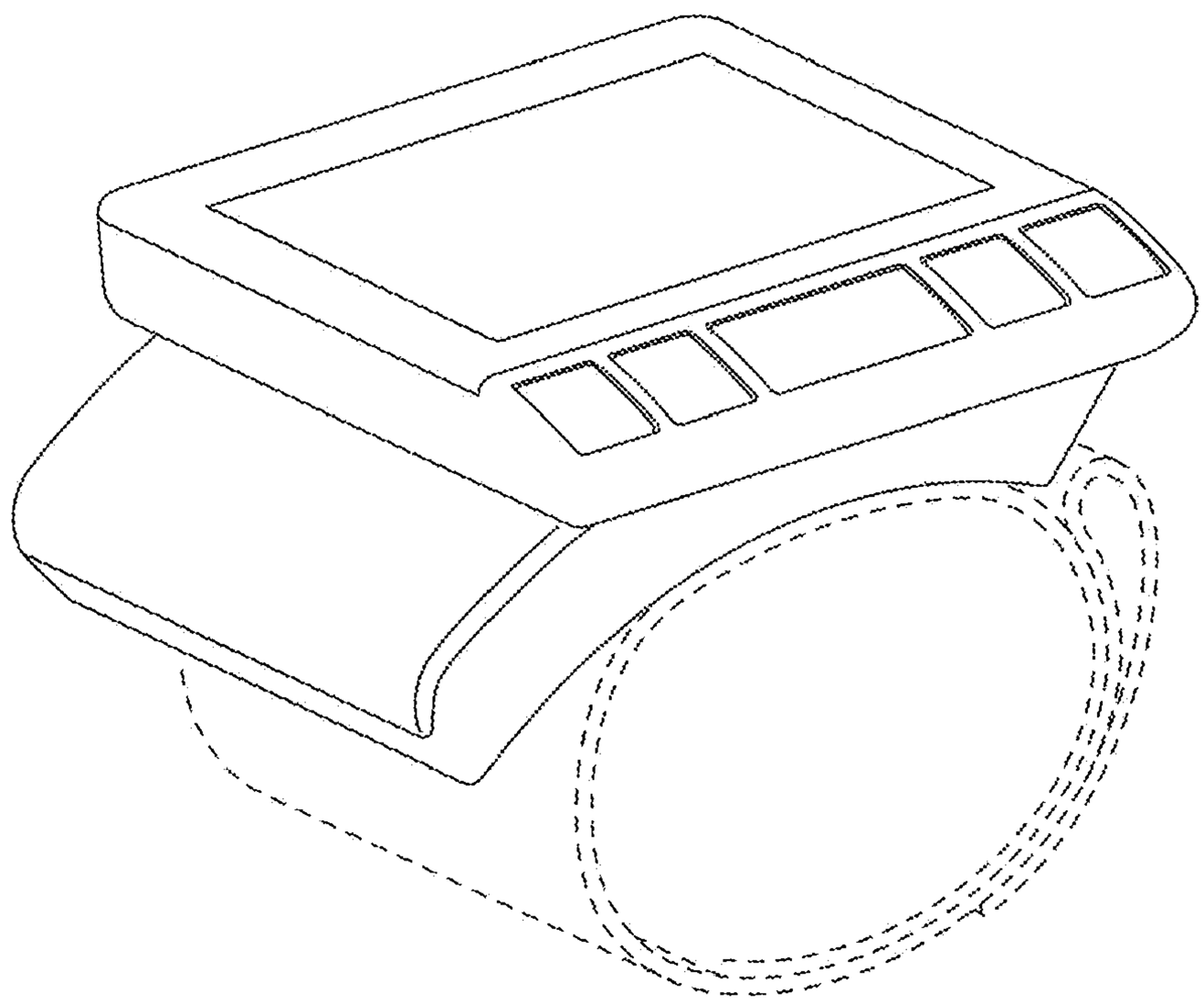
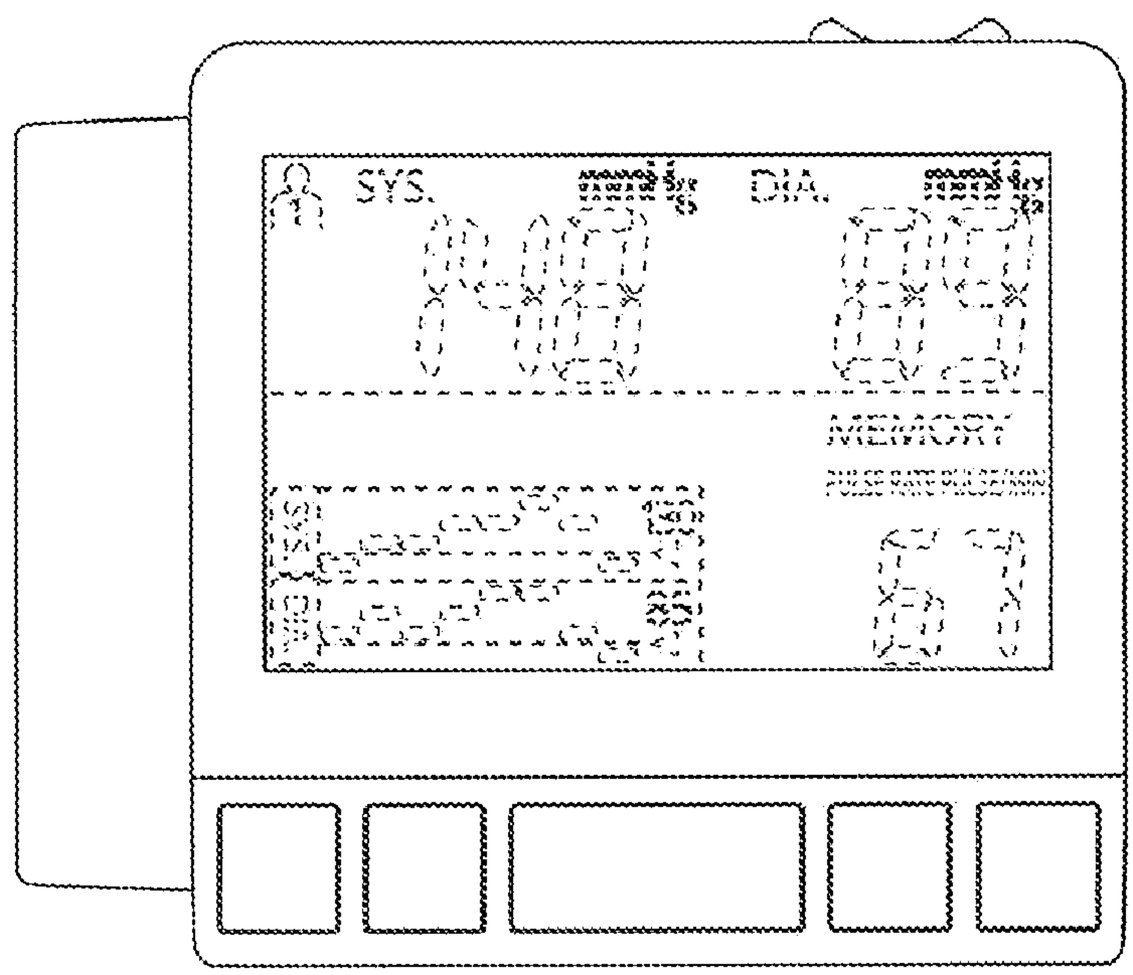
Fig. 12