US00D637145S

(12) United States Design Patent

Lippert et al.

(10) Patent No.: US D637,145 S

(45) Date of Patent: ** May 3, 2011

(54) **TIRE TREAD OF A VEHICLE TIRE**

(75) Inventors: **Frank Lippert**, Lehrte (DE); **Ralf Krieger**, Hanover (DE); **Bernd Zimmermann**, Lauenau (DE)

(73) Assignee: **Continental Aktiengesellschaft**, Hanover (DE)

(**) Term: **14 Years**

(21) Appl. No.: **29/338,500**

(22) Filed: **Jun. 12, 2009**

(30) **Foreign Application Priority Data**

Dec. 17, 2008 (EM) 001058846-0001

(51) **LOC (9) Cl.** **12-15**

(52) **U.S. Cl.** **D12/589**

(58) **Field of Classification Search** D12/568–603; 152/209.1, 201.8, 201.9, 201.12, 201.18, 152/201.25

See application file for complete search history.

(56) **References Cited**

U.S. PATENT DOCUMENTS

D58,764	S	*	8/1921	Keith	D12/572
D170,055	S	*	7/1953	Hawkinson	D12/589
D619,529	S	*	7/2010	Georges et al.	D12/590
2009/0229719	A1	*	9/2009	Simon et al.	152/209.1

* cited by examiner

Primary Examiner — Caron Veynar
Assistant Examiner — George D Kirschbaum
(74) *Attorney, Agent, or Firm* — Laurence A. Greenberg; Werner H. Stemer; Ralph E. Locher

(57) **CLAIM**

The ornamental design for a tire tread of a vehicle tire, as shown and described.

DESCRIPTION

FIG. **1** is a perspective view of the tire tread of a vehicle tire, showing my new design;
FIG. **2** is a side elevational view thereof; and,
FIG. **3** is a enlarged partial front view thereof.
The tire tread of a vehicle tire pattern is repeated uniformly around the circumference of the tire structure. The dash-dot lines showing the boundaries of the claim and the broken lines depicting environmental structure (the sidewall of the tire) do not form part of the claim.

1 Claim, 3 Drawing Sheets

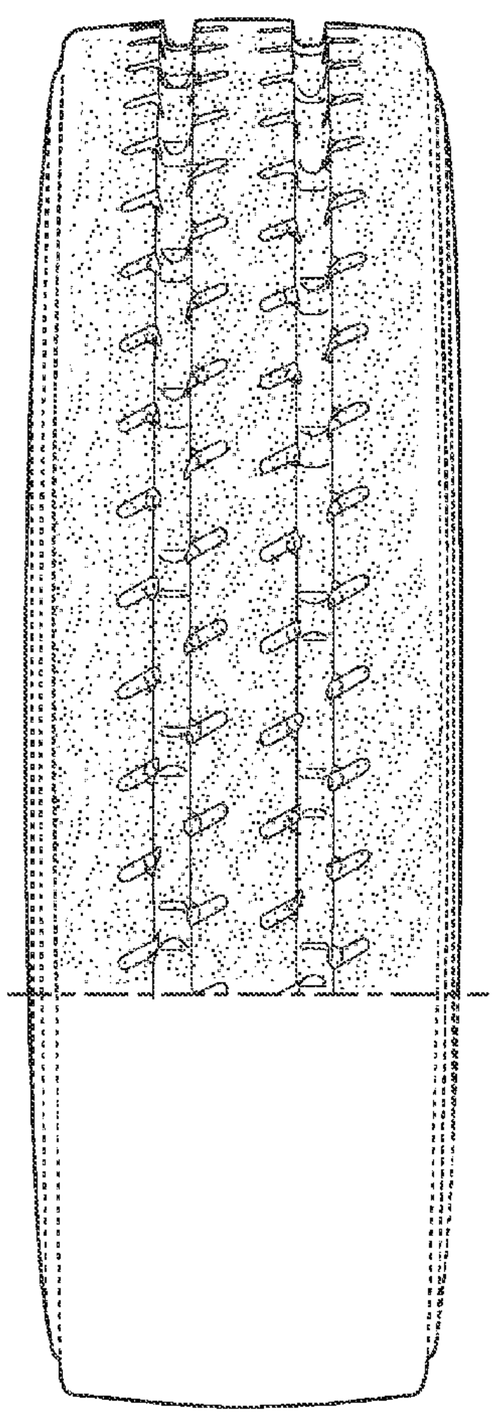

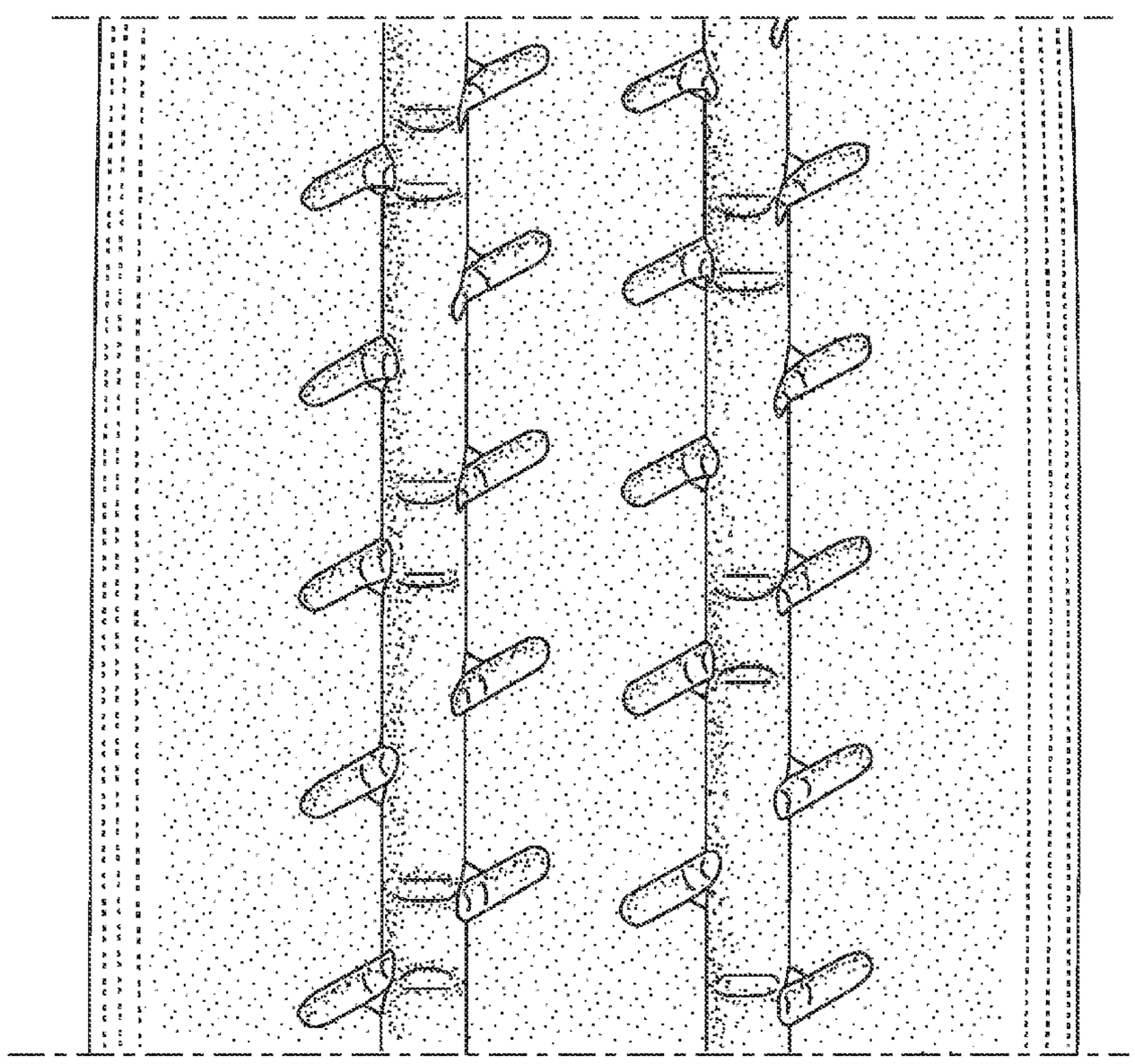

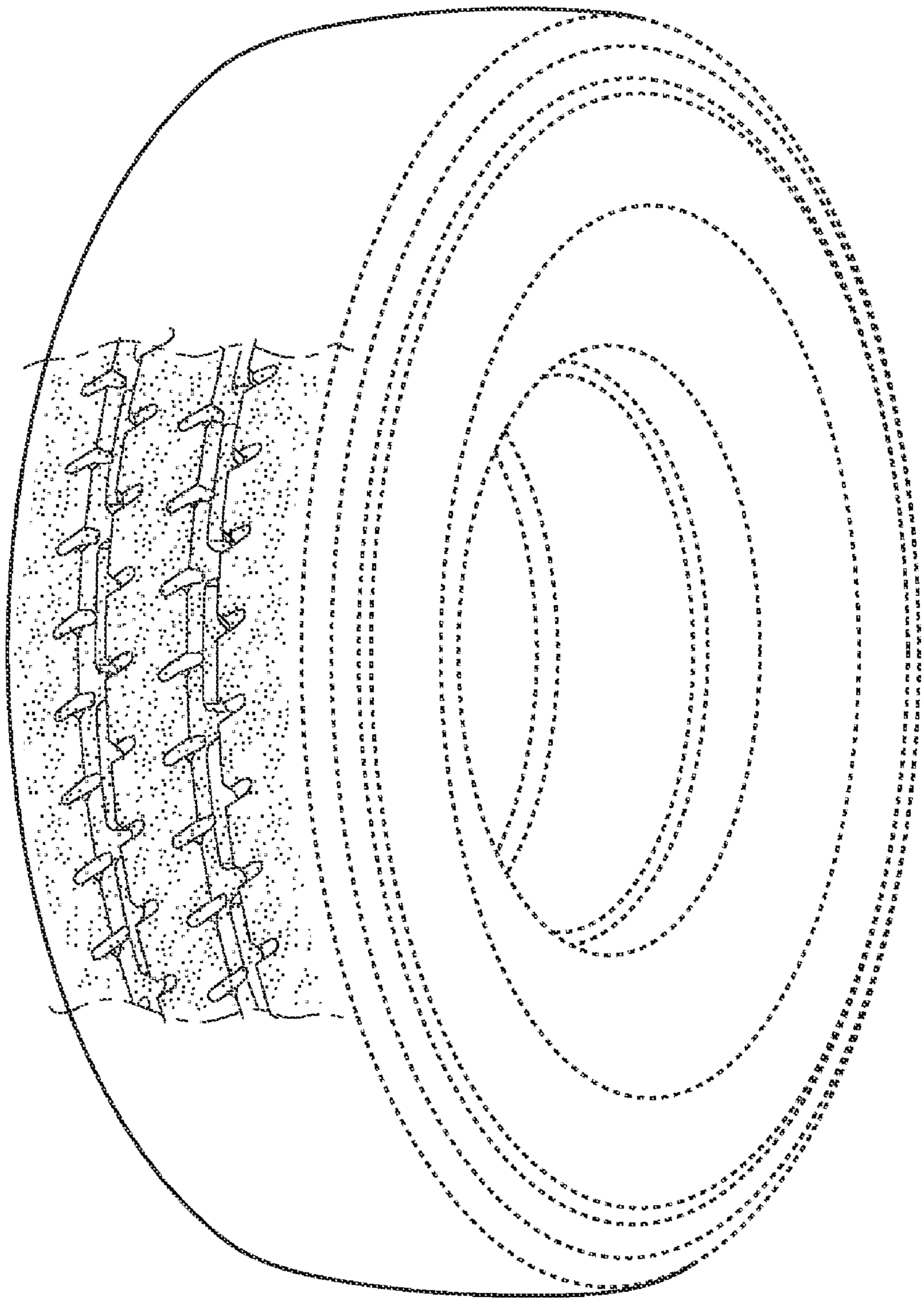

FIG. 1

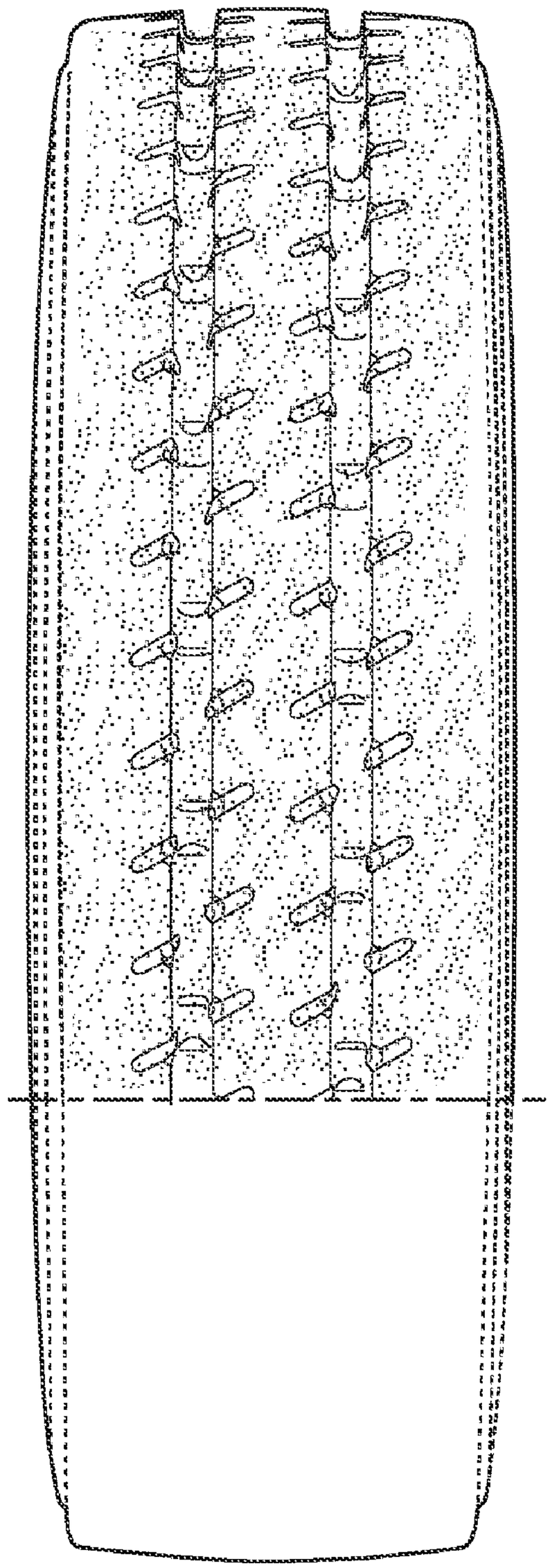

FIG. 2

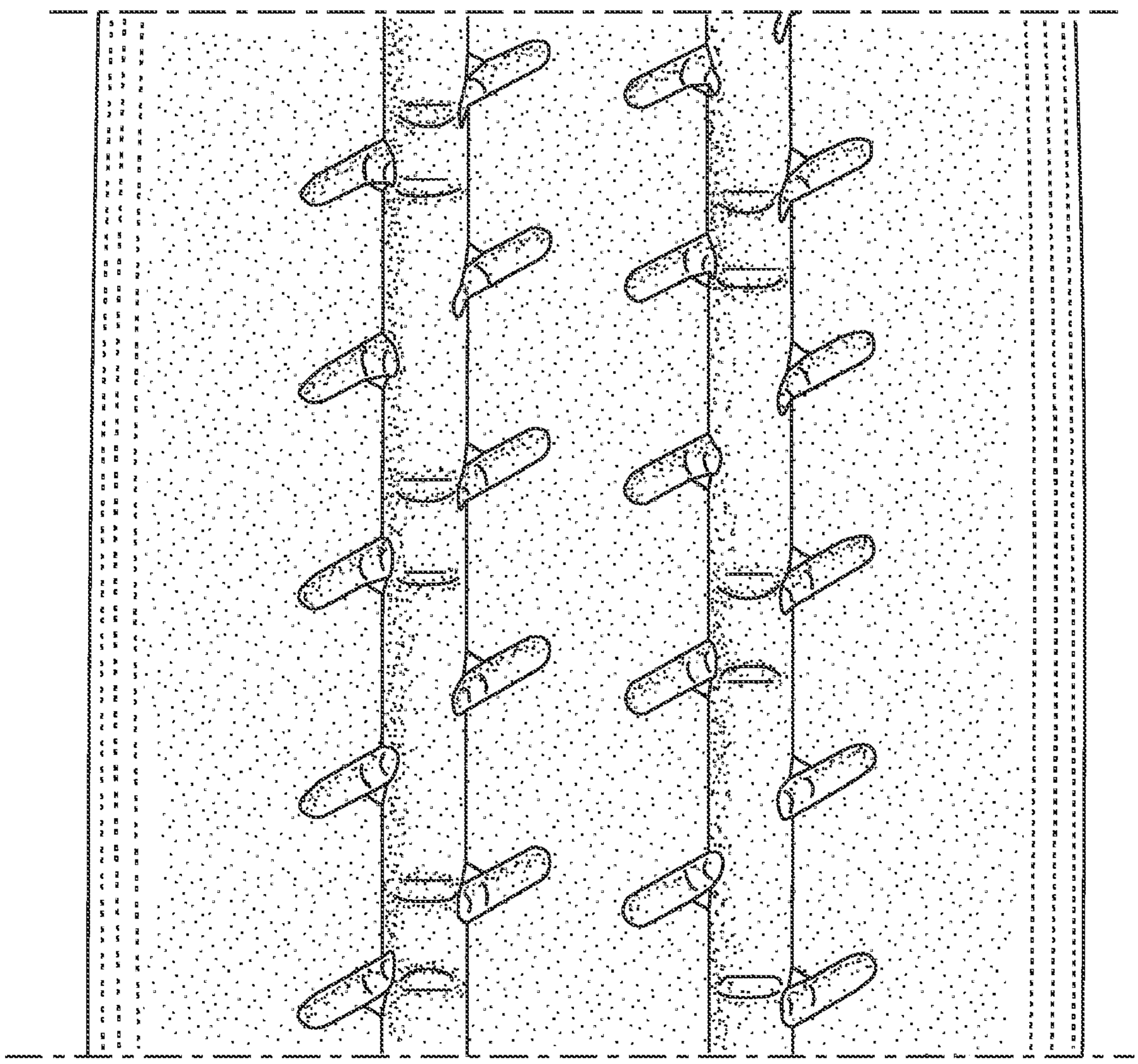

FIG. 3