US00D635198S

(12) United States Design Patent

Antonopoulos et al.

(10) Patent No.: US D635,198 S
(45) Date of Patent: ** Mar. 29, 2011

(54) **LOTTERY TERMINAL**

(75) Inventors: **Konstantinos Antonopoulos**, Athens (GR); **Georgios Plakas**, Athens (GR); **Konstantinos Vrahatis**, Athens (GR); **Georgios Kolios**, Athens (GR); **Stavros Liapis**, Athens (GR)

(73) Assignee: **Intralot S.A.**, Athens (GR)

(**) Term: **14 Years**

(21) Appl. No.: **29/368,551**

(22) Filed: **Aug. 25, 2010**

Related U.S. Application Data

(63) Continuation of application No. 11/750,168, filed on May 17, 2007.

(51) **LOC (9) Cl.** **21-03**
(52) **U.S. Cl.** **D21/369**
(58) **Field of Classification Search** D21/329–330, D21/369–371, 385; 463/17, 20, 26, 46–47
See application file for complete search history.

(56) **References Cited**

U.S. PATENT DOCUMENTS

5,216,595	A	6/1993	Protheroe
5,239,165	A	8/1993	Novak
6,053,405	A	4/2000	Irwin, Jr. et al.
6,267,670	B1	7/2001	Walker et al.
6,379,742	B1	4/2002	Behm et al.
6,435,408	B1	8/2002	Irwin, Jr. et al.
6,491,215	B1	12/2002	Irwin, Jr. et al.
6,582,304	B2	6/2003	Walker et al.
6,776,337	B2	8/2004	Irwin, Jr. et al.
6,875,105	B1	4/2005	Behm et al.
6,887,153	B2	5/2005	Walker et al.
D507,023	S	7/2005	Simonetti et al.
7,032,793	B2	4/2006	Roberts et al.
D540,398	S	4/2007	Gadda et al.
D607,947	S	1/2010	Antonopoulos et al.
2001/0006181	A1	7/2001	Roberts et al.
2001/0016514	A1	8/2001	Walker et al.

(Continued)

FOREIGN PATENT DOCUMENTS

EP	0450520	10/1991

(Continued)

OTHER PUBLICATIONS

U.S. Appl. No. 29/282,532, filed Feb. 22, 2007.

(Continued)

Primary Examiner — Sandra Morris
(74) *Attorney, Agent, or Firm* — Greenberg Traurig, LLP

(57) **CLAIM**

The ornamental design for the lottery terminal, as shown and described.

DESCRIPTION

FIG. **1** is a perspective front-top view of the lottery terminal, in accordance with our new design;
FIG. **2** is a top view of the lottery terminal, in accordance with our new design;
FIG. **3** is a right side view of the lottery terminal, in accordance with our new design;
FIG. **4** is a front view of the lottery terminal, in accordance with our new design;
FIG. **5** is a back view of the lottery terminal, in accordance with our new design; and
FIG. **6** is a left side view of the lottery terminal, in accordance with our new design.
FIG. **7** is a bottom view of the lottery terminal, in accordance with our new design;
FIG. **8** is another perspective front-top view of the lottery terminal, in accordance with our new design;
FIG. **9** is yet another perspective front-top view of the lottery terminal, in accordance with our new design; and,
FIG. **10** is yet another perspective front-top view of the lottery terminal, in accordance with our new design.
The broken lines are for illustrative purposes only, and form no part of the claimed design.

1 Claim, 10 Drawing Sheets

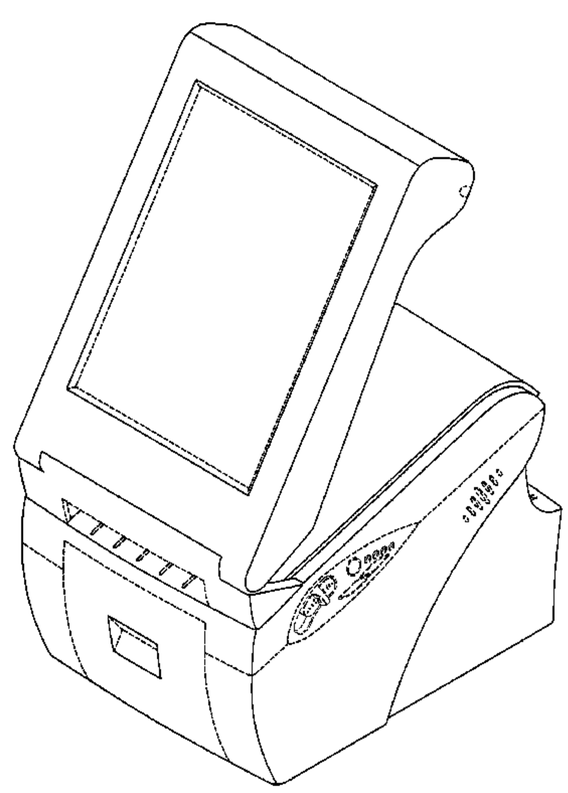

U.S. PATENT DOCUMENTS

2001/0034263	A1	10/2001	Roberts
2001/0048013	A1	12/2001	Roberts et al.
2002/0119817	A1	8/2002	Behm et al.
2003/0042306	A1	3/2003	Irwin, Jr. et al.
2004/0053011	A1	3/2004	Behm et al.
2004/0095723	A1	5/2004	Tsai et al.
2005/0156024	A1	7/2005	Ichikawa et al.
2005/0170880	A1	8/2005	Walker et al.
2005/0190533	A1	9/2005	Hultzman et al.
2005/0233797	A1	10/2005	Gilmore et al.
2006/0056155	A1	3/2006	Lee
2006/0081674	A1	4/2006	Roberts et al.
2006/0092612	A1	5/2006	Inoue
2006/0183554	A1	8/2006	Piazzai et al.
2006/0293783	A1	12/2006	Hand et al.
2008/0182639	A1	7/2008	Antonopoulos et al.

FOREIGN PATENT DOCUMENTS

EP	1441315	7/2004
GB	2378303	2/2003
WO	2005081887	9/2005

OTHER PUBLICATIONS

"Intralot microLOT. Size matters. So does performance", 1 pg.
Greek Search Report; 20070100053; Jan. 4, 2008, 1 pg.
www.lotteryinsider.com article dated Mar. 7, 2006, Intralot Lottery Terminal.

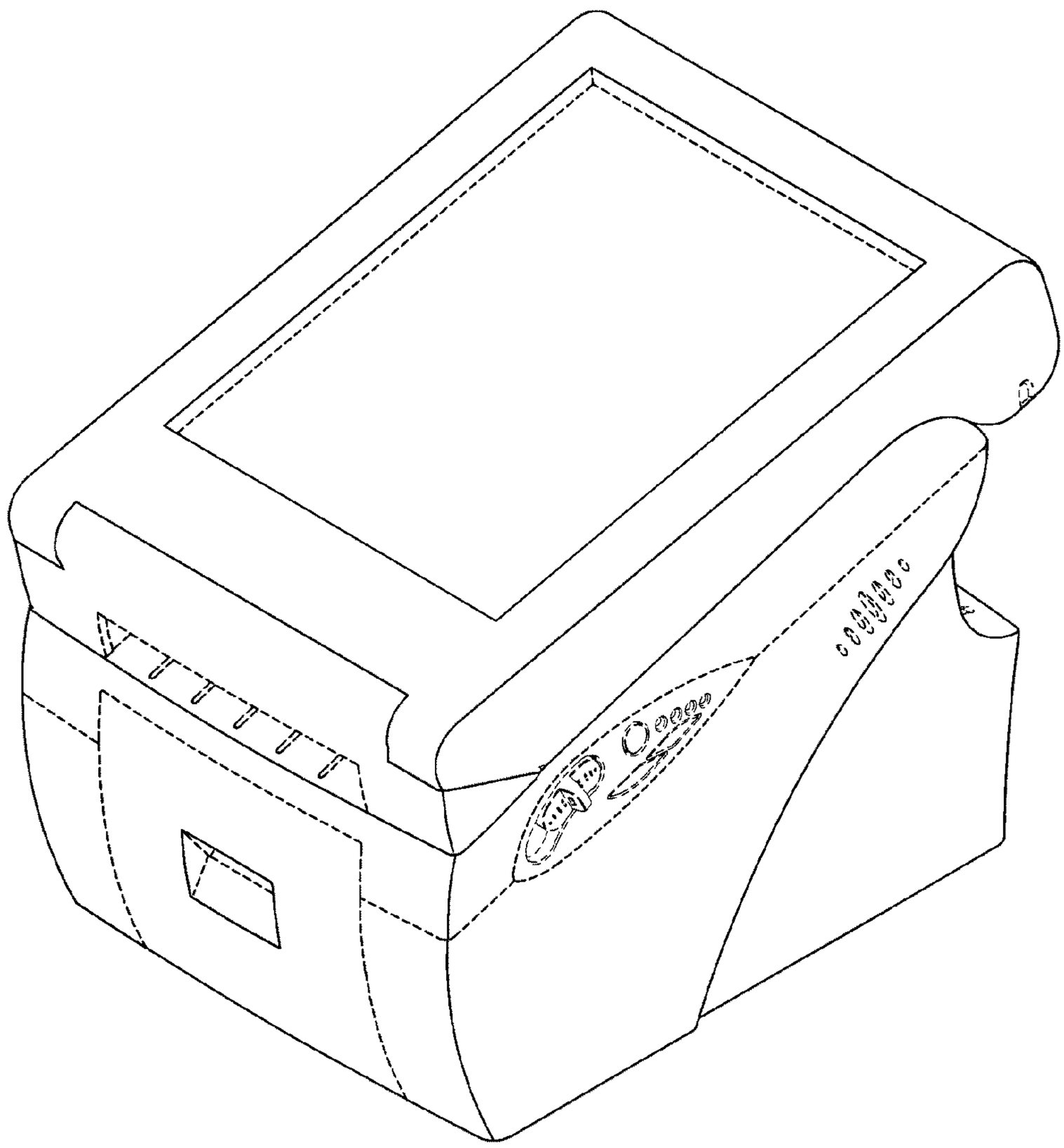

FIG. 1

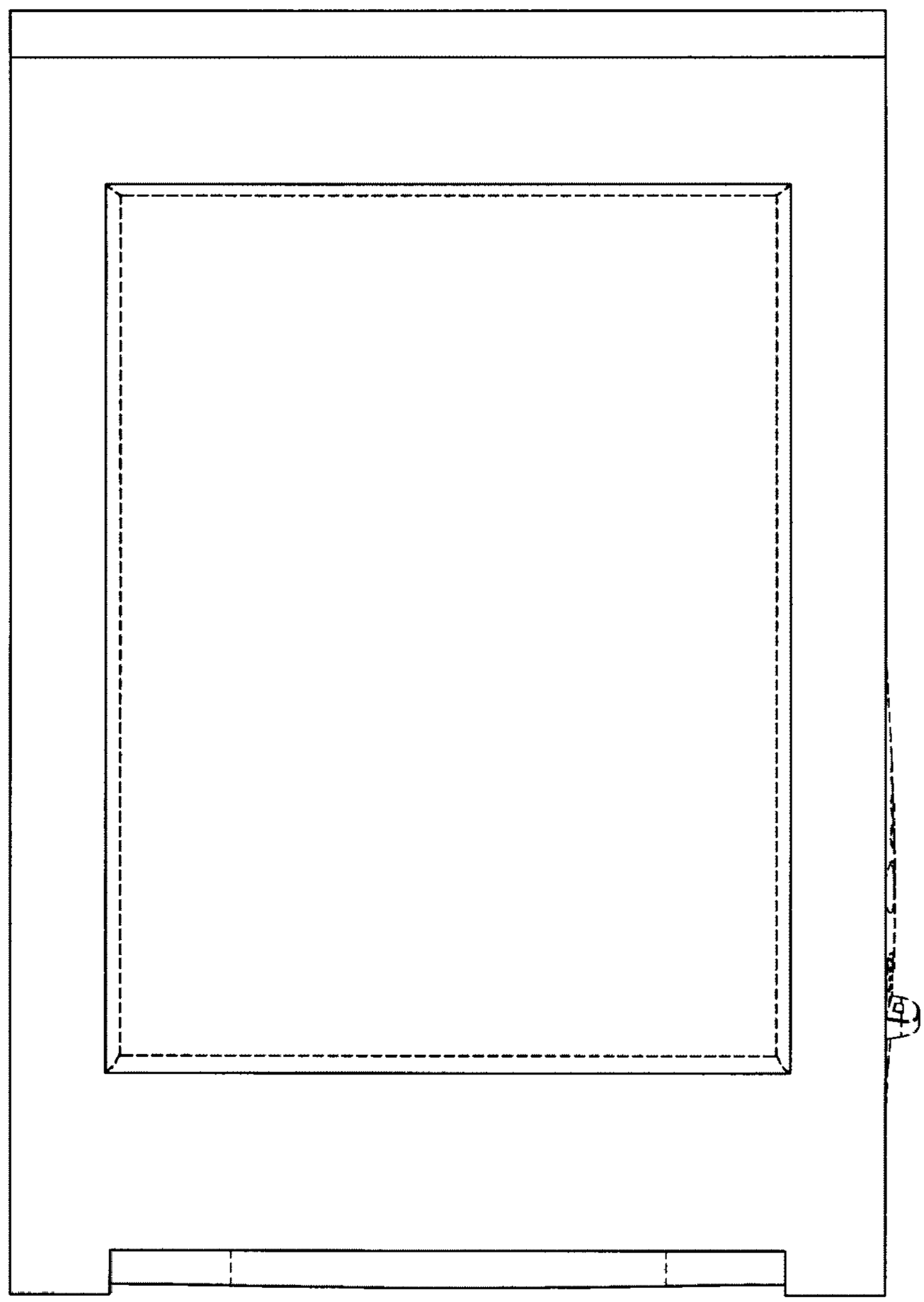

FIG.2

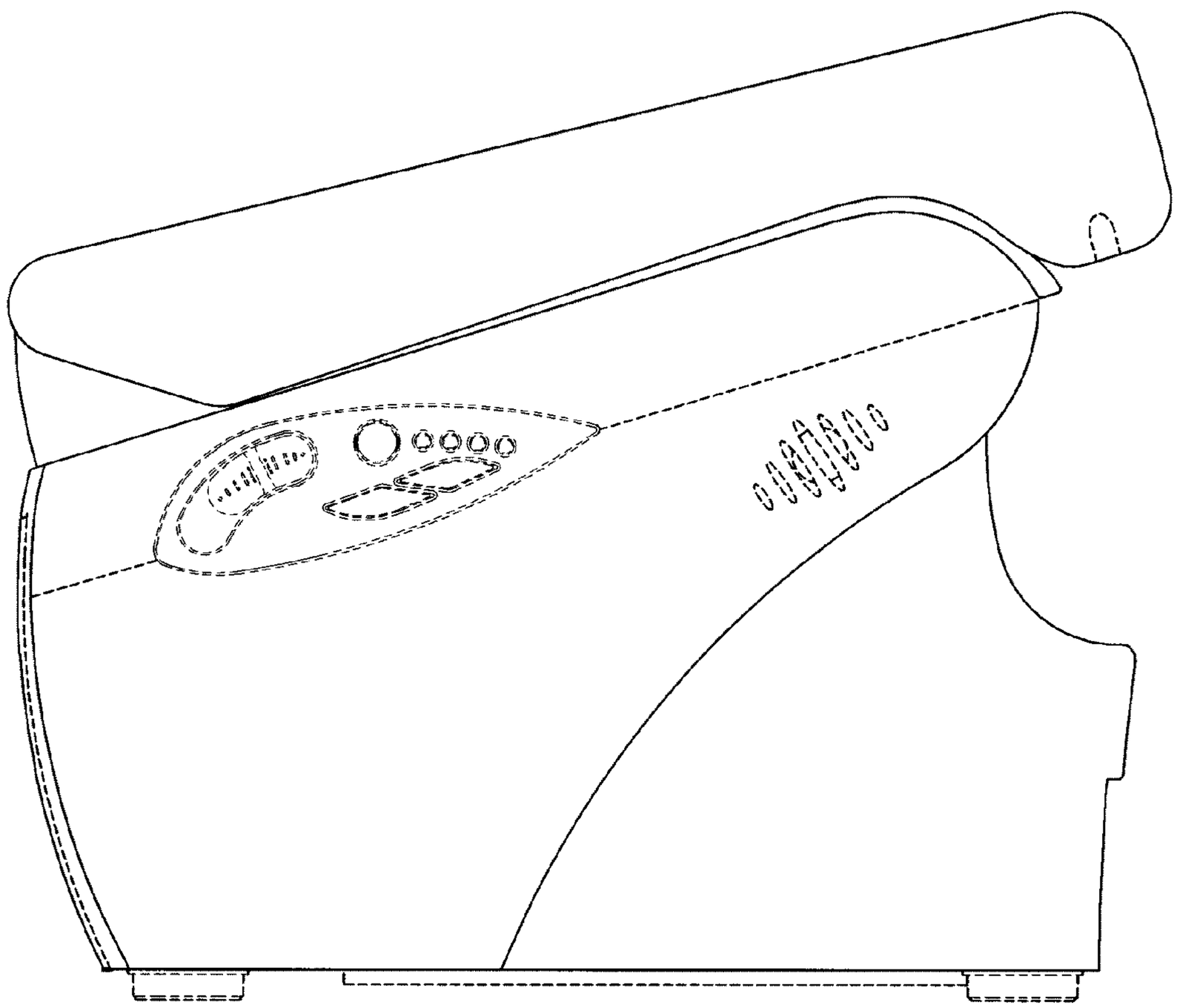

FIG.3

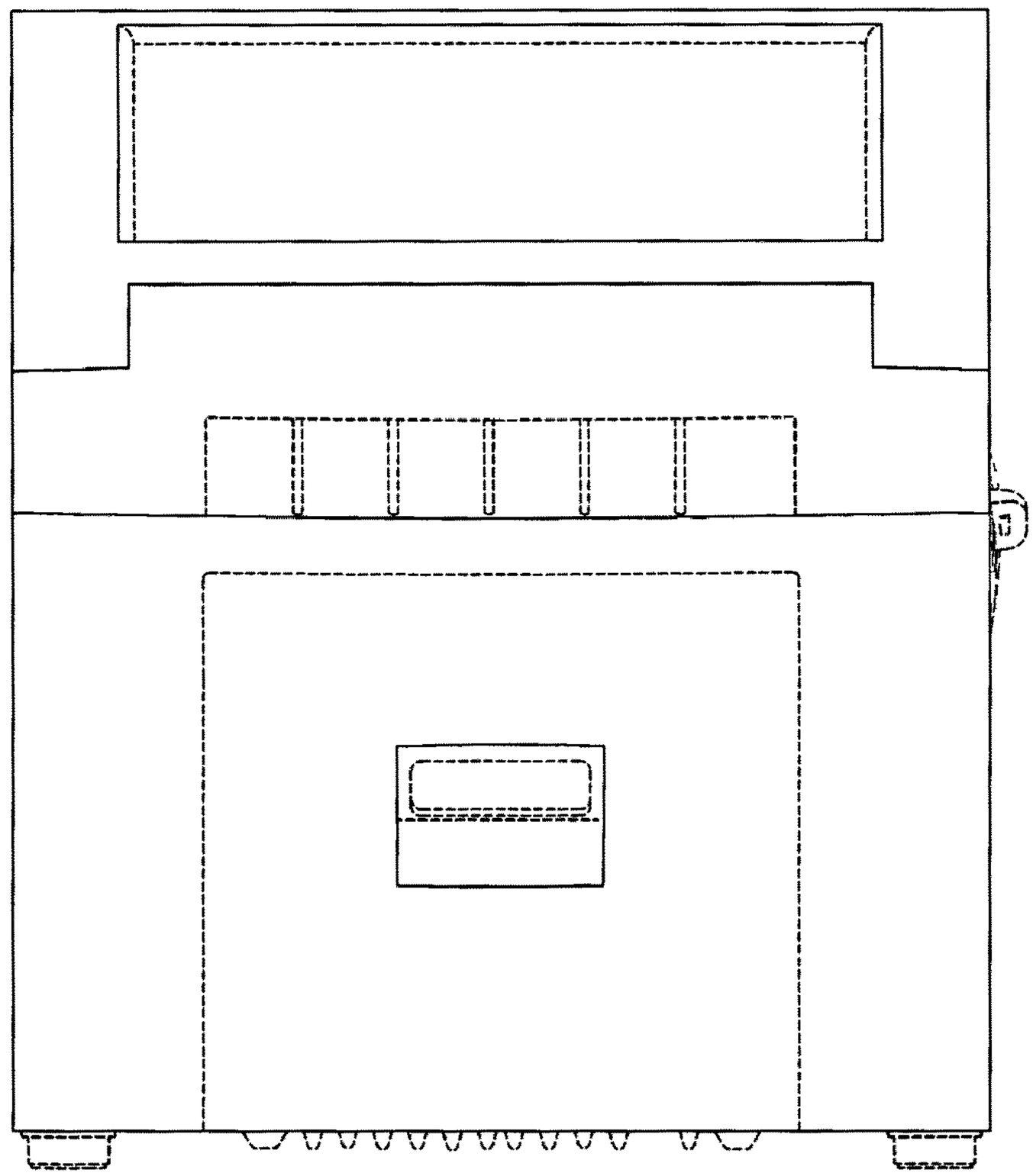

FIG.4

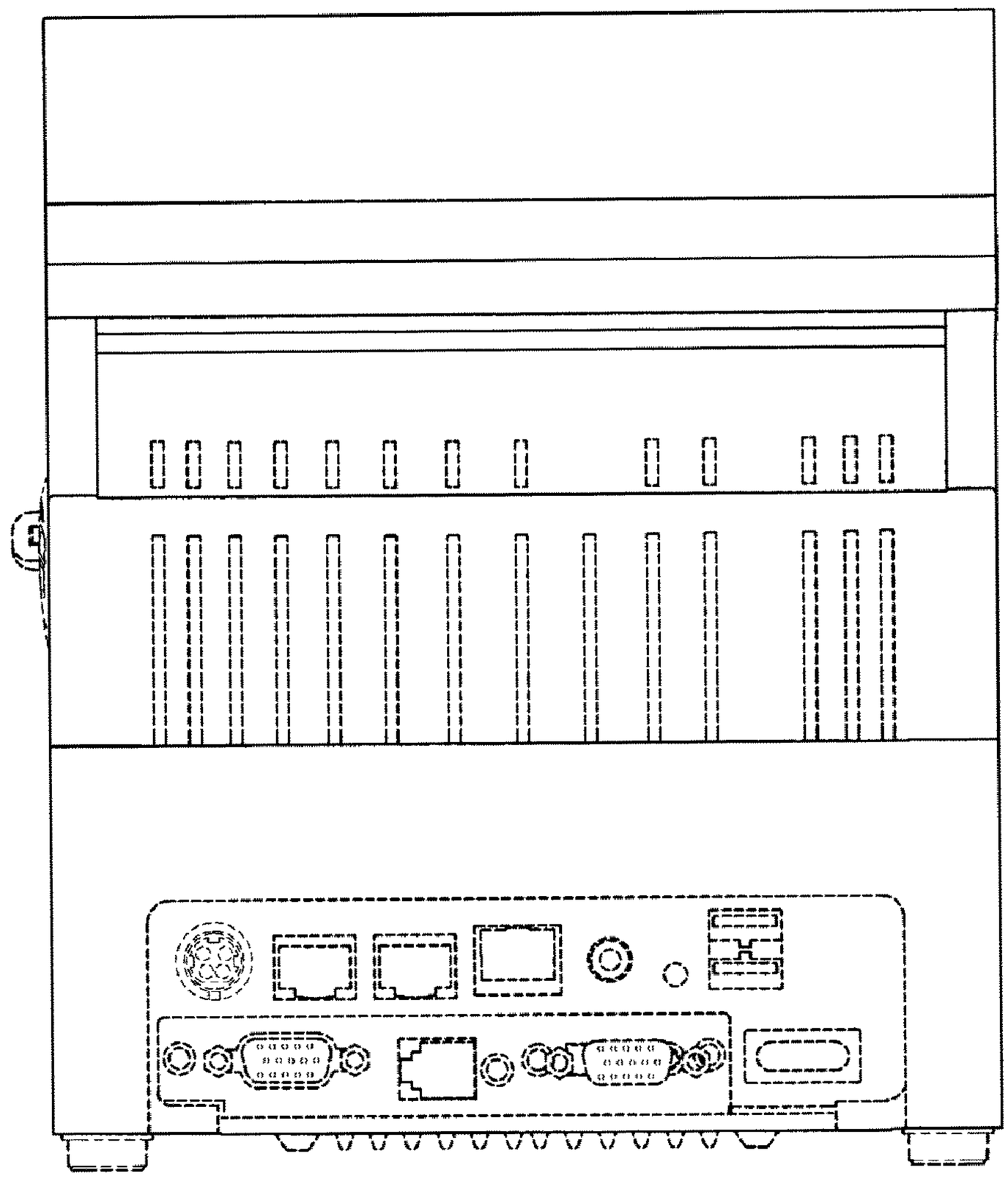

FIG.5

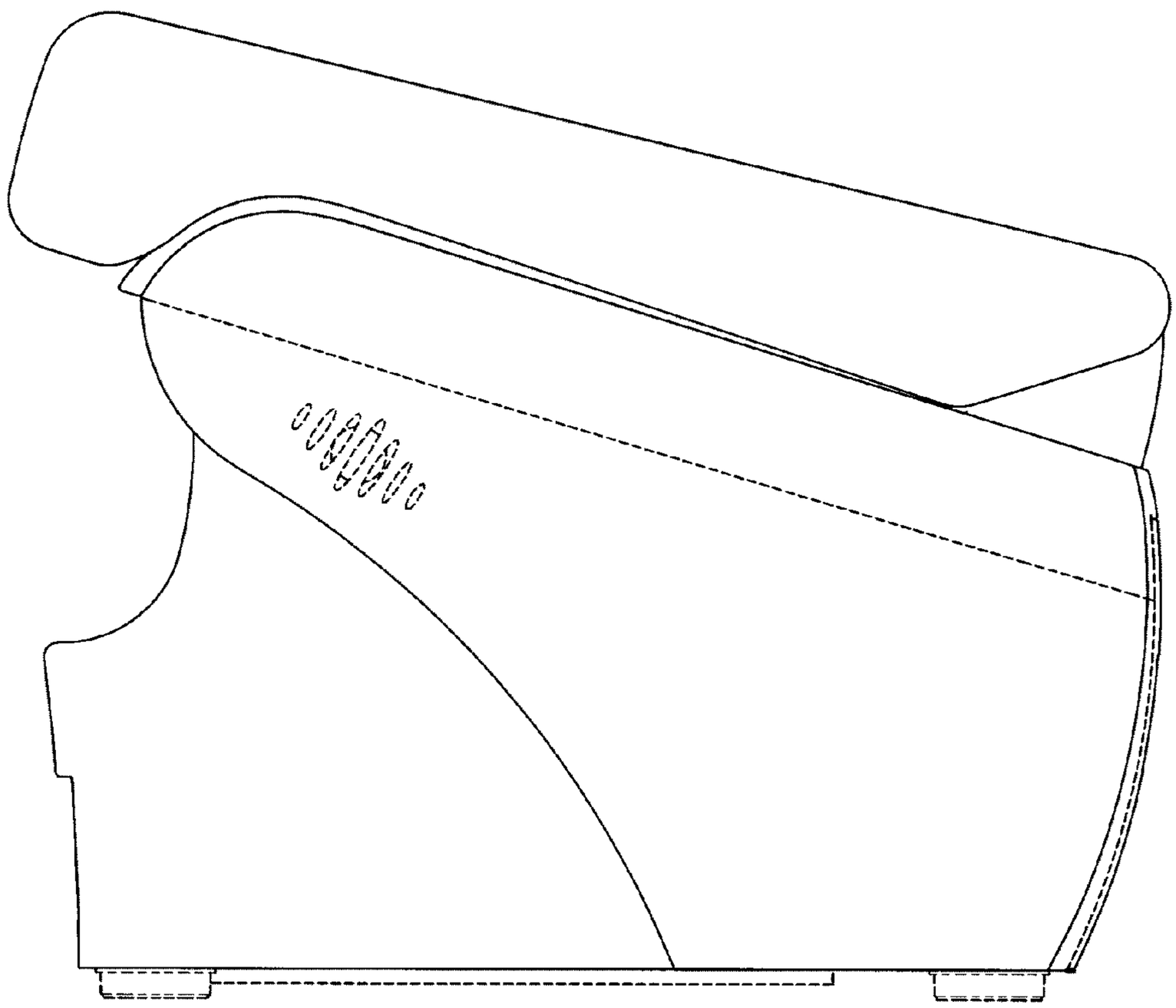

FIG.6

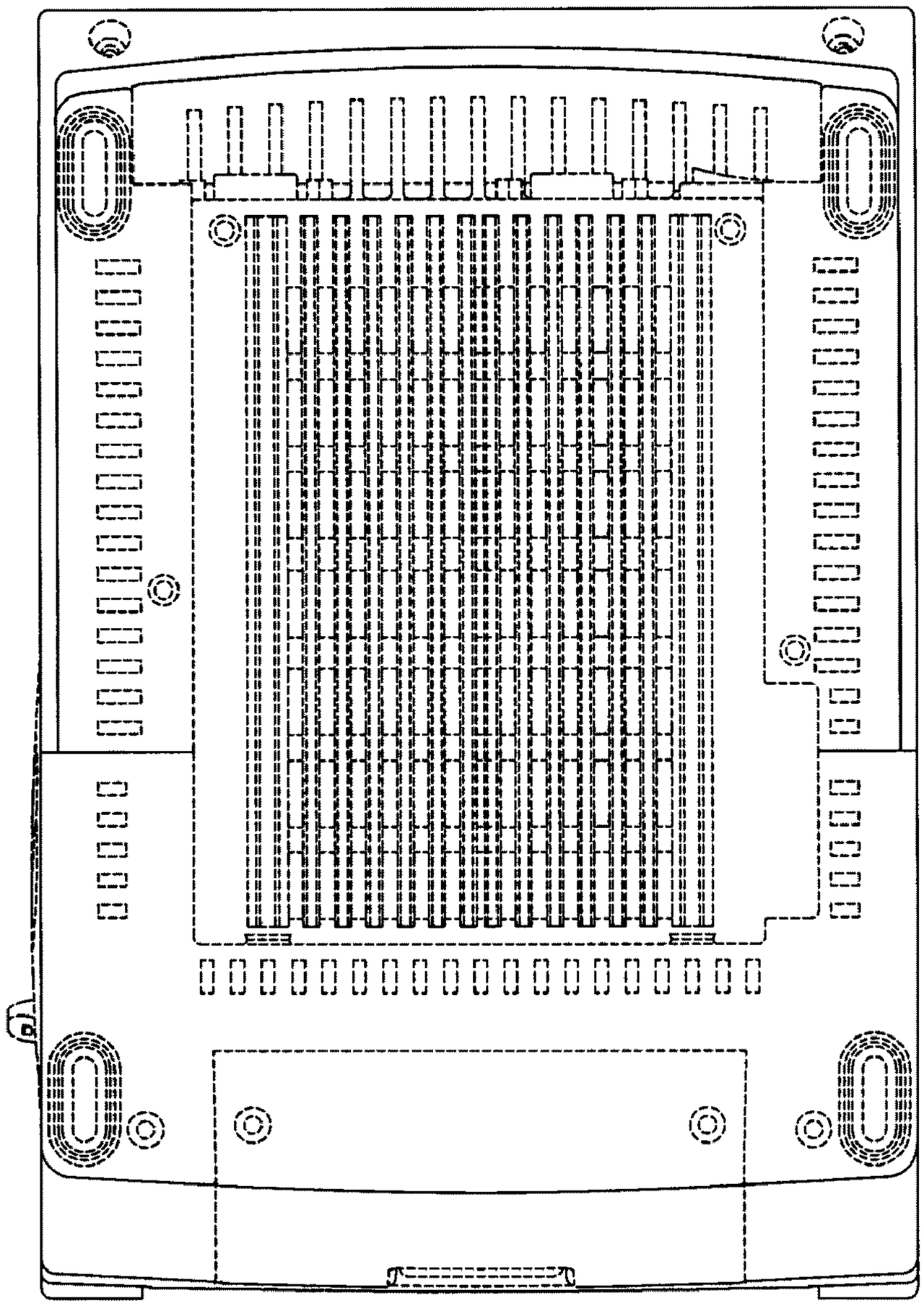

FIG.7

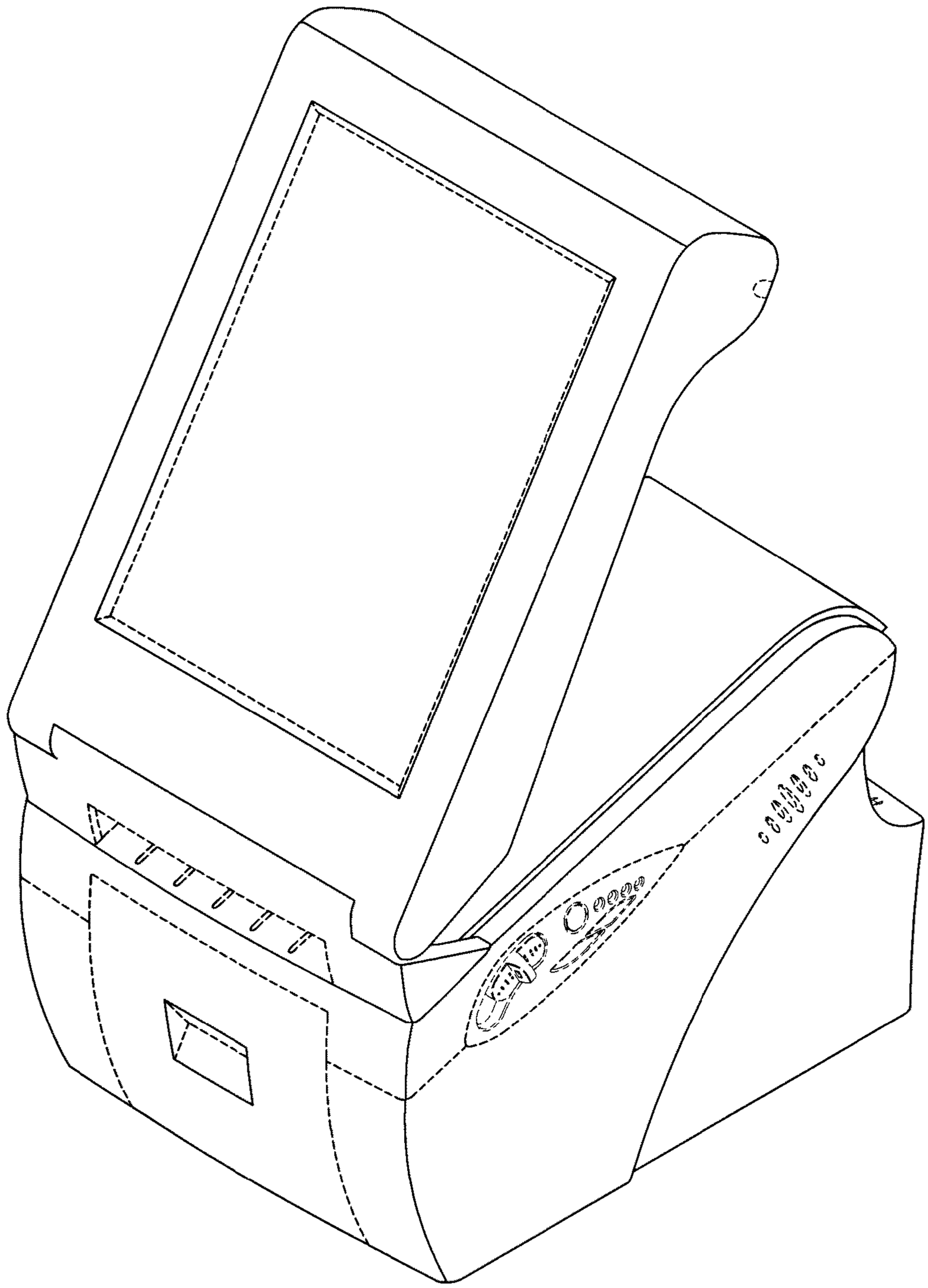

FIG.8

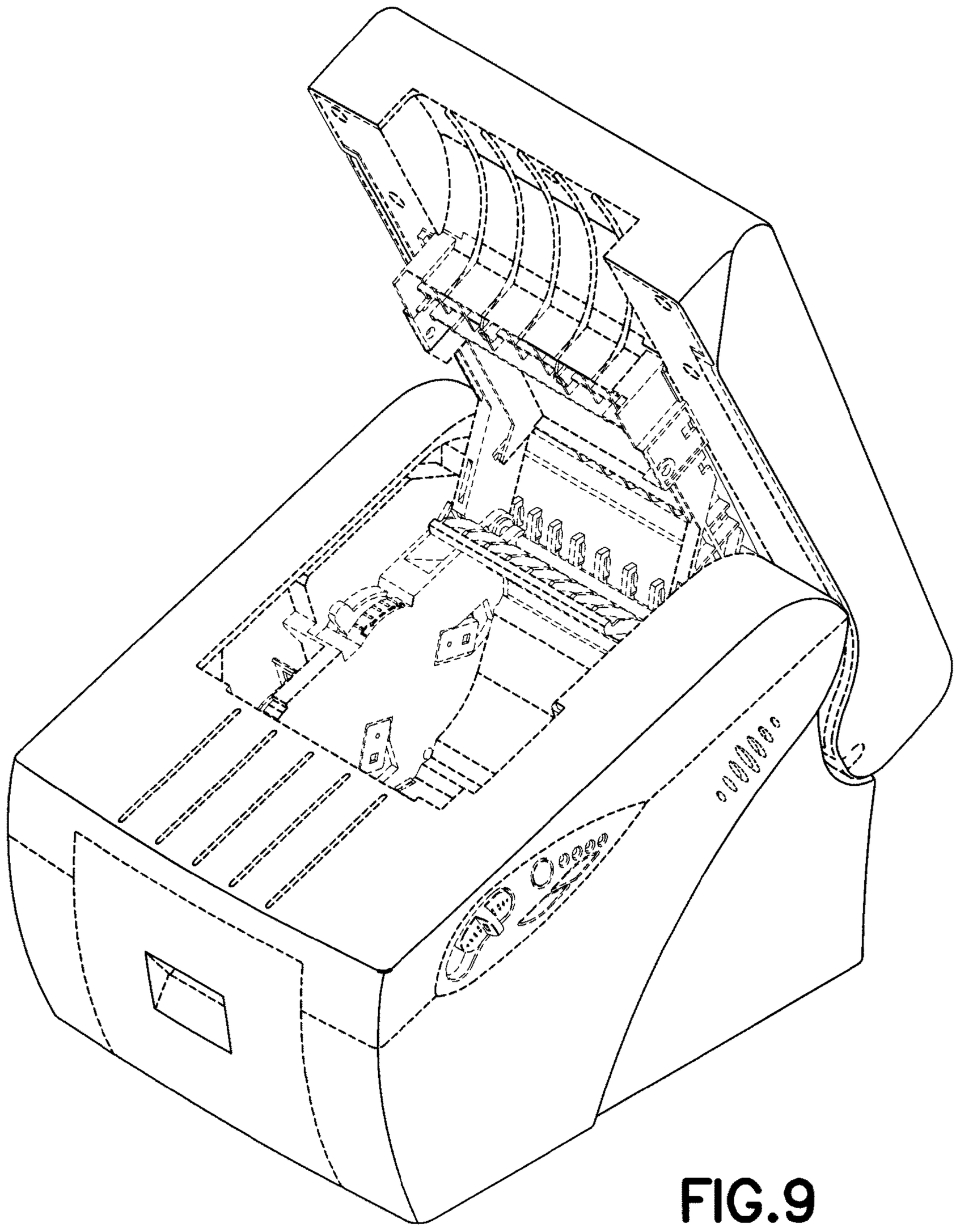

FIG.9

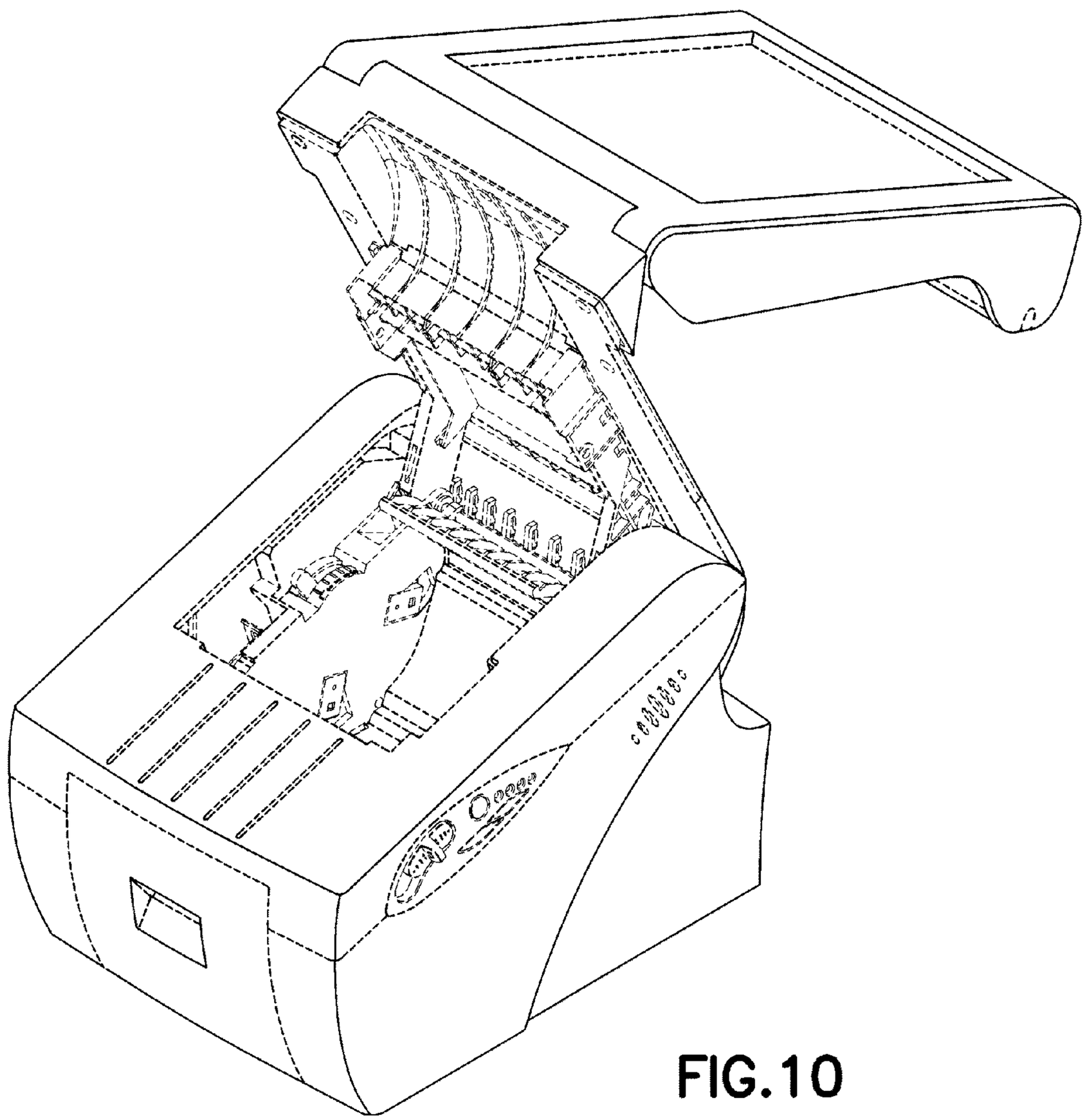

FIG.10