US00D634719S

(12) **United States Design Patent**
Yasuda et al.

(10) **Patent No.: US D634,719 S**
(45) **Date of Patent: ** Mar. 22, 2011**

(54) **ELASTIC MEMBRANE FOR SEMICONDUCTOR WAFER POLISHING APPARATUS**

(75) Inventors: **Hozumi Yasuda**, Ohta-ku (JP); **Keisuke Namiki**, Ohta-ku (JP); **Makoto Fukushima**, Ohta-ku (JP); **Osamu Nabeya**, Ohta-ku (JP); **Koji Saito**, Ohta-ku (JP); **Satoru Yamaki**, Ohta-ku (JP); **Tomoshi Inoue**, Ohta-ku (JP); **Shingo Togashi**, Ohta-ku (JP); **Tetsuji Togawa**, Ohta-ku (JP)

(73) Assignee: **Ebara Corporation**, Tokyo (JP)

(**) Term: **14 Years**

(21) Appl. No.: **29/356,450**

(22) Filed: **Feb. 25, 2010**

(30) **Foreign Application Priority Data**

Aug. 27, 2009 (JP) 2009-19719
Aug. 27, 2009 (JP) 2009-19720
Aug. 27, 2009 (JP) 2009-19721

(51) **LOC (9) Cl.** **13-03**
(52) **U.S. Cl.** **D13/182**
(58) **Field of Classification Search** D13/182; 257/E21.304; 451/66, 288, 289
See application file for complete search history.

(56) **References Cited**

U.S. PATENT DOCUMENTS

645,938	A	3/1900	Brown
5,964,653	A	10/1999	Perlov et al.
6,056,632	A	5/2000	Mitchel et al.
6,110,026	A	8/2000	Arai
6,159,079	A	12/2000	Zuniga et al.
6,183,354	B1	2/2001	Zuniga et al.

(Continued)

FOREIGN PATENT DOCUMENTS

EP	2005-0814728	A1	9/2007

(Continued)

Primary Examiner — Selina Sikder
(74) *Attorney, Agent, or Firm* — Sughrue Mion, PLLC

(57) **CLAIM**

The ornamental design for an elastic membrane for semiconductor wafer polishing apparatus, as shown and described.

DESCRIPTION

FIG. **1** is a bottom view of an elastic membrane for semiconductor wafer polishing apparatus showing our new design;
FIG. **2** is a top view thereof;
FIG. **3** is a front view thereof;
FIG. **4** is a right side view thereof;
FIG. **5** is a rear view thereof;
FIG. **6** is a left side view thereof;
FIG. **7** is a perspective view, observed from above thereof enlarged for ease of illustrations;
FIG. **8** is a cross-section view taken along the line **8**—**8** of FIG. **2** thereof;
FIG. **9** is a enlarged view of part **9** of FIG. **8** thereof;
FIG. **10** is a bottom view thereof;
FIG. **11** is a top view thereof;
FIG. **12** is a front view thereof;
FIG. **13** is a right side view thereof;
FIG. **14** is a rear view thereof;
FIG. **15** is a left side view thereof;
FIG. **16** is a perspective view, observed from above thereof enlarged for ease of illustrations;
FIG. **17** is a cross-section view taken along the line **17**—**17** of FIG. **11** thereof;
FIG. **18** is a enlarged view of part **18** of FIG. **17** thereof;
FIG. **19** is a bottom view thereof;
FIG. **20** is a top view thereof;
FIG. **21** is a front view thereof; (rear view is omit since it is identical with the front)
FIG. **22** is a right side view thereof; (left side view is omitted since it is identical with the right side view)
FIG. **23** is a perspective view, observed from above thereof enlarged for ease of illustrations;
FIG. **24** is a cross-section view taken along the line **24**—**24** of FIG. **20** thereof; and,
FIG. **25** is a enlarged view of part **25** of FIG. **24** thereof.
The broken lines depict environmental subject matter only and form no part of the claimed design.

1 Claim, 9 Drawing Sheets

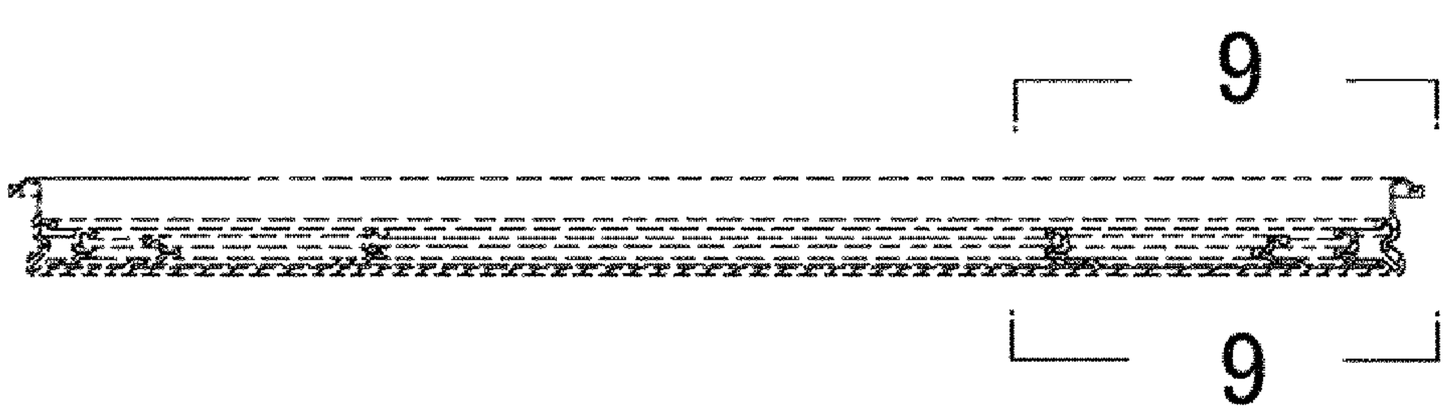

U.S. PATENT DOCUMENTS

D488,135	S *	4/2004	Hatter	D13/182
6,722,965	B2	4/2004	Zuniga et al.	
6,739,958	B2 *	5/2004	Chao et al.	451/288
6,852,019	B2	2/2005	Togawa et al.	
6,890,402	B2	5/2005	Gunji et al.	
7,033,260	B2	4/2006	Togawa et al.	
7,083,507	B2	8/2006	Togawa et al.	
7,108,592	B2 *	9/2006	Fukaya et al.	451/285
7,255,771	B2	8/2007	Chen et al.	
7,311,585	B2	12/2007	Togawa et al.	
7,357,699	B2	4/2008	Togawa et al.	
7,491,117	B2	2/2009	Togawa et al.	
7,632,173	B2	12/2009	Togawa et al.	
7,635,292	B2	12/2009	Togawa et al.	
D616,390	S *	5/2010	Sato	D13/182
2002/0086624	A1	7/2002	Zuniga et al.	
2003/0171076	A1	9/2003	Molone et al.	
2008/0070479	A1	3/2008	Nabeya et al.	
2008/0299880	A1 *	12/2008	Gunji et al.	451/385
2009/0233532	A1	9/2009	Togawa et al.	

FOREIGN PATENT DOCUMENTS

JP	2000-167762	A	6/2000
JP	2000-301452	A	10/2000
JP	2002-075936	A	3/2002
JP	2002-527894	A	8/2002
JP	2004-297029	A	10/2004
JP	2004-363505	A	12/2004
JP	2006-159392	A	6/2006
JP	2006-255851	A	9/2006
JP	3937368	B	4/2007
KR	30-0526799	S	4/2009
KR	30-0526801	S	4/2009

* cited by examiner

FIG.1

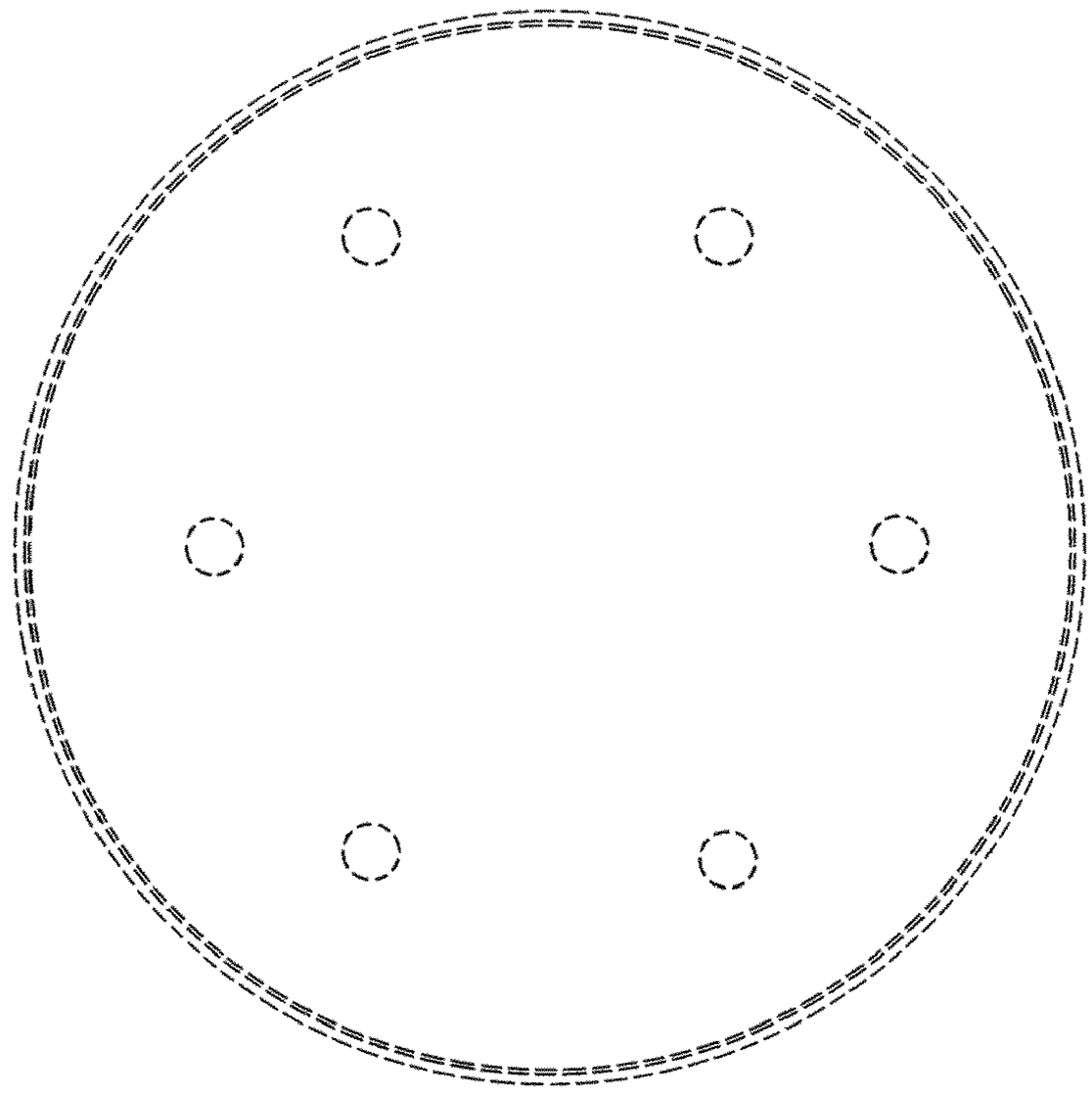

FIG.2

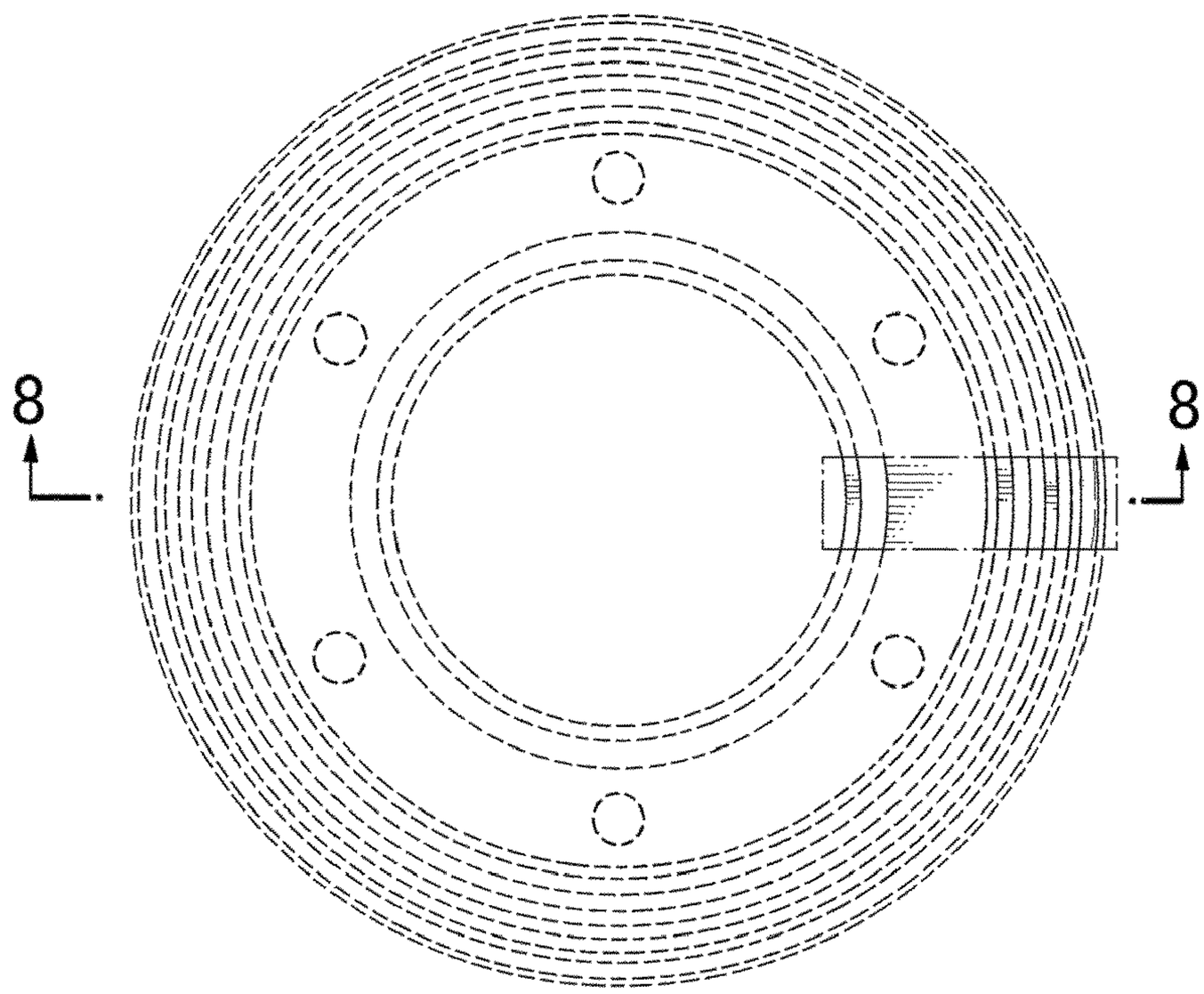

FIG.3

FIG.4

FIG.5

FIG.6

FIG.7

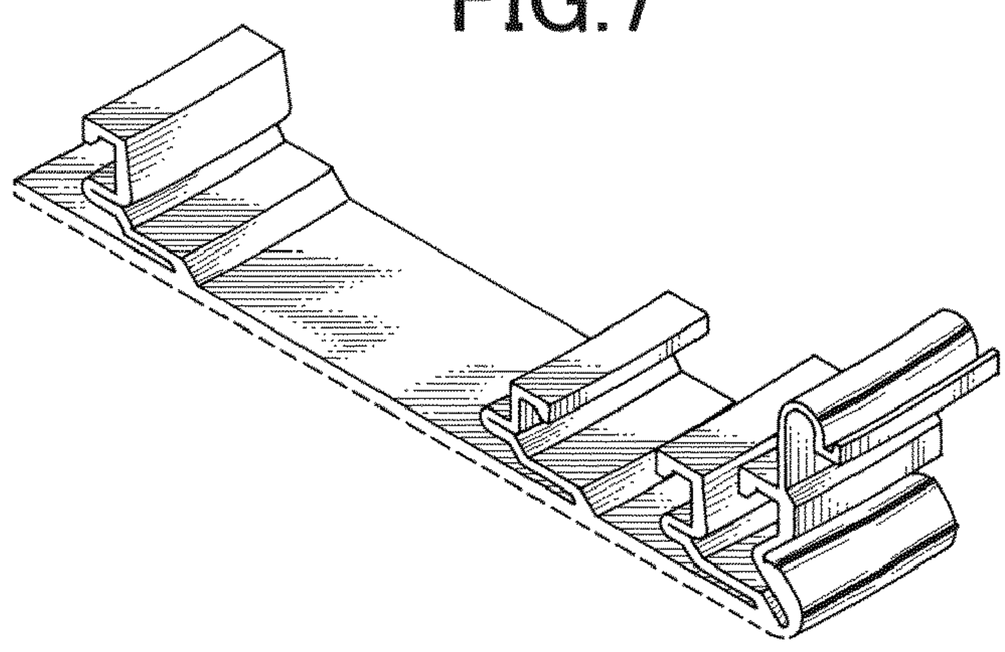

FIG.8

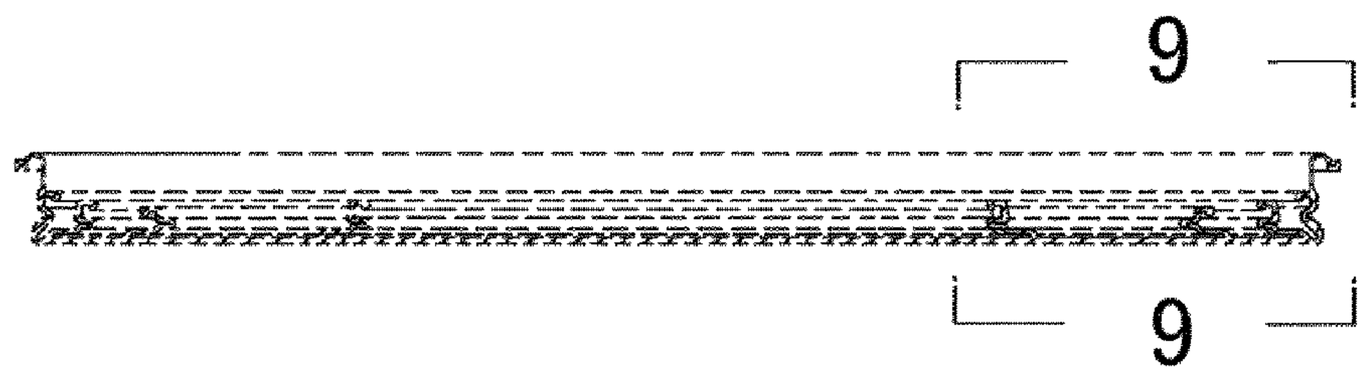

FIG.9

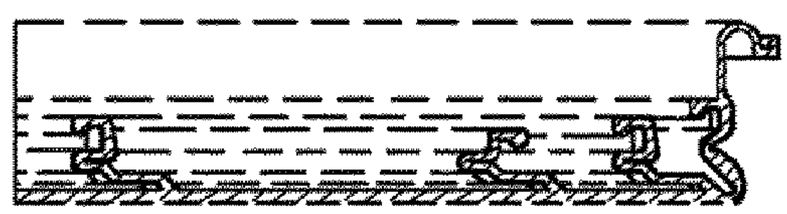

FIG.10

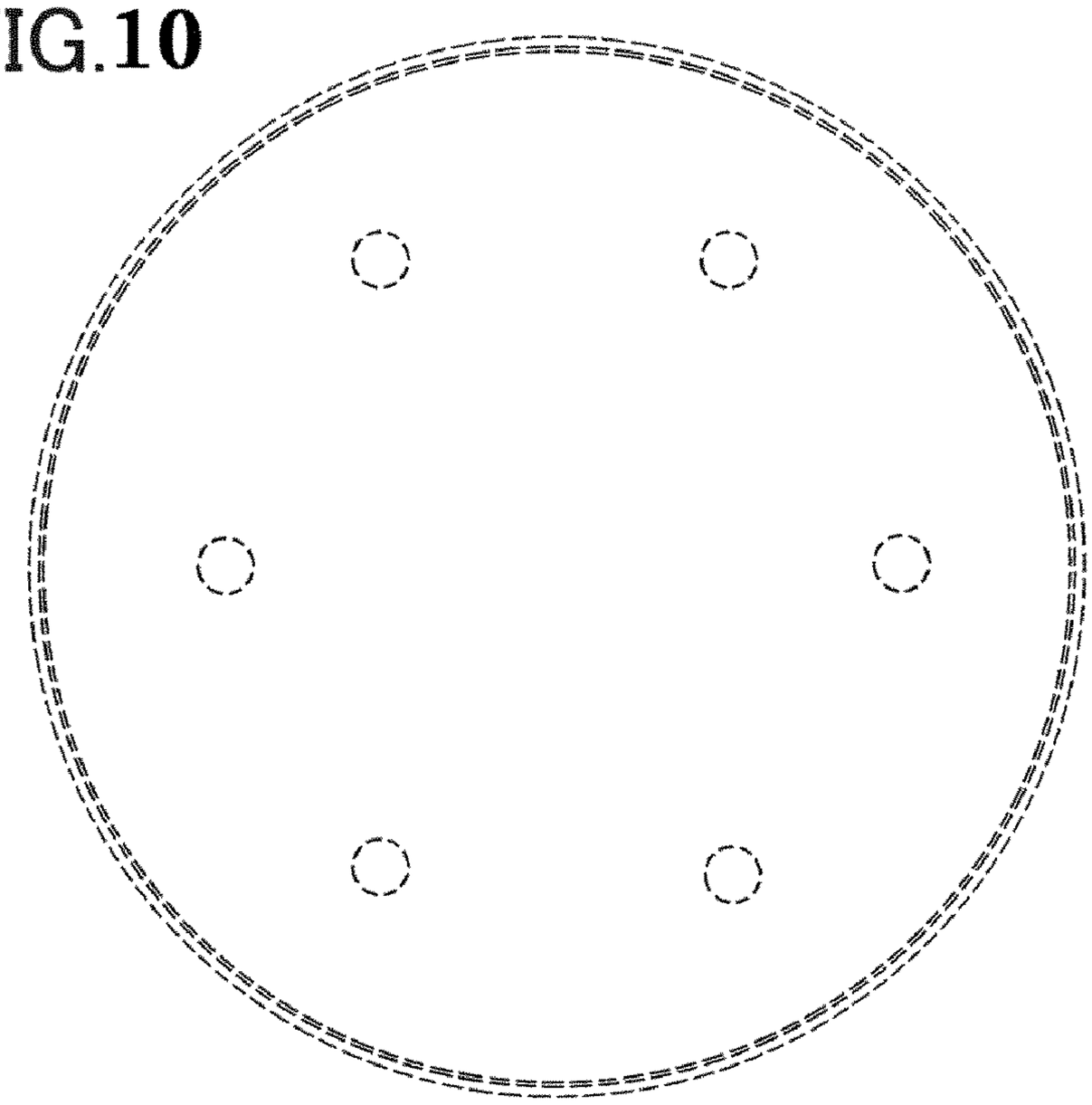

FIG.11

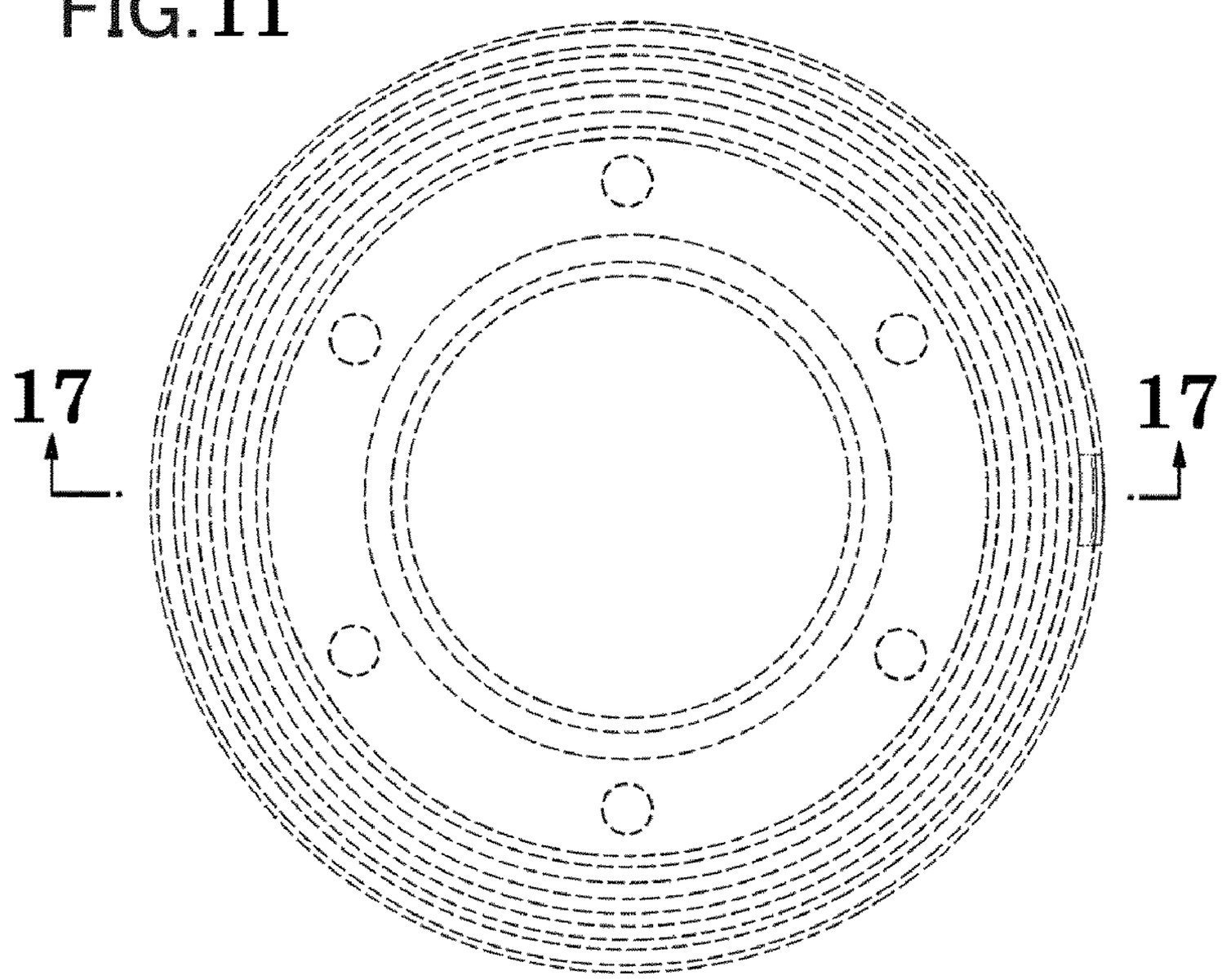

FIG.12

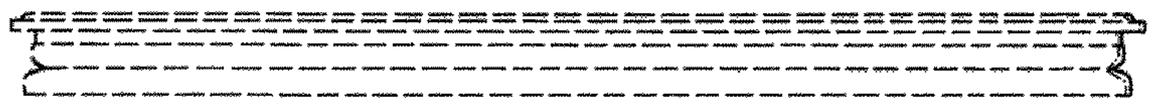

FIG.13

FIG.14

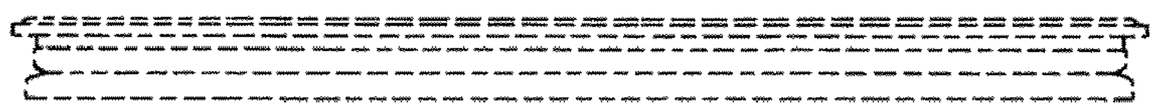

FIG.15

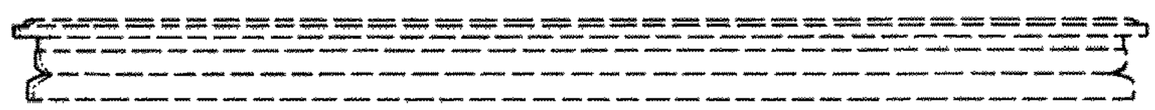

FIG.16

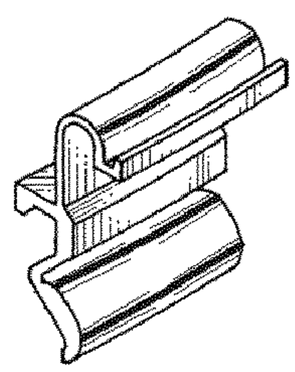

FIG.17

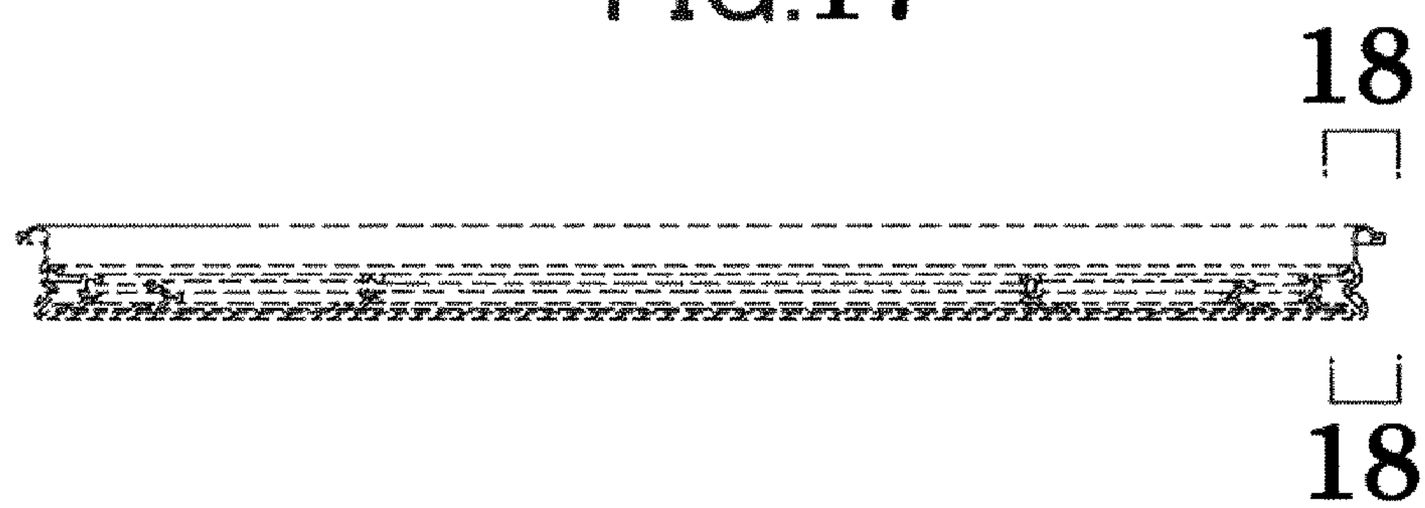

FIG.18

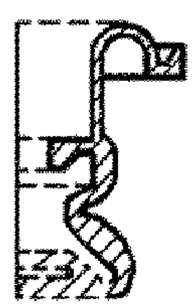

FIG.19

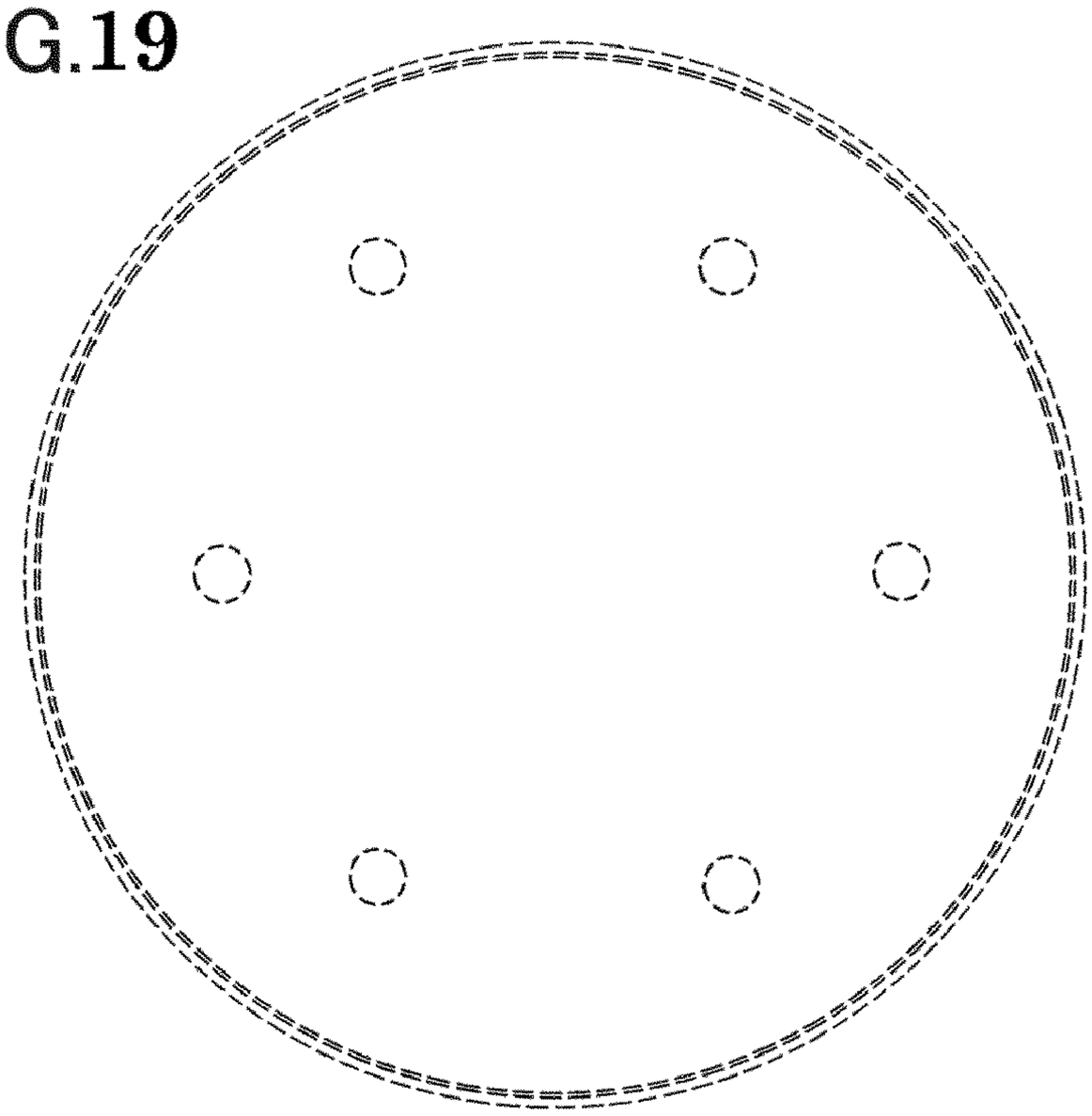

FIG.20

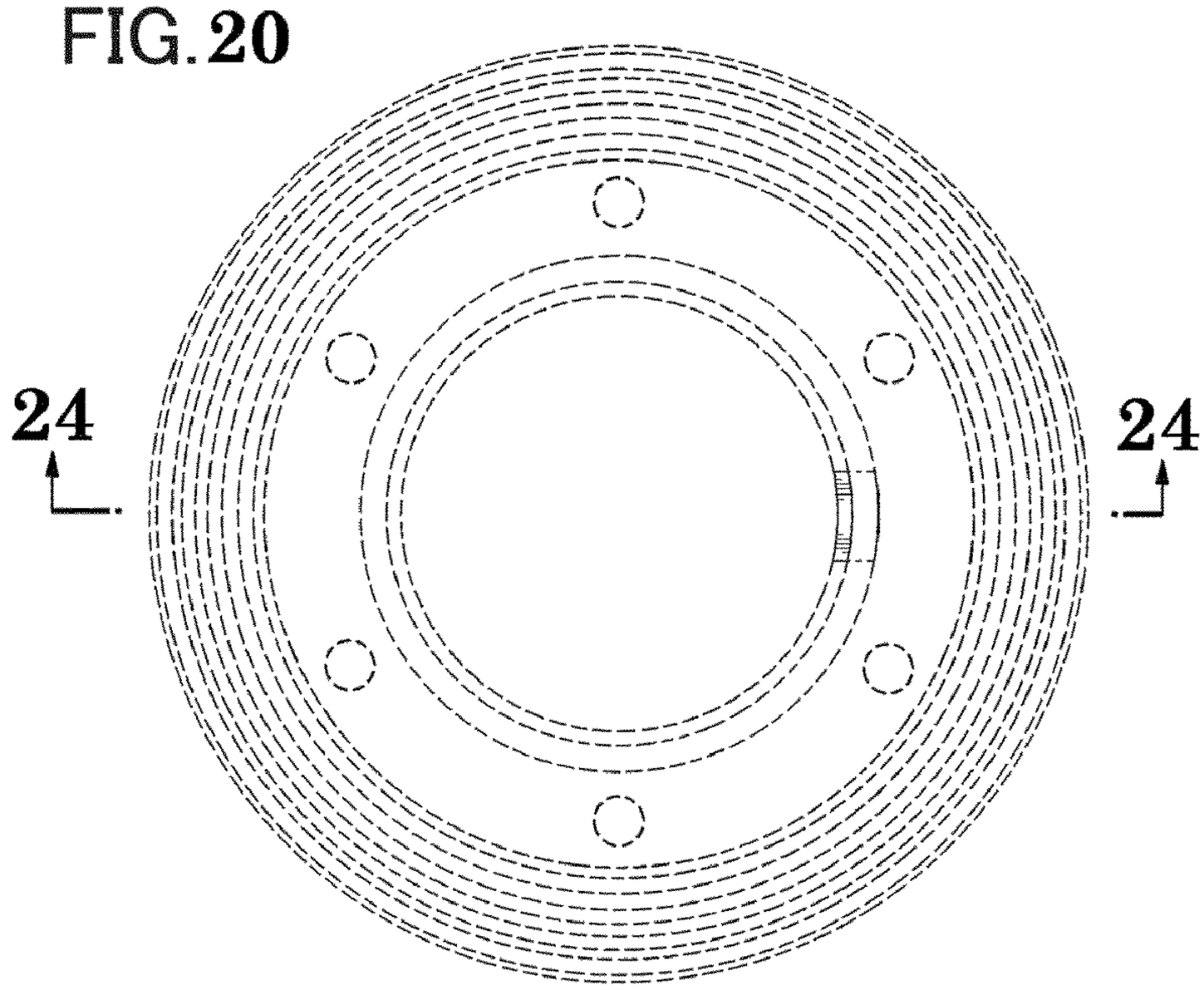

FIG. 21

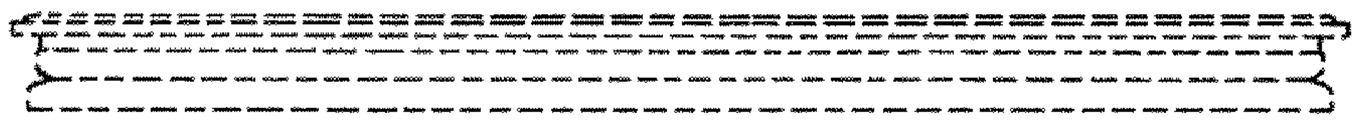

FIG. 22

FIG. 23

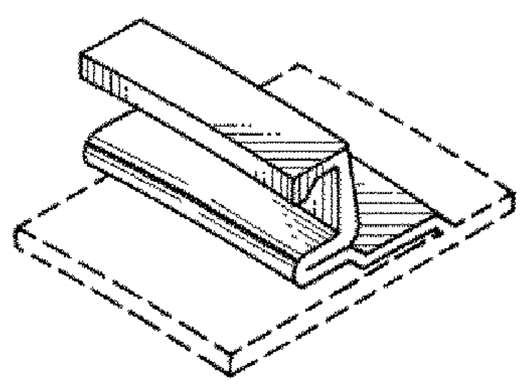

FIG. 24

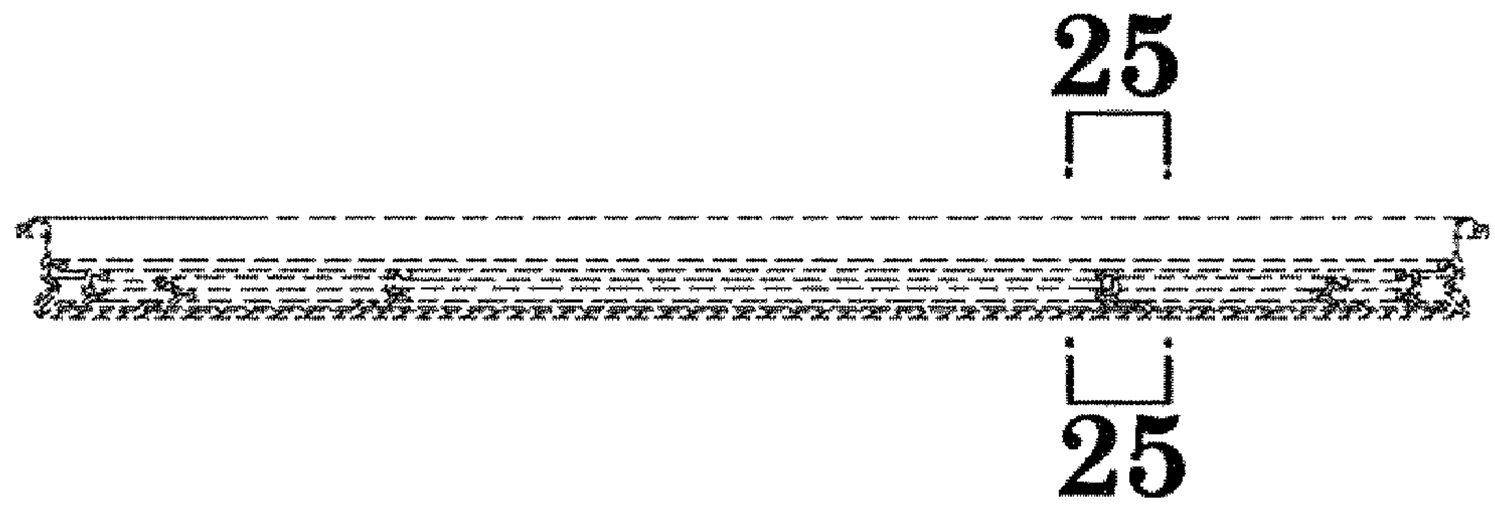
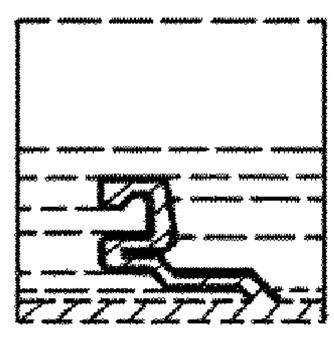
FIG. 25