US00D634060S

(12) United States Design Patent
Wardenburg

(10) **Patent No.: US D634,060 S**
(45) **Date of Patent: ** *Mar. 8, 2011**

(54) **GROW LIGHT REFLECTOR HOUSING**

(75) Inventor: **Peter Wardenburg**, Petaluma, CA (US)

(73) Assignee: **Hydrofarm, Inc.**, Petaluma, CA (US)

(*) Notice: This patent is subject to a terminal disclaimer.

(**) Term: **14 Years**

(21) Appl. No.: **29/361,818**

(22) Filed: **May 14, 2010**

(51) **LOC (9) Cl.** **26-99**
(52) **U.S. Cl.** **D26/118**
(58) **Field of Classification Search** D26/101, D26/155, 68, 67, 142, 81, 128, 124, 118, D26/85, 86, 74, 87, 88, 76, 61, 70, 72, 102, D26/120, 138, 140; D11/157, 117, 131, D11/141; D13/102; 52/173.3; 362/362, 362/375, 294, 55, 563, 564, 147, 285, 290, 362/292, 330, 331, 351, 363, 410, 417, 800, 362/805
See application file for complete search history.

(56) **References Cited**

U.S. PATENT DOCUMENTS

1,930,070	A	*	10/1933	Zecher	313/590
4,933,821	A	*	6/1990	Anderson	362/223
6,152,579	A	*	11/2000	Reed et al.	362/320
D456,938	S	*	5/2002	Wardenburg	D26/118
D543,652	S	*	5/2007	Hargreaves	D26/76
D544,984	S	*	6/2007	Hargreaves	D26/76
D544,987	S	*	6/2007	Hargreaves	D26/88
D545,484	S	*	6/2007	Hargreaves	D26/118
D545,485	S	*	6/2007	Hargreaves	D26/118
2008/0205030	A1	*	8/2008	Hargreaves	362/1

* cited by examiner

Primary Examiner — Cathron C Brooks
Assistant Examiner — Kevin K Rudzinski
(74) *Attorney, Agent, or Firm* — Craig M. Stainbrook; Stainbrook & Stainbrook, LLP

(57) **CLAIM**

The ornamental design for a grow light reflector housing, as shown and described.

DESCRIPTION

FIG. **1** is an upper right front perspective view of my design of a grow light reflector housing;
FIG. **2** is a front elevational view, the rear is identical thereto;
FIG. **3** is a left side elevational view, the right side is identical thereto;
FIG. **4** is a top plan view; and,
FIG. **5** is a bottom plan view.
The broken lines shown in the drawings, which define the bounds of the claimed design between claimed and unclaimed areas, form no part thereof.

1 Claim, 4 Drawing Sheets

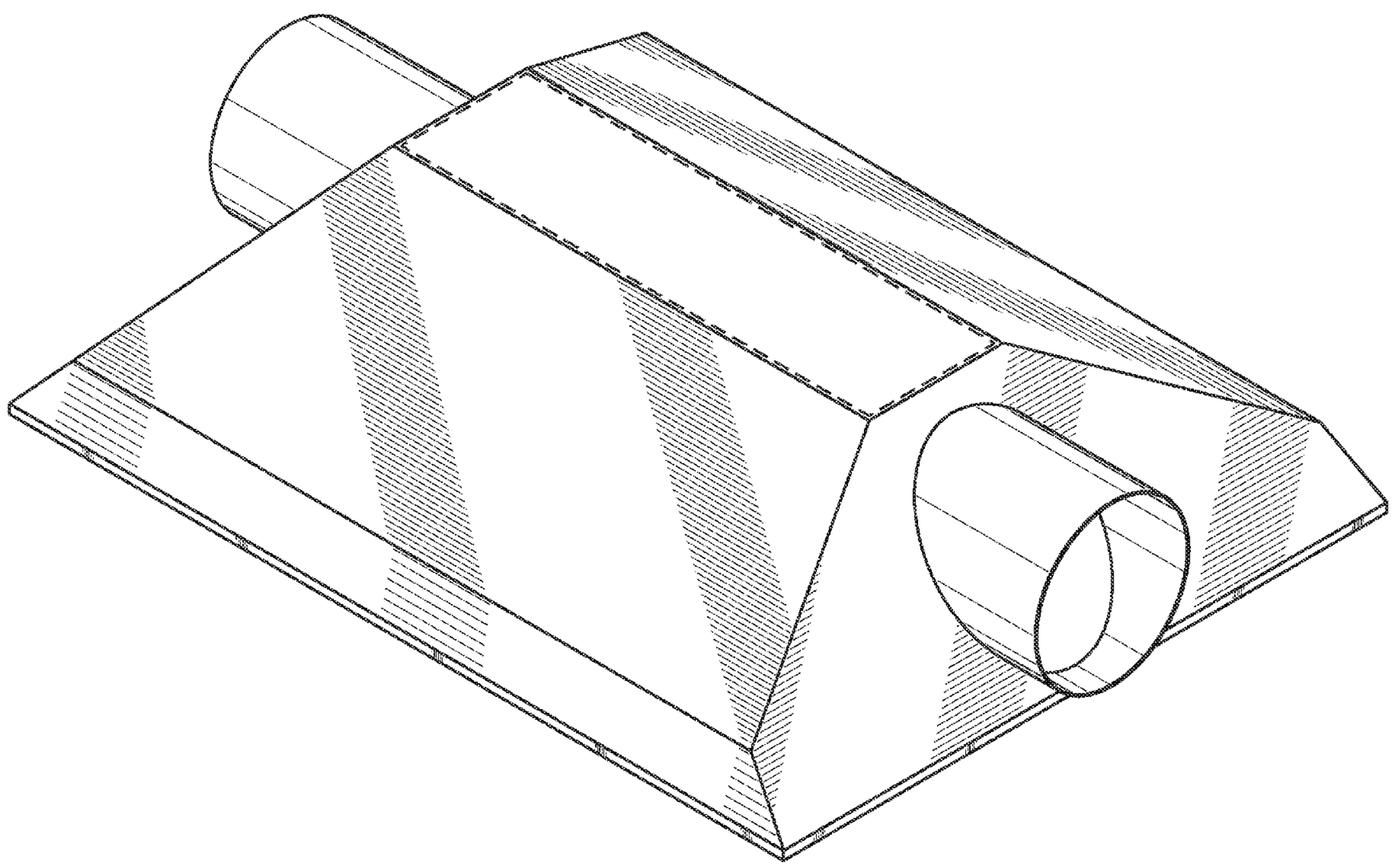

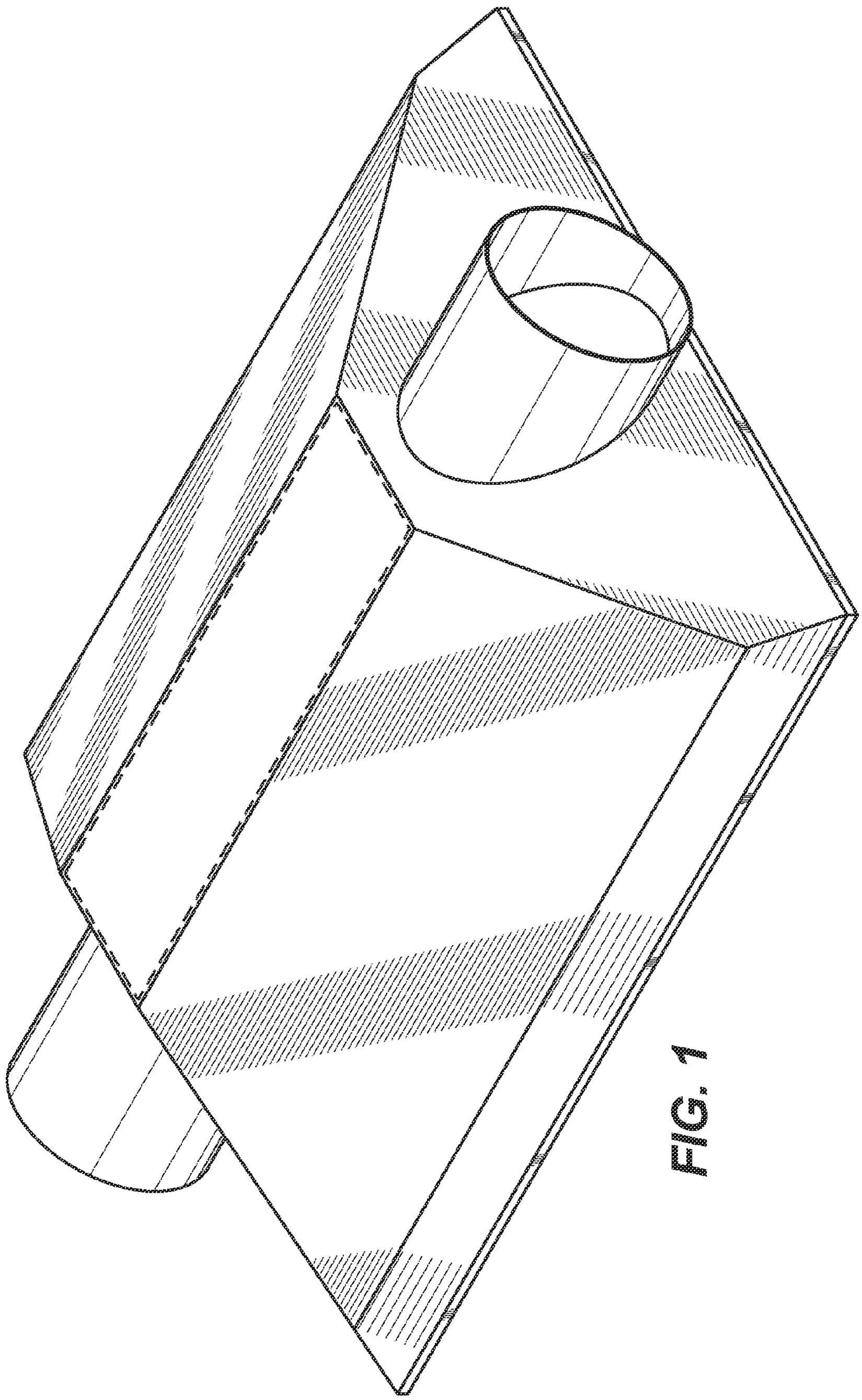

FIG. 1

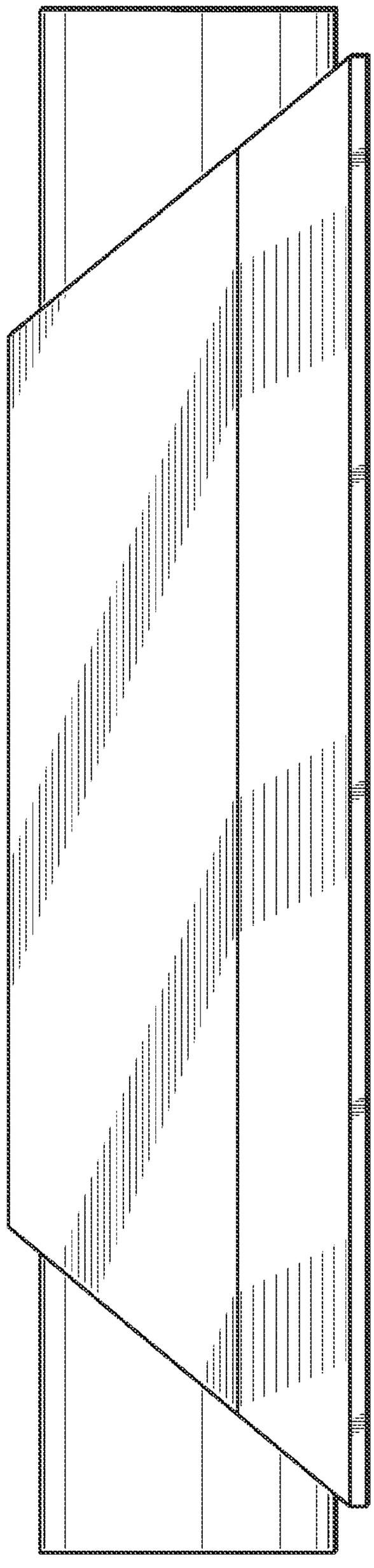

FIG. 2

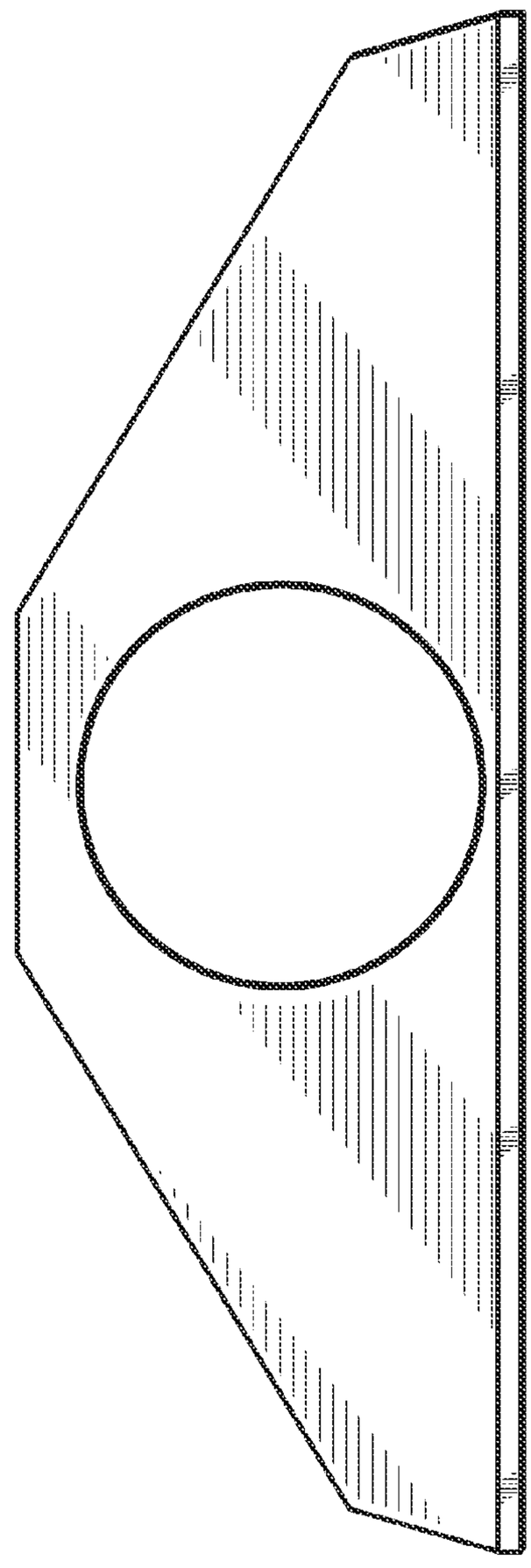

FIG. 3

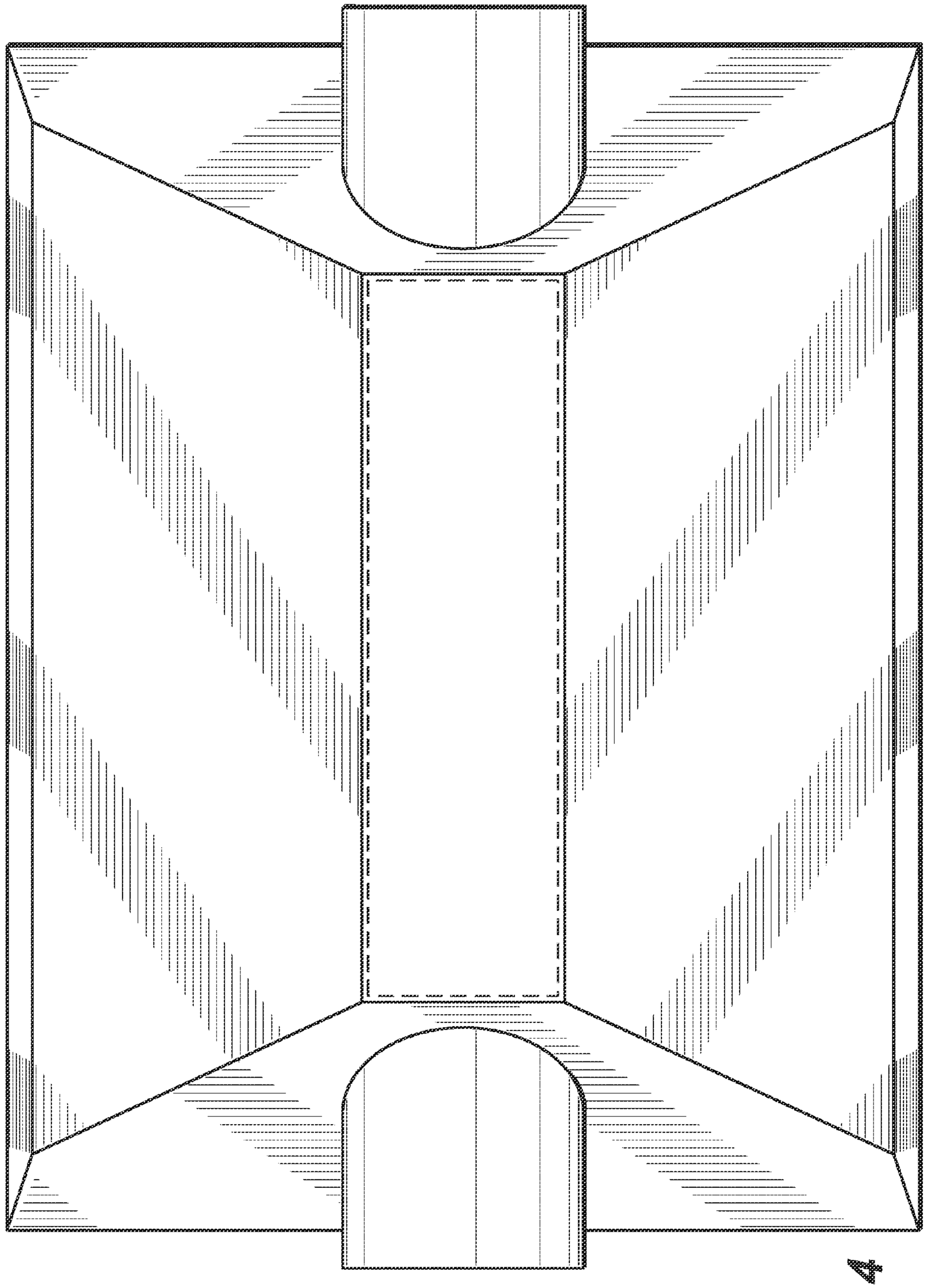

FIG. 4

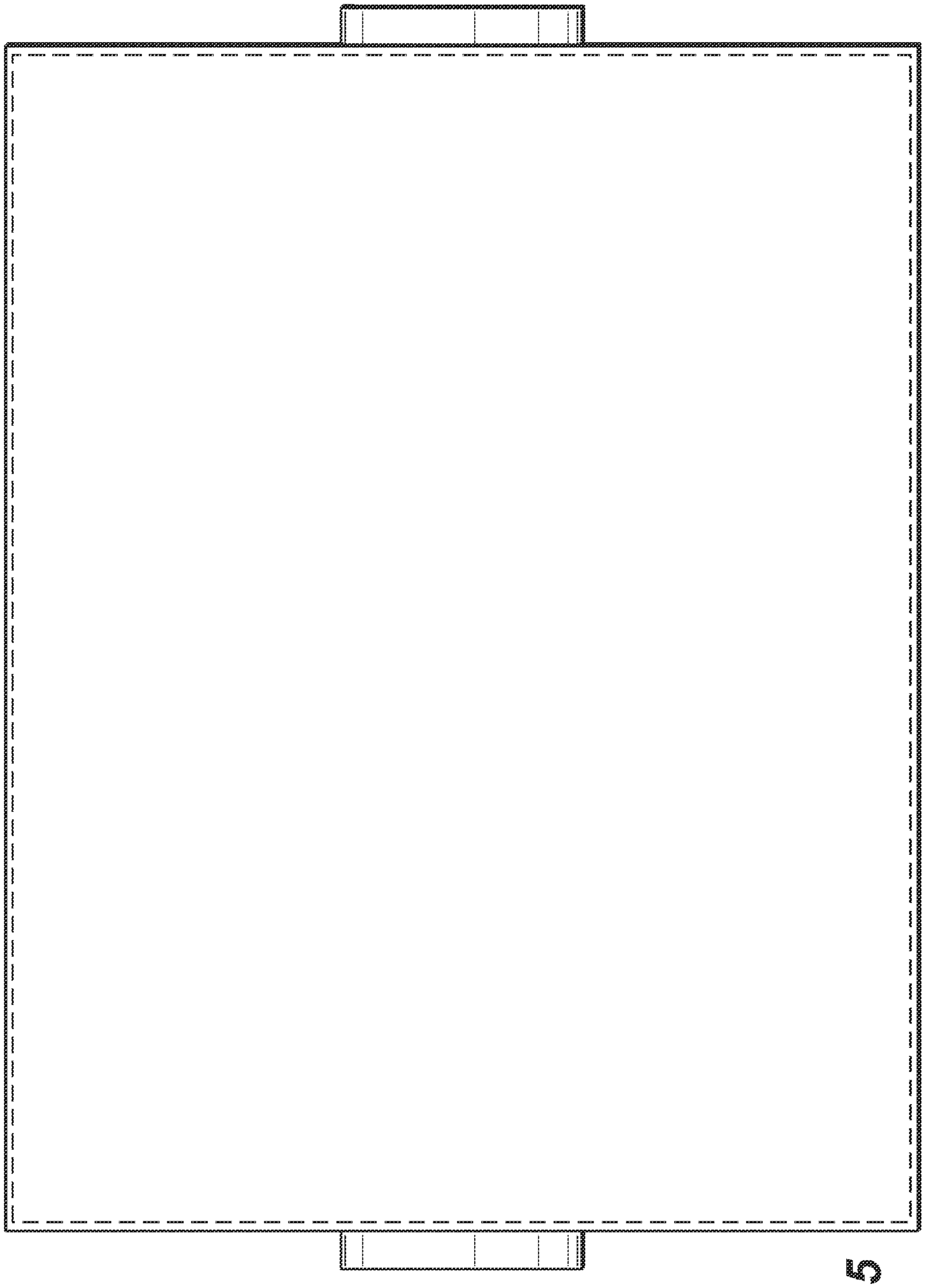

FIG. 5