US00D634007S

(12) United States Design Patent

Zinger et al.

(10) Patent No.: US D634,007 S
(45) Date of Patent: ** Mar. 8, 2011

(54) **NEEDLELESS ADDITIVE CONTROL VALVE**

(75) Inventors: **Freddy Zinger**, Ra'anna (IL); **Igor Denenburg**, Beberi (LV); **Niv Ben Shalom**, Netanya (IL)

(73) Assignee: **Medimop Medical Projects Ltd.**, Ra'anana (IL)

(**) Term: **14 Years**

(21) Appl. No.: **29/334,693**

(22) Filed: **Mar. 31, 2009**

(51) **LOC (9) Cl.** **24-02**
(52) **U.S. Cl.** **D24/129**
(58) **Field of Classification Search** D24/129, D24/130, 112; 604/93.01, 173, 246, 248, 604/407, 411, 412, 413, 414, 416, 533, 537, 604/539
See application file for complete search history.

(56) **References Cited**

U.S. PATENT DOCUMENTS

1,021,681	A	*	3/1912	Jennings	137/375
3,788,524	A		1/1974	Davis et al.	
3,822,700	A	*	7/1974	Pennington	604/251
3,938,520	A		2/1976	Scislowicz et al.	
4,121,585	A	*	10/1978	Becker, Jr.	604/86
4,161,178	A		7/1979	Genese	
4,203,067	A		5/1980	Fitzky et al.	
4,203,443	A		5/1980	Genese	
4,303,067	A		12/1981	Connolly et al.	
4,335,717	A		6/1982	Bujan et al.	
D268,871	S	*	5/1983	Benham et al.	D24/129
4,392,850	A		7/1983	Elias et al.	
4,410,321	A		10/1983	Pearson et al.	
4,411,662	A		10/1983	Pearson	
4,465,471	A		8/1984	Harris et al.	
4,573,993	A	*	3/1986	Hoag et al.	604/411
4,581,014	A		4/1986	Millerd et al.	
4,752,292	A	*	6/1988	Lopez et al.	604/244
4,804,366	A		2/1989	Zdeb et al.	
4,832,690	A		5/1989	Kuu	
4,857,062	A		8/1989	Russell	
4,931,040	A	*	6/1990	Haber et al.	604/110
4,932,944	A	*	6/1990	Jagger et al.	604/191

(Continued)

FOREIGN PATENT DOCUMENTS

IL	171662	*	10/2005

(Continued)

OTHER PUBLICATIONS

Article with picture of West Pharmaceutical Services' Vial2Bag Needleless System, [on-line]; ISIPS Newsletter, Oct. 26, 2007]; [retrieved from Internet Feb. 16, 2010]; URL: <http://www.isips.org/reports/ISIPS_Newsletter_October_26_2007.html.> (7 pages see pp. 5-6).*

(Continued)

Primary Examiner—Elizabeth A Albert
Assistant Examiner—Karen E Eldridge Powers
(74) *Attorney, Agent, or Firm*—Panitch Schwarze Belisario & Nadel LLP

(57) **CLAIM**

The ornamental design for a needleless additive control valve, substantially as shown and described.

DESCRIPTION

FIG. **1** is a right front perspective view of a needleless additive control valve in accordance with our new design;

FIG. **2** is a right rear perspective view thereof;

FIG. **3** is a front elevation view thereof;

FIG. **4** is a right elevation view thereof;

FIG. **5** is a rear elevation view thereof;

FIG. **6** is a left elevation view thereof;

FIG. **7** is a top plan view thereof; and,

FIG. **8** is a bottom plan view thereof.

1 Claim, 4 Drawing Sheets

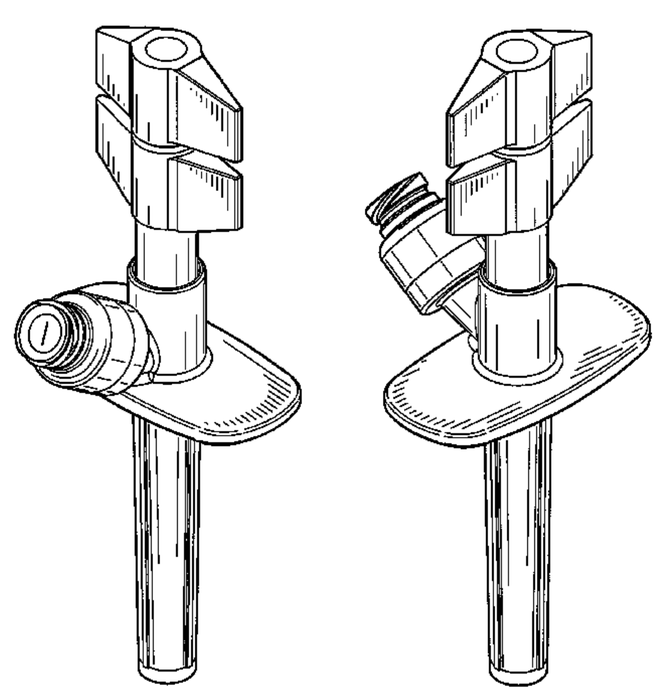

U.S. PATENT DOCUMENTS

5,006,114	A	*	4/1991	Rogers et al.	604/245
5,125,915	A	*	6/1992	Berry et al.	604/533
D328,788	S	*	8/1992	Sagae et al.	D24/129
5,242,432	A		9/1993	DeFrank	
D341,420	S	*	11/1993	Conn	D24/112
5,300,034	A		4/1994	Behnke et al.	
5,445,630	A		8/1995	Richmond	
5,547,471	A		8/1996	Thompson et al.	
5,549,577	A		8/1996	Siegel et al.	
5,603,706	A	*	2/1997	Wyatt et al.	604/539
5,645,538	A		7/1997	Richmond	
5,647,845	A		7/1997	Haber et al.	
5,651,776	A	*	7/1997	Appling et al.	604/534
5,676,346	A		10/1997	Leinsing	
5,776,116	A	*	7/1998	Lopez et al.	604/533
5,853,406	A		12/1998	Masuda et al.	
5,887,633	A	*	3/1999	Yale et al.	141/329
5,893,397	A		4/1999	Peterson et al.	
5,911,710	A		6/1999	Barry et al.	
5,935,112	A		8/1999	Stevens et al.	
5,941,848	A		8/1999	Nishimoto et al.	
6,099,511	A	*	8/2000	Devos et al.	604/246
6,142,446	A		11/2000	Leinsing	
6,146,362	A		11/2000	Turnbull et al.	
6,171,287	B1	*	1/2001	Lynn et al.	604/256
6,179,822	B1		1/2001	Niedospial, Jr.	
6,179,823	B1		1/2001	Niedospial, Jr.	
6,290,688	B1	*	9/2001	Lopez et al.	604/500
6,296,621	B1		10/2001	Masuda et al.	
6,358,236	B1		3/2002	DeFoggi et al.	
6,440,107	B1		8/2002	Trombley, III et al.	
D468,015	S	*	12/2002	Horppu	D24/129
6,571,837	B2		6/2003	Jansen et al.	
D482,121	S	*	11/2003	Harding et al.	D24/129
D482,447	S	*	11/2003	Harding et al.	D24/129
6,692,478	B1		2/2004	Paradis	
6,699,229	B2		3/2004	Zinger et al.	
6,706,022	B1		3/2004	Leinsing et al.	
6,875,205	B2		4/2005	Leinsing	
6,997,916	B2		2/2006	Simas, Jr. et al.	
7,070,589	B2	*	7/2006	Lolachi et al.	604/537
7,192,423	B2	*	3/2007	Wong	604/411
7,241,285	B1		7/2007	Dikeman	
7,326,188	B1	*	2/2008	Russell et al.	604/248
7,544,191	B2	*	6/2009	Peluso et al.	604/414
2002/0128628	A1		9/2002	Fathallah	
2003/0073971	A1	*	4/2003	Saker	604/403
2003/0187420	A1		10/2003	Akerlund et al.	
2003/0191445	A1		10/2003	Wallen et al.	
2003/0199847	A1		10/2003	Akerlund et al.	
2004/0073189	A1		4/2004	Wyatt et al.	
2004/0204699	A1		10/2004	Hanly et al.	
2005/0182383	A1	*	8/2005	Wallen	604/403
2006/0095015	A1	*	5/2006	Hobbs et al.	604/508
2006/0106360	A1		5/2006	Wong	
2007/0249995	A1	*	10/2007	Van Manen	604/93.01
2007/0299404	A1	*	12/2007	Katoh et al.	604/173

FOREIGN PATENT DOCUMENTS

WO	03/079956	A1	10/2003

OTHER PUBLICATIONS

IV disposables sets catalogue, Cardinal Health, Alaris® products, SmartSite® access devices and accessories product No. 10013365, SmartSite add-on bag access device with spike adapter and needle-free valve bag access port, pp. 1-5, Fall edition (2007).

International Search Report Issued Jan. 23, 2007 in Int'l Application No. PCT/IL/2006/001228.

Office Action Issued Jun. 8, 2010 in US Application No. 12/112,490.

Office Action issued Sep. 28, 2010 in U.S. Appl. No. 12/112,490.

* cited by examiner

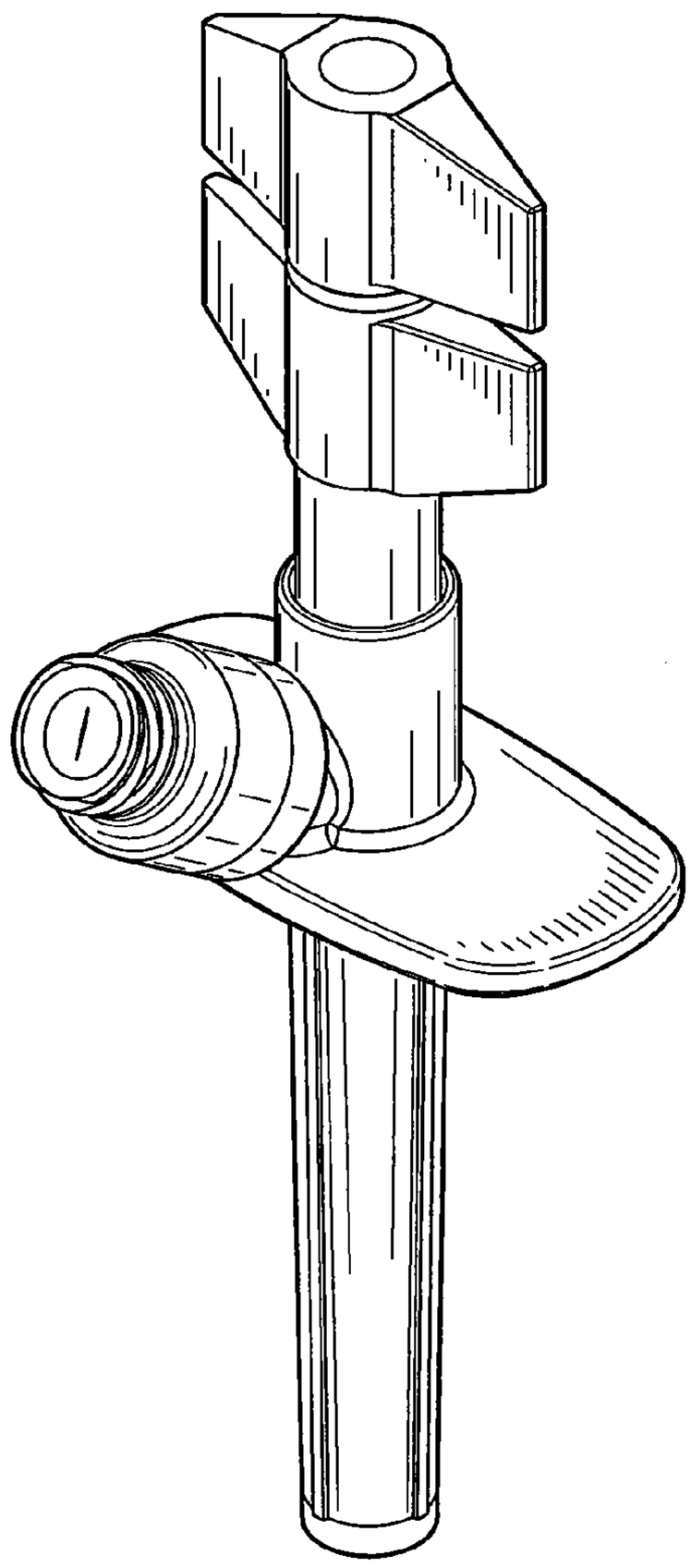

FIG.1

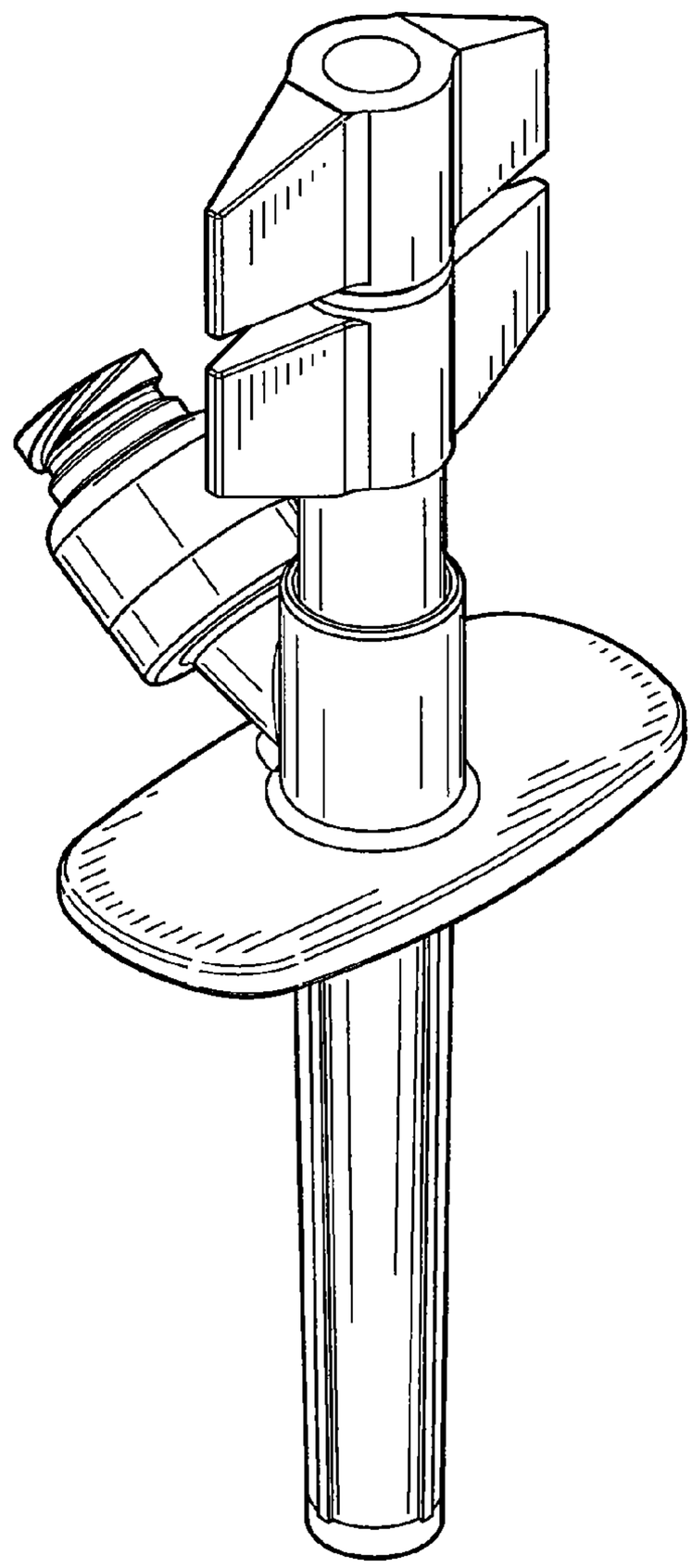

FIG.2

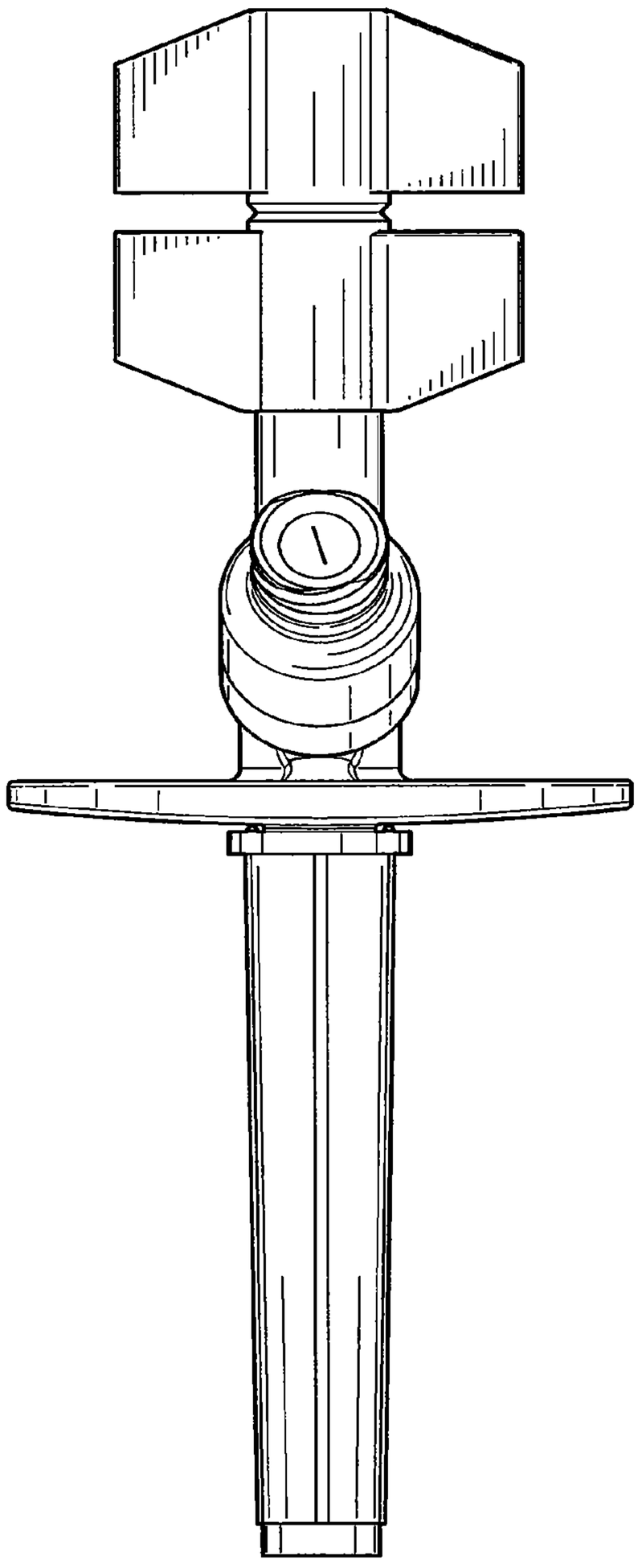

FIG.3

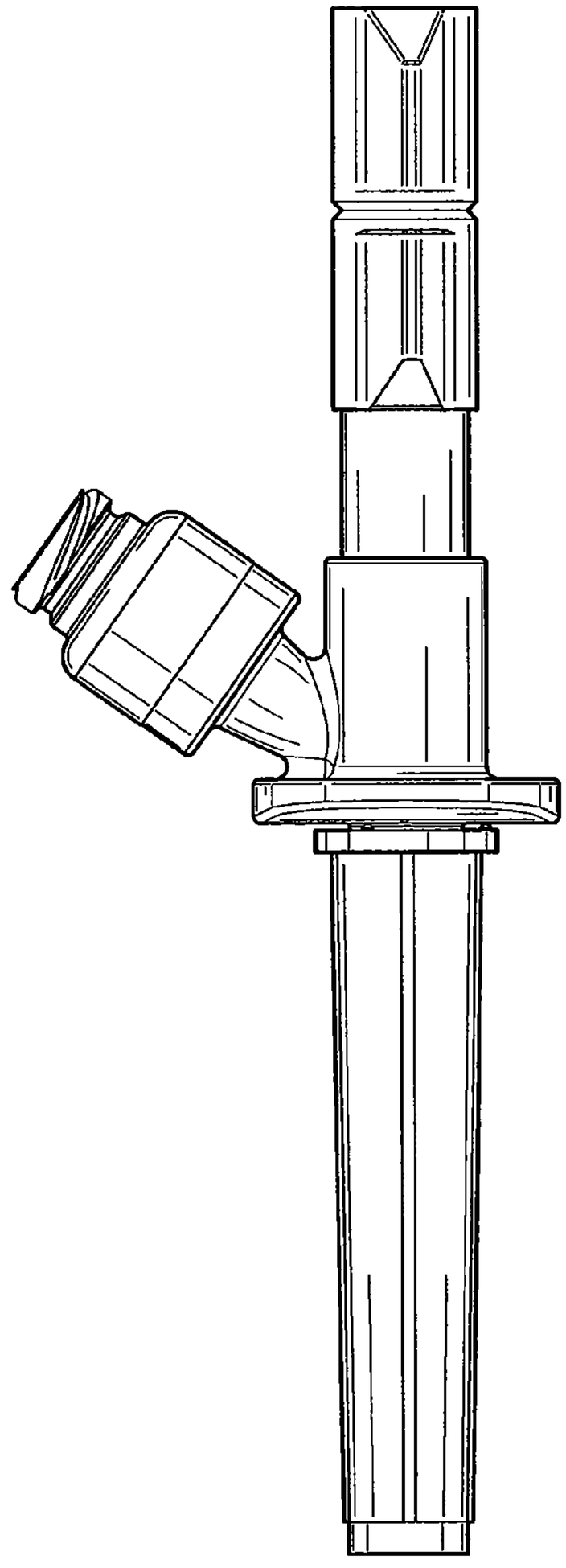

FIG.4

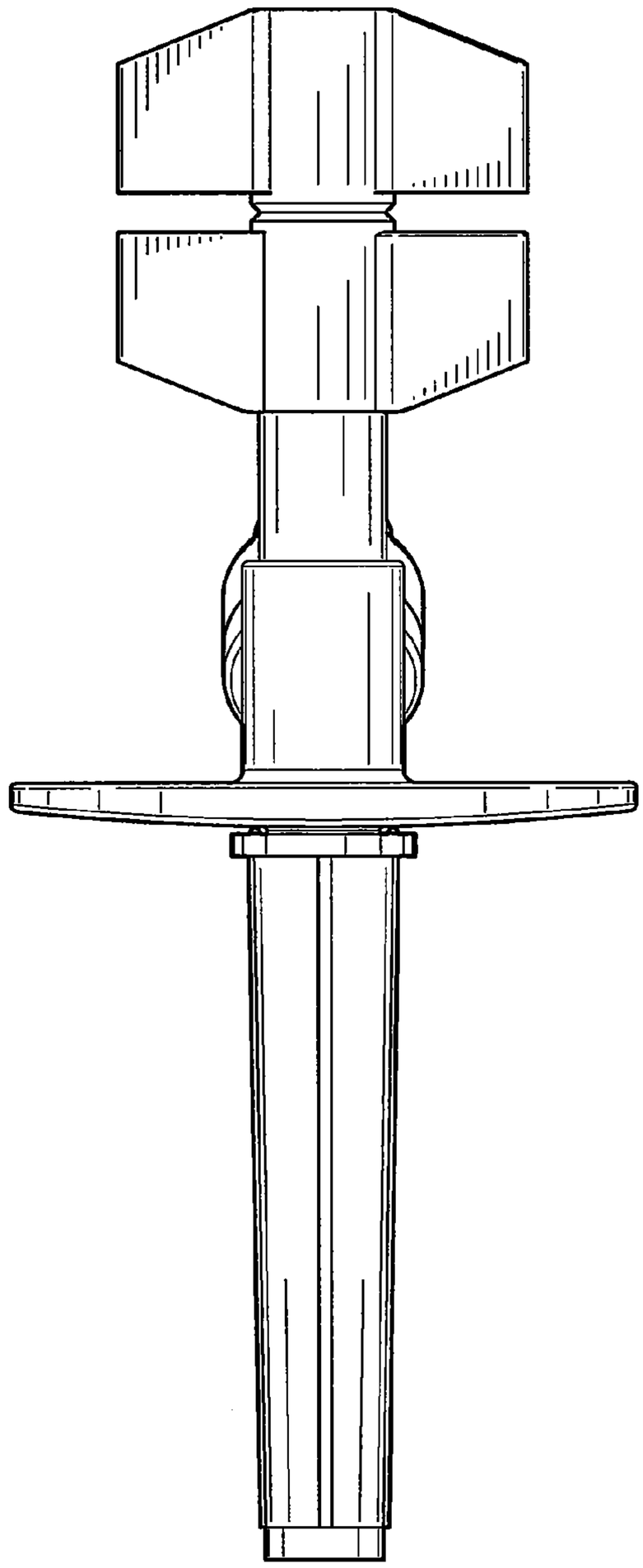

FIG.5

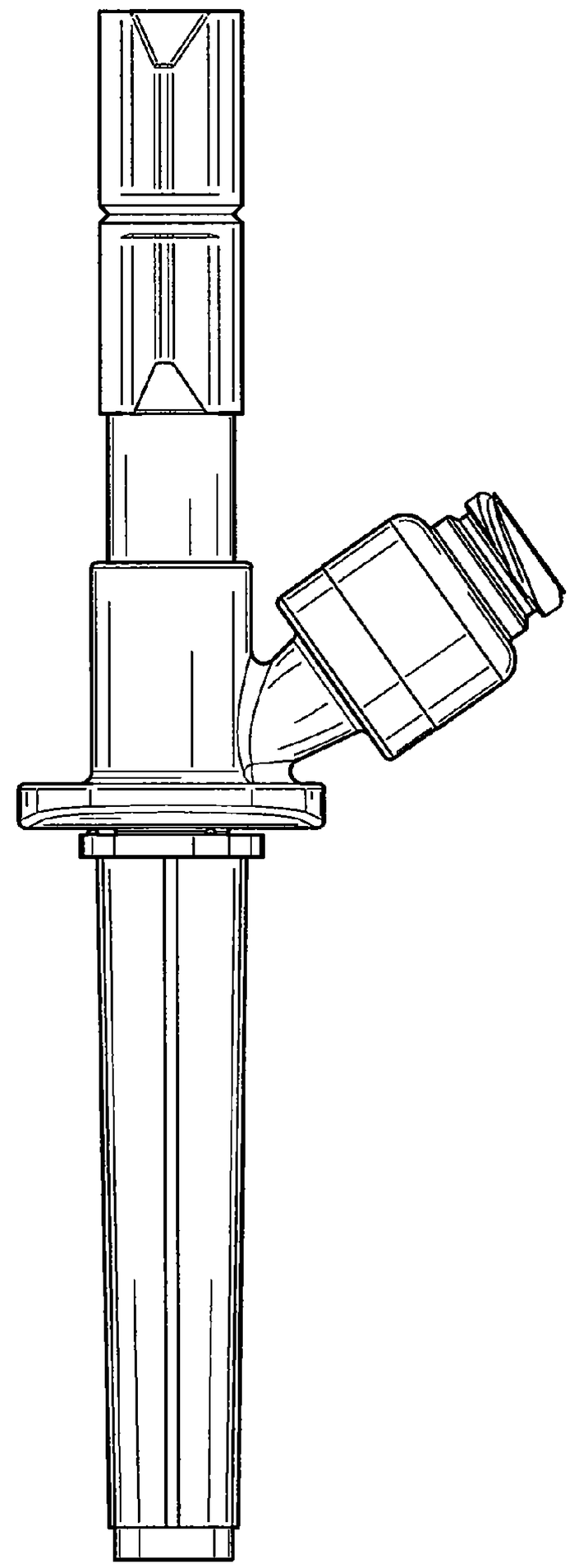

FIG.6

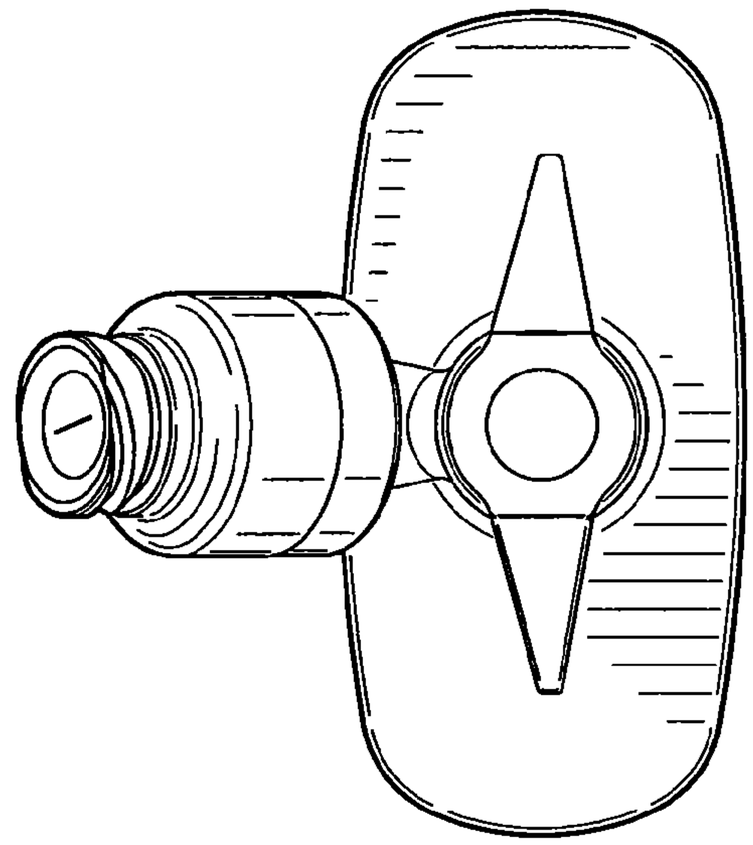

FIG.7

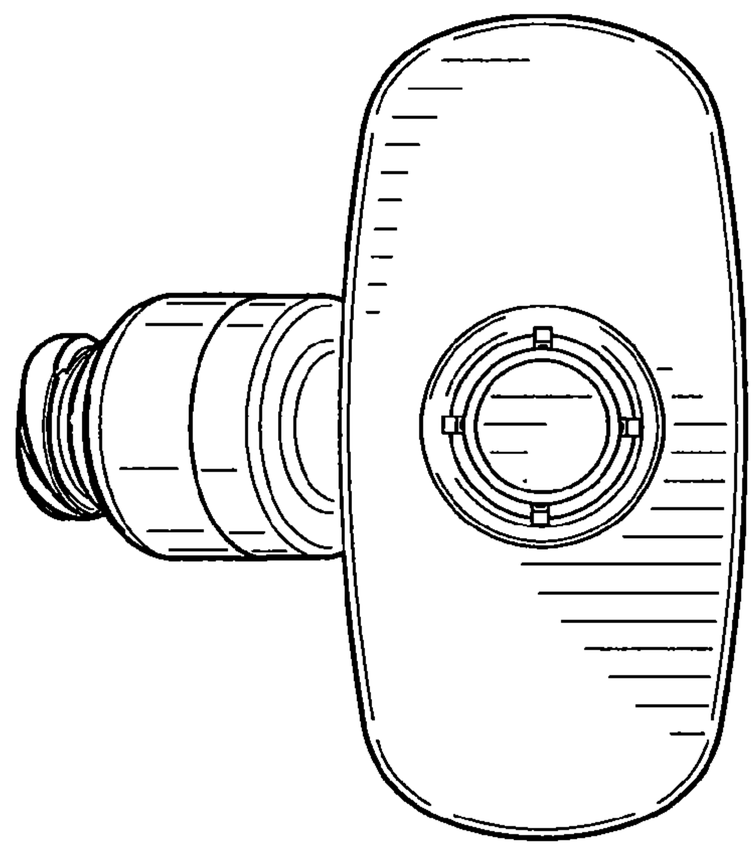

FIG.8