US00D633855S

(12) United States Design Patent
Farber

(10) **Patent No.: US D633,855 S**
(45) **Date of Patent: ** Mar. 8, 2011**

(54) **HITCH-MOUNT BICYCLE CARRIER**

(75) Inventor: **Robert Farber**, Montreal (CA)

(73) Assignee: **Swiss Cargo Industries S.A. Inc.**, St. Jean, Quebec (CA)

(**) Term: **14 Years**

(21) Appl. No.: **29/363,571**

(22) Filed: **Jun. 11, 2010**

(51) **LOC (9) Cl.** **12-11**
(52) **U.S. Cl.** **D12/408**
(58) **Field of Classification Search** D12/406–408; 224/42.11, 515, 545, 519, 495, 502, 505, 224/506, 522, 535–537, 533, 567, 572, 324, 224/935, 421, 425–427, 496, 497, 499, 490–493, 224/924; 280/288.4, 304.5
See application file for complete search history.

(56) **References Cited**

U.S. PATENT DOCUMENTS

D294,564	S	*	3/1988	Stoecker	D12/408
D308,846	S	*	6/1990	Eckhart	D12/408
D337,087	S	*	7/1993	Peterman et al.	D12/408
5,259,542	A	*	11/1993	Newbold et al.	224/324
D378,289	S	*	3/1997	Lundgren	D12/412
5,775,555	A	*	7/1998	Bloemer et al.	224/531
D447,997	S	*	9/2001	Ferman et al.	D12/408
6,286,738	B1	*	9/2001	Robins et al.	224/314
6,616,023	B1	*	9/2003	Dahl et al.	224/537
6,644,525	B1	*	11/2003	Allen et al.	224/497
6,988,645	B1	*	1/2006	Nusbaum et al.	224/519
7,000,814	B2	*	2/2006	Wang	224/520
7,055,725	B1	*	6/2006	Kolda	224/505
7,213,731	B1	*	5/2007	Kolda	224/537
7,261,228	B2	*	8/2007	Prescott et al.	224/502
D602,420	S	*	10/2009	Kuschmeader et al.	D12/408
D614,563	S	*	4/2010	Flaherty et al.	D12/408
2007/0057001	A1	*	3/2007	Wang	224/536
2008/0093404	A1	*	4/2008	Clausen et al.	224/519
2009/0120986	A1	*	5/2009	Sautter et al.	224/497

* cited by examiner

Primary Examiner—Philip S Hyder
Assistant Examiner—Linda G. Brooks
(74) *Attorney, Agent, or Firm*—Husch Blackwell LLP

(57) **CLAIM**

The ornamental design for a hitch-mount bicycle carrier, as shown and described.

DESCRIPTION

FIG. **1** is a perspective view of the hitch-mount bicycle carrier.

FIG. **2** is a front elevational view of the hitch-mount bicycle carrier.

FIG. **3** is a rear elevational view of the hitch-mount bicycle carrier.

FIG. **4** is a right side elevational view of the hitch-mount bicycle carrier.

FIG. **5** is a left side elevational view of the hitch-mount bicycle carrier.

FIG. **6** is a top plan view of the hitch-mount bicycle carrier; and,

FIG. **7** is a bottom plan view of the hitch-mount bicycle carrier.

The broken lines immediately adjacent the shaded areas represent the bounds of the claimed design while all other broken lines are directed to environment and are for illustrative purposes only; the broken lines form no part of the claimed design.

1 Claim, 5 Drawing Sheets

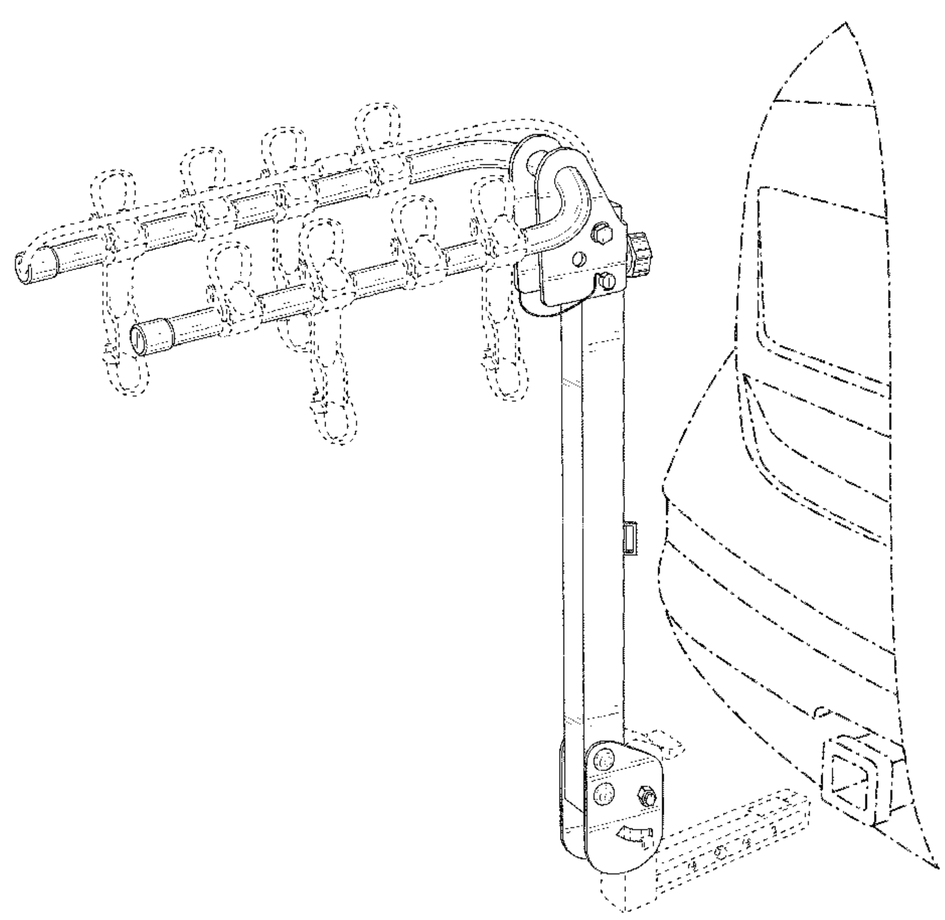

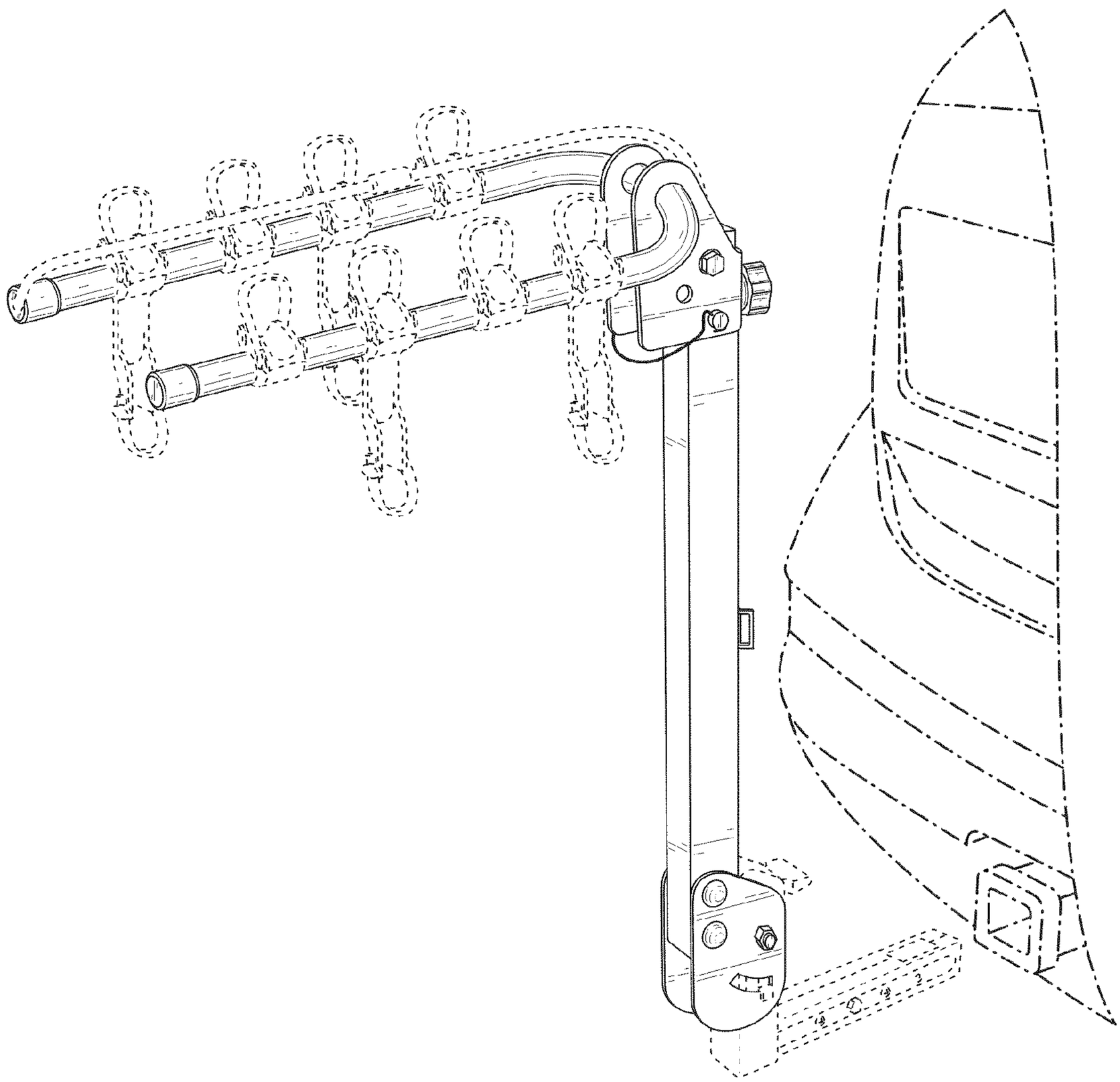

FIG. 1

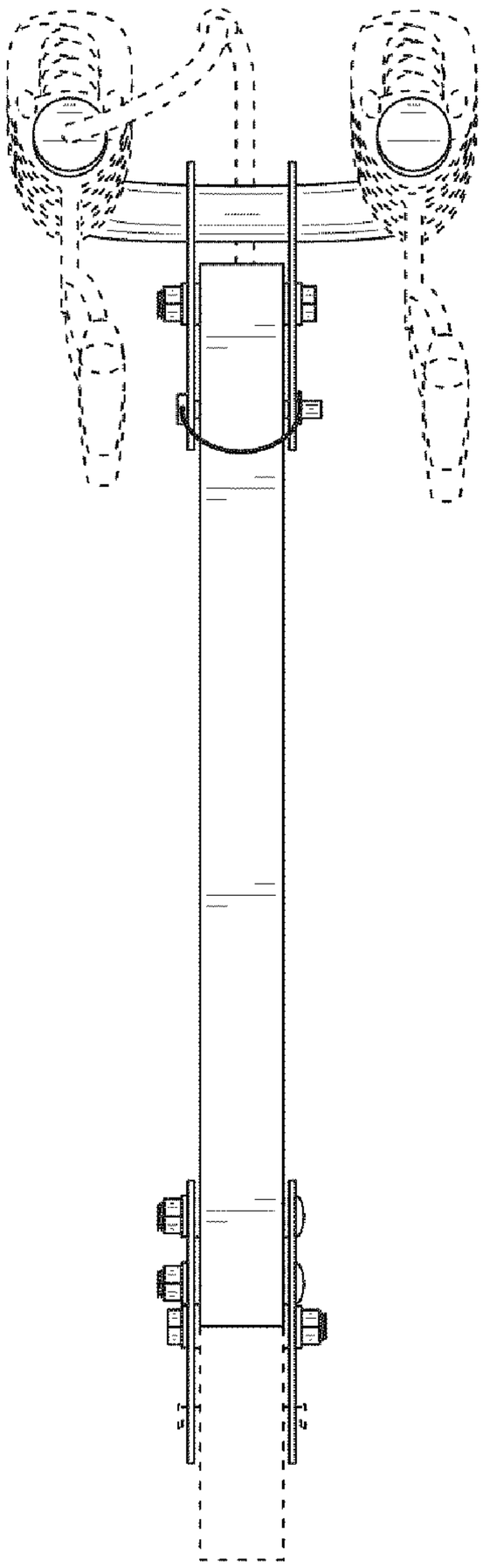

FIG. 2

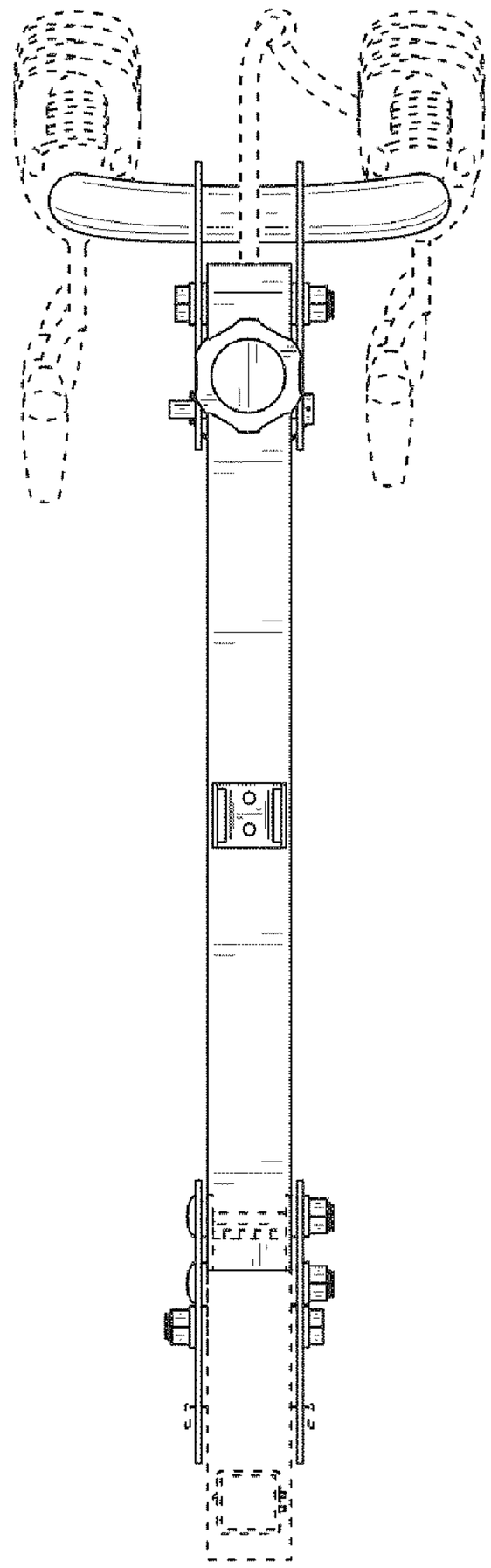

FIG. 3

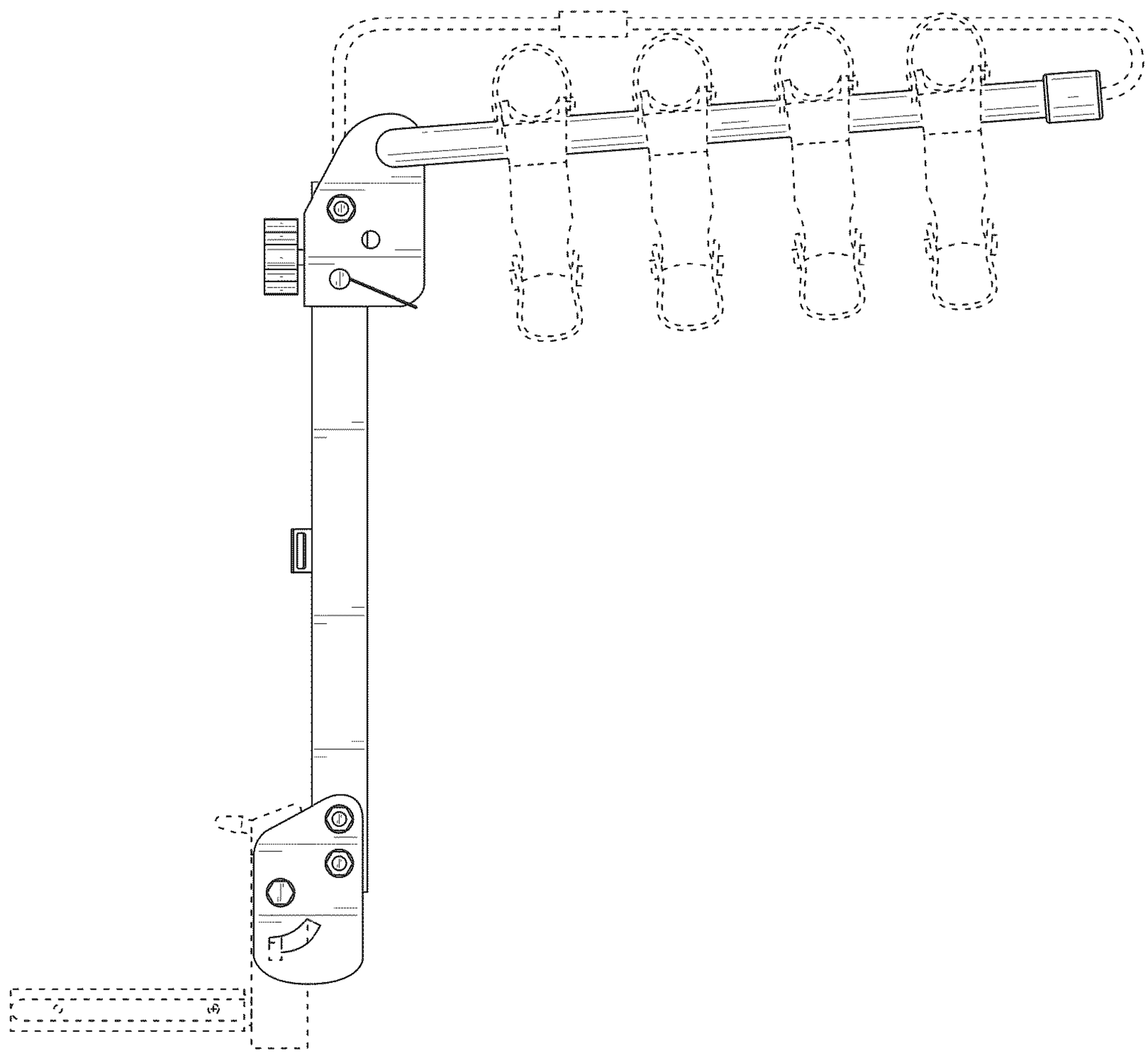

FIG. 4

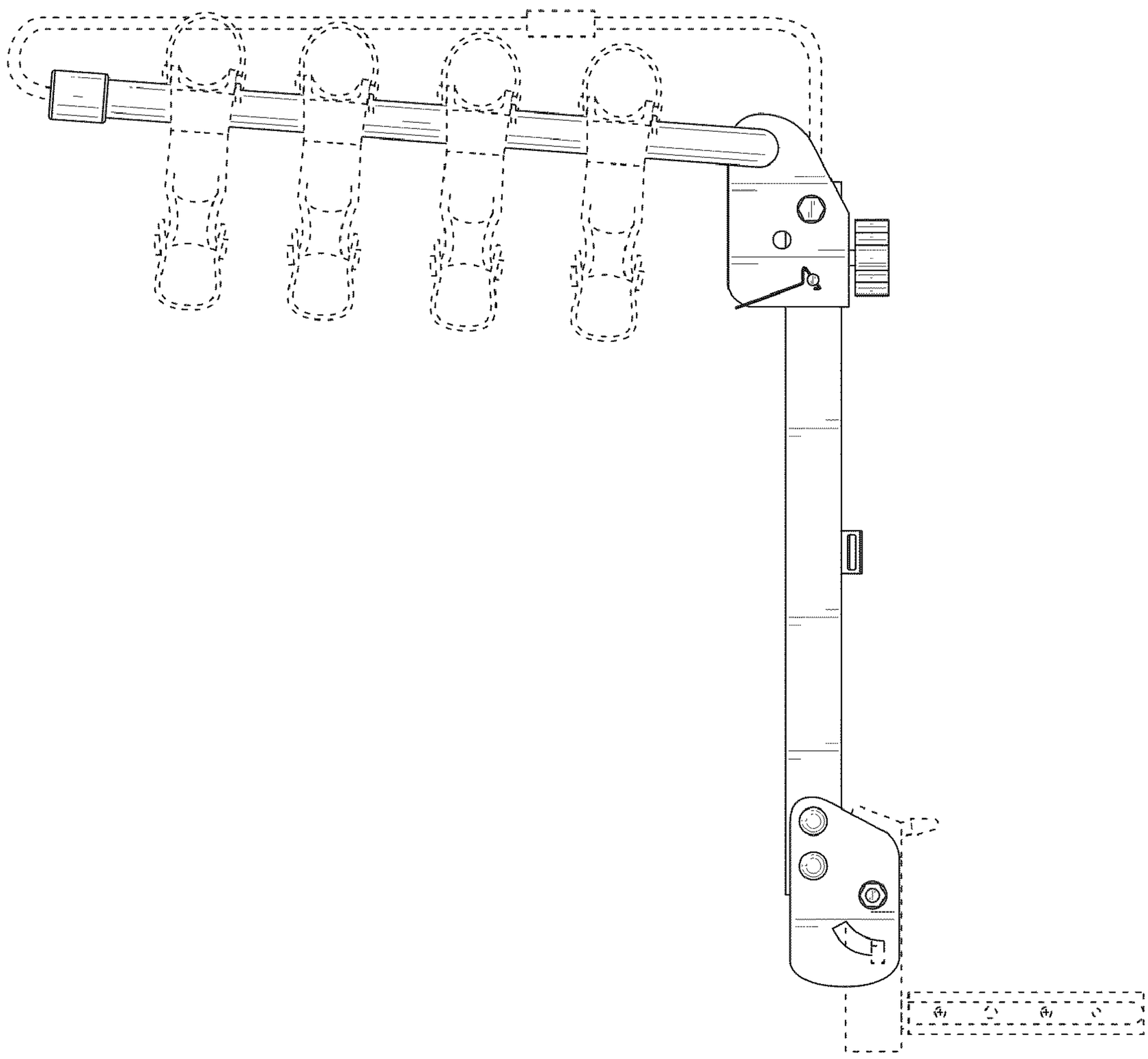

FIG. 5

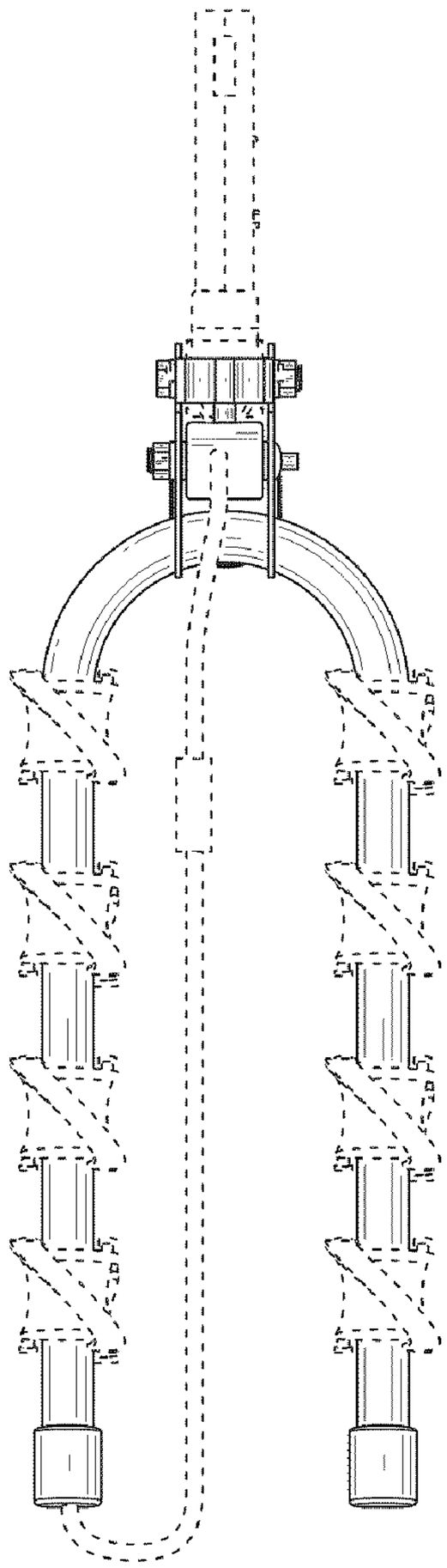

FIG. 6

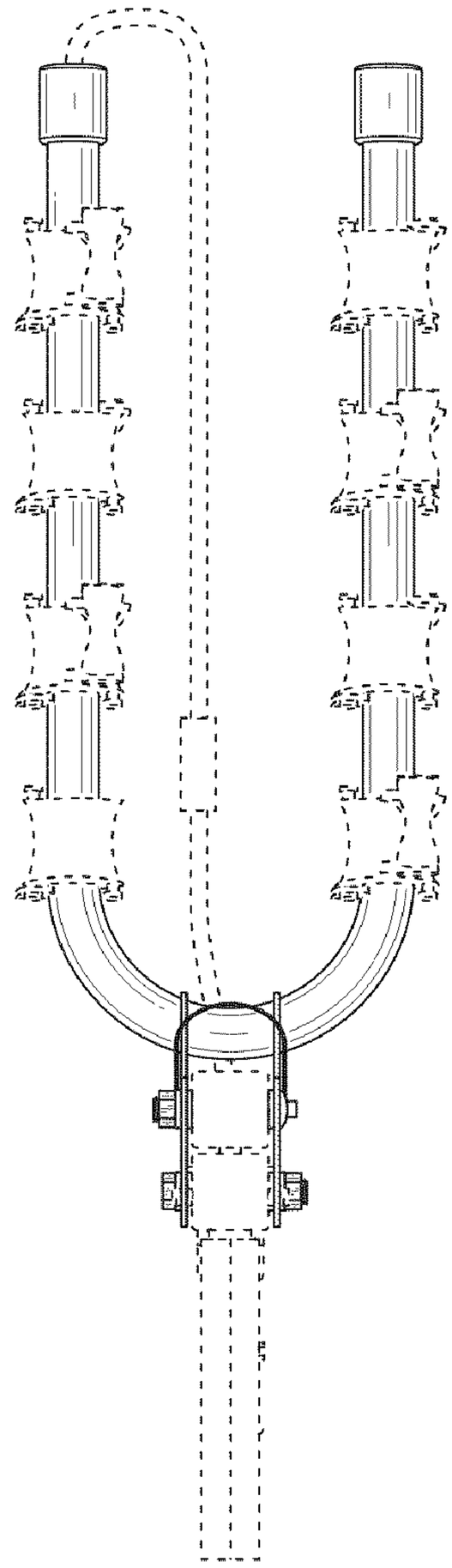

FIG. 7