US00D632958S

(12) United States Design Patent
Fuchs

(10) **Patent No.: US D632,958 S**
(45) **Date of Patent: ** Feb. 22, 2011**

(54) **CLOSURE SHELL**

(75) Inventor: **Timothy James Fuchs**, Perrysburg, OH (US)

(73) Assignee: **Rexam Closure Systems Inc.**, Perrysburg, OH (US)

(**) Term: **14 Years**

(21) Appl. No.: **29/364,301**

(22) Filed: **Jun. 22, 2010**

(51) **LOC (9) Cl.** **09-07**
(52) **U.S. Cl.** **D9/453**
(58) **Field of Classification Search** D9/651, D9/453, 452, 450, 449, 446, 443, 435; 222/83; 220/277; 215/252, 216, 206, 222, 219
See application file for complete search history.

(56) **References Cited**

U.S. PATENT DOCUMENTS

4,981,230	A *	1/1991	Marshall et al.	.....	215/252
D359,685	S *	6/1995	Luch	.....	D9/438
6,119,883	A *	9/2000	Hock et al.	.....	215/252
D460,357	S *	7/2002	Kras et al.	.....	D9/435
D465,731	S *	11/2002	Brant et al.	.....	D9/453
D481,314	S *	10/2003	Noonan	.....	D9/438
6,677,397	B1 *	1/2004	Baranowski et al.	.....	524/488
6,964,346	B1 *	11/2005	Taber et al.	.....	215/352
7,367,465	B2 *	5/2008	Taber et al.	.....	215/352
D584,149	S *	1/2009	Lohrman et al.	.....	D9/453
D584,619	S *	1/2009	Lohrman et al.	.....	D9/453
D606,864	S *	12/2009	Robinson	.....	D9/453
D615,864	S *	5/2010	Fuchs	.....	D9/453
2003/0098287	A1 *	5/2003	Taber et al.	.....	215/352
2009/0039083	A1 *	2/2009	Stull et al.	.....	220/257.1

* cited by examiner

Primary Examiner—Susan Bennett Hattan
(74) *Attorney, Agent, or Firm*—Reising Ethington PC

(57) **CLAIM**

I claim the ornamental design for a closure shell, as shown and described.

DESCRIPTION

FIG. **1** is a perspective view of a closure shell in accordance with of the present disclosure.

FIG. **2** is a top plan view of the closure shell in FIG. **1**, the bottom of the closure shell forming no part of the claimed design; and,

FIG. **3** is a front elevational view of the closure shell in FIGS. **1** and **2**, the opposing rear elevational view and the two side elevational views being identical to FIG. **3**.

1 Claim, 1 Drawing Sheet

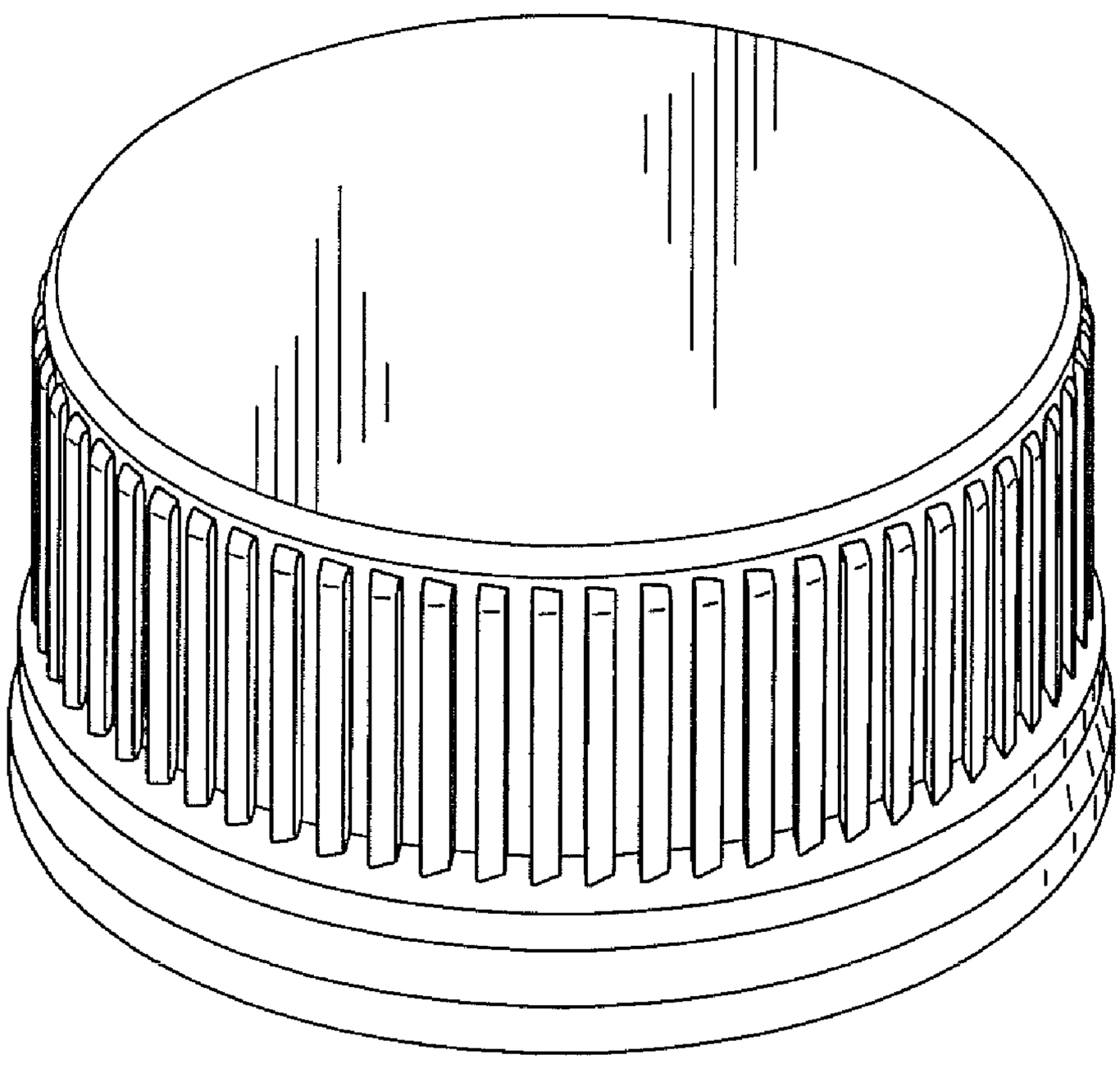

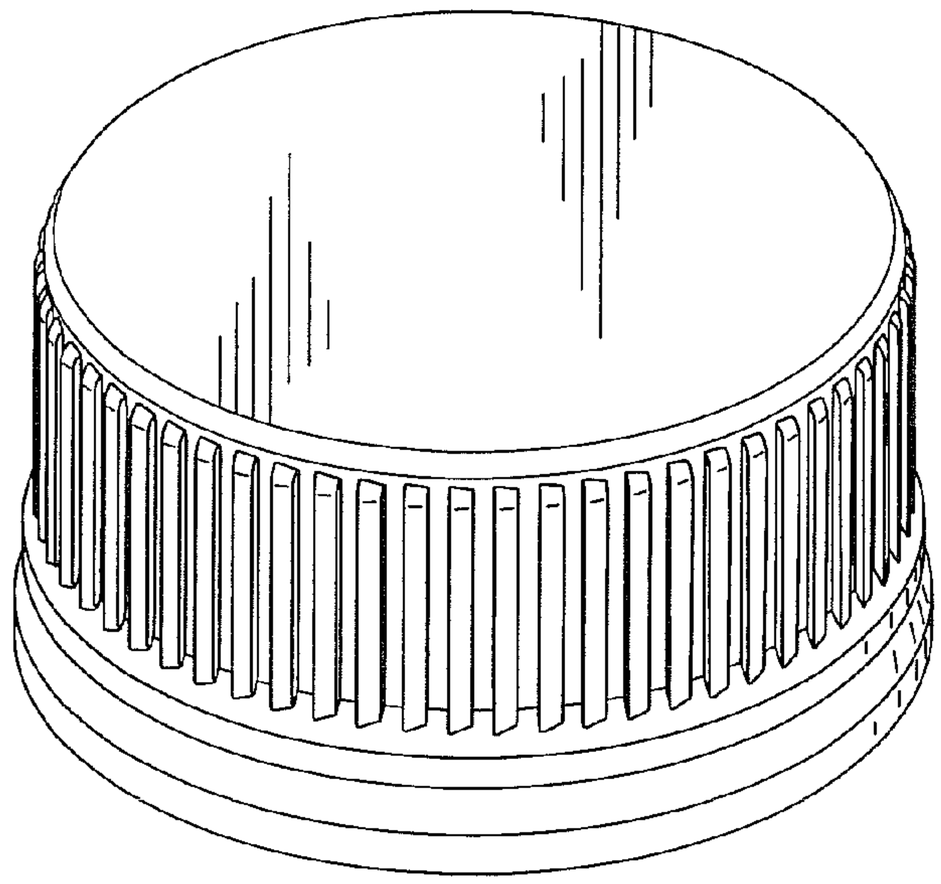

FIG. 1

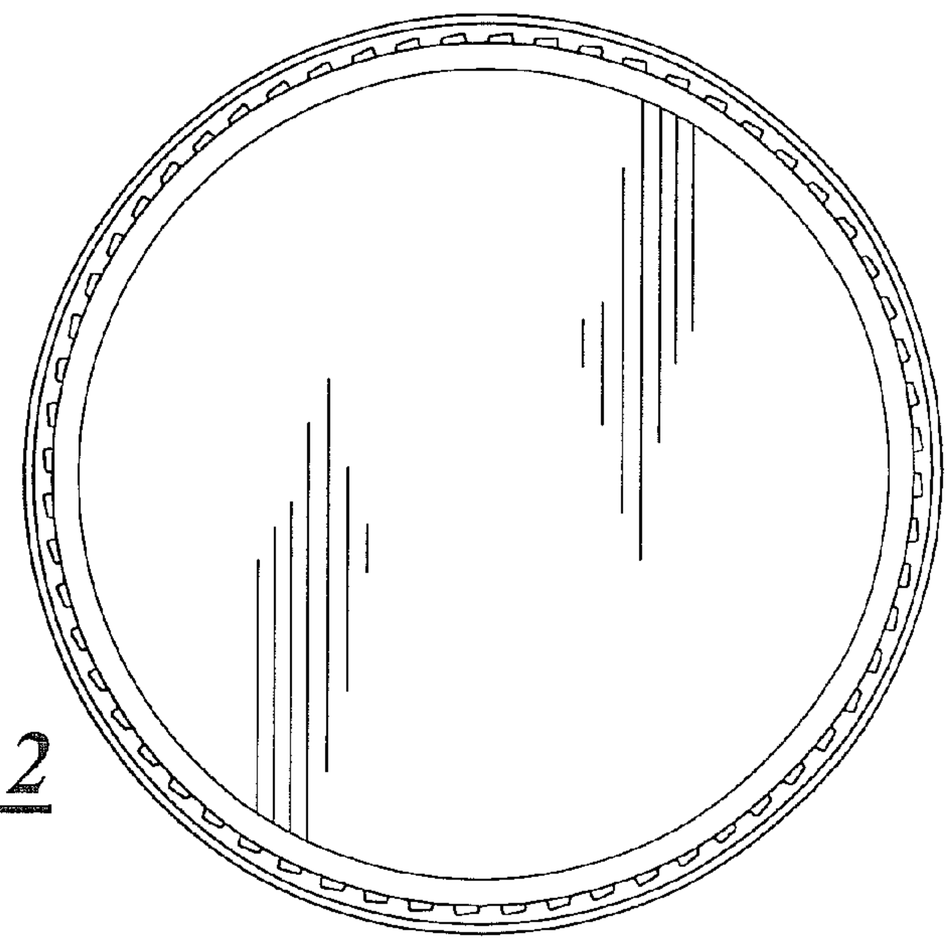

FIG. 2

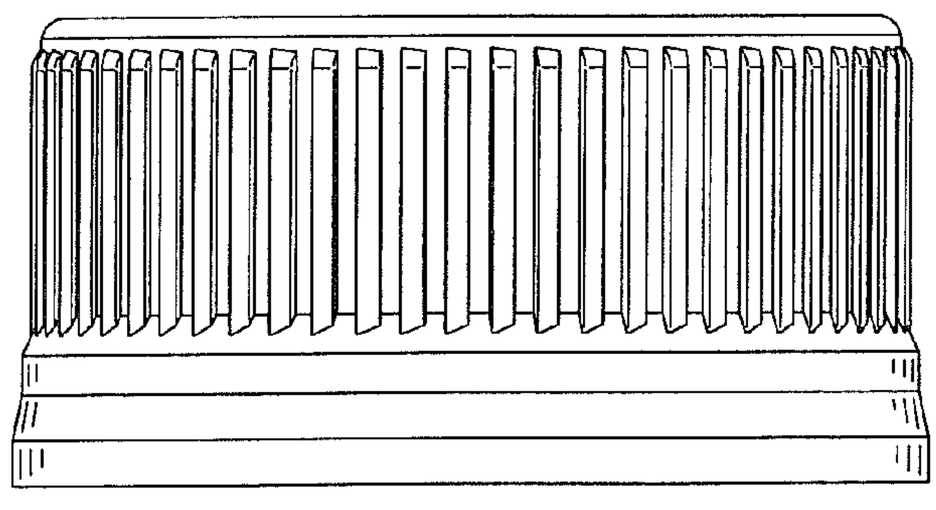

FIG. 3