US00D632649S

(12) United States Design Patent

Scheucher et al.

(10) Patent No.: US D632,649 S
(45) Date of Patent: ** Feb. 15, 2011

(54) **CORDLESS POWER SUPPLY**

(75) Inventors: **Karl F. Scheucher**, 7136 Eagle Rd., Waite Hill Village, OH (US) 44094; **Greg Guyette**, Tampa, FL (US)

(73) Assignee: **Karl F. Scheucher**, Waite Hill, OH (US)

(**) Term: **14 Years**

(21) Appl. No.: **29/266,852**

(22) Filed: **Sep. 29, 2006**

(51) **LOC (9) Cl.** **13-02**
(52) **U.S. Cl.** **D13/110**
(58) **Field of Classification Search** D13/110, D13/101, 102, 103, 107, 108, 118, 119, 123, D13/184, 199; 307/62, 82, 109, 150, 151; 320/104, 107, 111, 112, 113, 115, 132, 134, 320/150; 361/600, 601, 623; 429/96, 97, 429/98, 99, 100, 163, 170, 176
See application file for complete search history.

(56) **References Cited**

U.S. PATENT DOCUMENTS

3,178,669	A		4/1965	Roberts
D210,731	S	*	4/1968	Siegel D13/110
3,391,374	A		7/1968	Schleicher
3,543,043	A		11/1970	Dunn
4,193,660	A		3/1980	Jaconette
D276,495	S		11/1984	Sylvia
4,631,377	A		12/1986	Imazeki et al.
4,994,940	A		2/1991	Thouvenin et al.
5,187,423	A		2/1993	Marton
5,346,786	A		9/1994	Hodgetts
5,349,535	A		9/1994	Gupta
5,479,085	A		12/1995	Honda et al.
5,545,491	A		8/1996	Farley
5,563,493	A		10/1996	Matsuda et al.
5,631,536	A		5/1997	Tseng
5,694,019	A		12/1997	Uchida et al.
5,696,367	A		12/1997	Keith
5,711,648	A		1/1998	Hammerslag
5,773,977	A		6/1998	Dougherty
5,792,573	A		8/1998	Pitzen et al.
5,806,948	A		9/1998	Rowan et al.
5,847,537	A		12/1998	Parmley
D414,460	S	*	9/1999	Hughes D13/110
5,951,229	A		9/1999	Hammerslag
5,959,368	A		9/1999	Kubo et al.
5,998,963	A		12/1999	Aarseth
6,018,227	A		1/2000	Kumar et al.
D423,452	S	*	4/2000	Fujisawa et al. D13/110
D425,017	S	*	5/2000	Leung D13/110
6,085,836	A		7/2000	Burris et al.
6,087,806	A		7/2000	Fujoka
6,094,028	A		7/2000	Gu
6,140,798	A		10/2000	Krieger
6,150,823	A		11/2000	Takahashi et al.
6,154,006	A		11/2000	Hatanaka
6,157,162	A		12/2000	Hayashi
6,191,560	B1	*	2/2001	Sakakibara 320/150
6,350,149	B1		2/2002	Nakane
6,361,897	B1		3/2002	Snyder
6,445,158	B1		9/2002	Bertness et al.
6,465,986	B1		10/2002	Haba
6,498,454	B1		12/2002	Pinlam et al.
6,631,775	B1		10/2003	Chaney
D481,672	S	*	11/2003	Niwa et al. D13/103
D483,012	S		12/2003	Hsu
D484,458	S	*	12/2003	Garvis et al. D13/103
D490,051	S	*	5/2004	Kikumoto D13/102
6,773,849	B2		8/2004	Itoh et al.
6,788,025	B2		9/2004	Bertness et al.
6,841,293	B1		1/2005	Dreulle et al.
6,940,254	B2		9/2005	Nagamine
D511,744	S		11/2005	Hsu et al.
D512,373	S		12/2005	Tsai et al.
D514,060	S		1/2006	Wong et al.
D516,020	S		2/2006	Wong et al.
D524,728	S		7/2006	Watson
7,157,882	B2		1/2007	Johnson et al.
7,157,883	B2		1/2007	Johnson et al.
7,164,257	B2		1/2007	Johnson et al.
D537,408	S		2/2007	Aglassinger
7,176,654	B2		2/2007	Meyer et al.
7,193,392	B2		3/2007	King et al.
D545,759	S		7/2007	Ino et al.
7,245,108	B2		7/2007	Chertok et al.
7,256,516	B2		8/2007	Buchannan
D557,203	S		12/2007	Grunow et al.
7,313,469	B2		12/2007	Wobben
D559,175	S		1/2008	Houghton

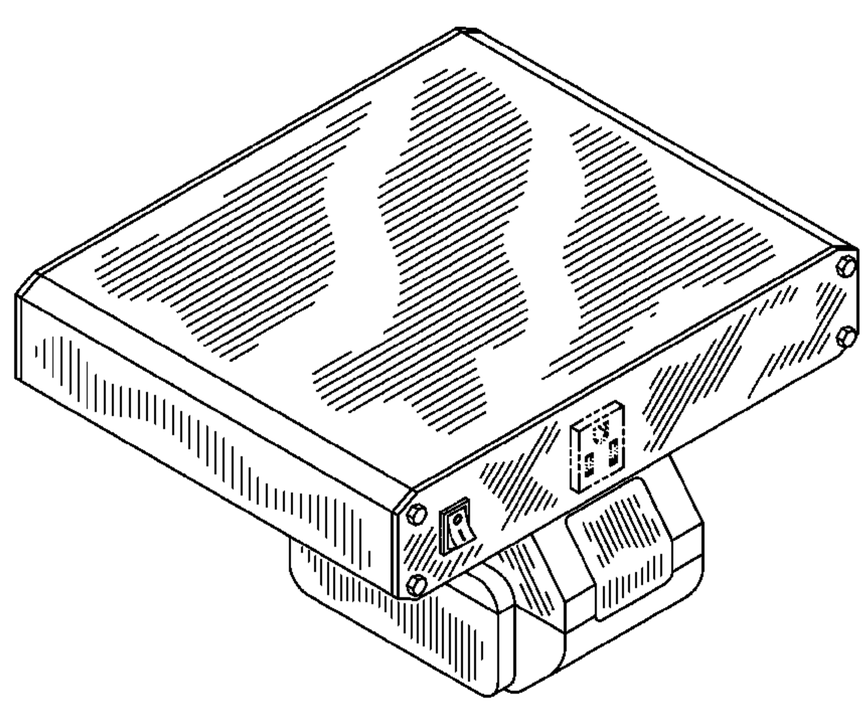

D562,228	S	2/2008	Okada et al.
7,327,122	B2	2/2008	Kamenoff
7,342,381	B2	3/2008	Johnson et al.
D568,239	S	5/2008	Okada et al.
7,378,818	B2	5/2008	Fowler et al.
7,492,124	B2	2/2009	Johnson et al.
7,504,804	B2	3/2009	Johnson et al.
7,507,500	B2	3/2009	Donnelly
7,508,167	B2	3/2009	Meyer et al.
7,554,290	B2	6/2009	Johnson et al.
7,557,534	B2	7/2009	Uehlein-Proctor
7,557,535	B2	7/2009	Johnson et al.
7,567,058	B2	7/2009	Shimizu et al.
D601,088	S	9/2009	Scheucher
7,589,500	B2	9/2009	Johnson et al.
7,609,027	B2	10/2009	Zick et al.
2001/0020838	A1	9/2001	Malackowski
2002/0025471	A1	2/2002	Valdez
2002/0096323	A1	7/2002	Burris et al.
2002/0152476	A1	10/2002	Anderson et al.
2003/0143455	A1	7/2003	Partington et al.
2004/0160214	A1	8/2004	Blair et al.
2004/0201362	A1	10/2004	Borrego Bel et al.
2004/0257038	A1	12/2004	Johnson et al.
2004/0263119	A1	12/2004	Meyer et al.
2005/0007068	A1	1/2005	Johnson et al.
2005/0017690	A1	1/2005	Kamenoff
2005/0258801	A9	11/2005	Johnson et al.
2006/0012342	A1	1/2006	Kamenoff
2006/0028167	A1	2/2006	Czubay et al.
2006/0091858	A1	5/2006	Johnson et al.
2006/0103357	A1	5/2006	Johnson et al.
2006/0108975	A1	5/2006	Meyer et al.
2006/0108983	A1	5/2006	Meyer et al.
2006/0108984	A1	5/2006	Johnson et al.
2006/0267547	A1	11/2006	Godovich
2007/0103109	A1	5/2007	Meyer et al.
2007/0103116	A1	5/2007	Johnson et al.
2007/0103121	A1	5/2007	Johnson et al.
2007/0108942	A1	5/2007	Johnson et al.
2007/0182158	A1	8/2007	Cerney et al.
2007/0184339	A1	8/2007	Scheucher
2007/0188130	A1	8/2007	Scheucher
2007/0188137	A1	8/2007	Scheucher
2007/0273334	A1	11/2007	Meyer et al.
2008/0008928	A1	1/2008	Partin et al.
2008/0008933	A1	1/2008	Lampe-Onnerud et al.
2008/0012530	A1	1/2008	Johnson et al.
2008/0018303	A1	1/2008	Scheucher
2008/0053716	A1	3/2008	Scheucher
2008/0079264	A1	4/2008	Serdynski et al.
2008/0185993	A1	8/2008	Johnson et al.
2008/0213652	A1	9/2008	Scheucher
2009/0029193	A1	1/2009	Onnerud et al.
2009/0086043	A1	4/2009	Scheucher
2009/0087729	A1	4/2009	Johnson et al.
2009/0153101	A1	6/2009	Meyer et al.
2009/0181296	A1	7/2009	Lampe-Onnerud et al.

FOREIGN PATENT DOCUMENTS

DE	2558456	A	6/1977
EP	662725	A1	12/1995
JP	043544181	A	12/1992
JP	07059124	A	3/1995
WO	2007/092955	A2	8/2007
WO	2007/092955	A3	6/2008
WO	2009009176	A2	1/2009
WO	2009009176 ISR	A3	3/2009

OTHER PUBLICATIONS

U.S. Appl. No. 12/697,289, filed Jan. 31, 2010, Inventor Name: Karl Scheucher.

McDowellresearch, MRC-34, 2 pages, Website, HTTP://WWW.MCDOWELLRESEARCH.COM/DATASHEET.PHP?ID=MRC-34.

McDowellresearch, Briefcase Power System, 1 page, Website, HTTP://WWW.MCDOWELLRESEARCH.COM/subcategory.php?ID=21.

Automated Business Power, Uninterruptible Power Supply for Javelin CLU, 1 page, Website,http://www.abpco.com/Uninterruptible_Power_Supply_JAVELIN_CLU.shtml.

Automated Business Power, Uninterruptible Power Transceiver Power Unit Applications,2 Pages Website, http://www.abpco.com/Uninterruptible_Power_Supply_Transceiver_Battery_Eliminator_App.shtml.

Automated Business Power, Uninterruptible Power Supply Transceiver Battery Eliminator Applications,2 Pages Website, HTTP://WWW.ABPCO.COM/UNINTERRUPTIBLE_POWER_SUPPLY_TRANSCEIVER_BATTERY_ELIMINATOR_APP.SHTML.

Motorola, Inc. WMC7300, 2006, pp. 1-2, Maitland, Florida 32794-8133, http://www.motorola.com/mesh/pdf/data_sheet_wmc7300.pdf.

Motorola, Inc. IAP 7300, 2006, pp. 1-2, www.motorola.com/mesh, Maitland, Florida 32794-8133, http://www.motorola.com/mesh/pdf/data_sheet_iap7300.pdf.

International Rectifier, IRF7240 HEXFET Power MOSFET, Mar. 6, 2001, IR World Headquarters: 233 Kansas St., El Segundo, California 90245, www.irf.com.

Diodes Incorporated, PDS1040CTL, Diodes Incorporated. pp. 1-3, www.diodes.com.

Panasonic, Multilayer Chip NTC Thermistors, pp. 1-4.

Kerchner, George A. "Battery Power Online" 2001, Webcom Communications Corp. http://www.batterypoweronline.com/july02Li-IonRegulations.htm.

PowerGate LLC, "Cosel 150 Watt Enclosed Single Output Switcher" pp. 1-2, PowerGate LLC 3000 Coronado Dr. Santa Clara, CA 95054.

ACON, Inc., "MH Series, 100-300W" Oct. 21, 2004, pp. 1-17, www.aconinc.com.

CD Media Corporation, "150W DC to AC Power Inverter" 1999-2005, 1 page, http://www.hobbyracer.com/kv-150htm.

National Semiconductor, "LM2936-3.3 Ultra-Low Quiescent Current 3.3V Regulator", Jun. 2002, pp. 1-10, DS101324, National Semiconductor Corporation, WWW.NATIONAL.COM.

Texas Instruments, "MSP430X15X", SLAS368B, Mar. 2004, pp. 1-64, Texas Instruments, Dallas, Texas.

Transistor Devices, Inc. "2 KW Scaleable Li-Ion AC UPS", Website http://www.tdipower.com/360/ups/ups_360.html, 1 page.

Nexergy, "Portable Power Solutions: Designing The Optimal Portable Power System" pp. 1-8, http://www.nexergy.com/pdf/Designing_Optimal_PPwr.pdf.

Nass, Richard, "Extending Battery Life" EE Times, Jan. 6, 1997, pp. 1-4, http://www.nexergy.com/extending-battery-life.htm.

Motorola, Inc. MWR7300, 2006, pp. 1-2, Motorola Maitland, Florida 32794-8133,http://www.motorola.com/mesh/pdf/data_sheet_mwr7300.pdf.

Motorola, Inc. VMM7300, 2006, pp. 1-2, Motorola Maitland, Florida 32794-8133, http://www.motorola.com/mesh/pdf/data_sheet_vmm7300.pdf.

U.S. Appl. No. 60/951,669, filed Jul. 24, 2007; Inventor Name: Toby Thomas.

U.S. Appl. No. 60/909,873, filed Apr. 3, 2007; Inventor Name: David L. Hoelscher, 28 Pages.

U.S. Appl. No. 60/771,771, filed Feb. 9, 2006; Inventor Name: Karl Scheucher.

U.S. Appl. No. 60/952,240, filed Jul. 26, 2007; Inventor Name: Karl Scheucher.

U.S. Appl. No. 60/911,564, filed Apr. 13, 2007; Inventor Name: Karl Scheucher.

U.S. Appl. No. 60/848,148, filed Sep. 29, 2006; Inventor Name: Karl Scheucher.

U.S. Appl. No. 60/781,959, filed Mar. 12, 2006; Inventor Name: Karl Scheucher.

U.S. Appl. No. 60/855,958, filed Nov. 1, 2006; Inventor Name: Karl Scheucher.

U.S. Appl. No. 60/857,079, filed Nov. 6, 2006; Inventor Name: Karl Scheucher.
U.S. Appl. No. 61/148,395, filed Jan. 30, 2009; Inventor Name: Karl Scheucher.
Watson, R.L. et al. "Refueling Infrastructure For an All-Electric Car Fleet"; Transport and Road Research Labratory: Research Report 66: 1986; 34 Pages; ISSN 0266-5247; HOBBS the printers of Southampton, UK.
Meissner, E. et al. "Battery Monitoring and Electrical Energy Management Precondition for future vehicle electric power systems"; Journal of Power Sources; 2003; pp. 79-98; 116; Elsevier Science B.V., Amsterdam 1043, NX.
Santhanagopalan, S. et al. "Online Estimation of the state of charge of a lithium ion cell". Journal of Power Sources; Jun. 19, 2006; pp. 1346-1355; 161; Elsevier Science B.V., Amsterdam 1043, NX.
Plett, G. L. "Extended Kalman filtering for battery management systems of LiPB-based HEV batter packs". Journal of Power Sources; Jun. 9, 2004; pp. 252-292; Elsevier Science B.V., Amsterdam 1043, NX.

* cited by examiner

Primary Examiner—Stella M Reid
Assistant Examiner—Derrick Holland
(74) *Attorney, Agent, or Firm*—Woodling, Krost and Rust

(57) **CLAIM**

The ornamental design for a cordless power supply, as shown and described.

DESCRIPTION

FIG. **1** is a front perspective view of a cordless power supply showing our new design;

FIG. **2** is a left side elevation view thereof;

FIG. **3** is a right side elevation view thereof;

FIG. **4** is a top plan view thereof;

FIG. **5** is a bottom plan view thereof;

FIG. **6** is a front elevation view thereof;

FIG. **7** is a rear elevation view thereof;

FIG. **8** is a front perspective view of a second embodiment of a cordless power supply showing our new design;

FIG. **9** is a left side elevation view thereof;

FIG. **10** is a right side elevation view thereof;

FIG. **11** is a top plan view thereof;

FIG. **12** is a bottom plan view thereof;

FIG. **13** is a front elevation view thereof;

FIG. **14** is a rear elevation view thereof;

FIG. **15** is a front perspective view of a third embodiment of a cordless power supply showing our new design;

FIG. **16** is a left side elevation view thereof;

FIG. **17** is a right side elevation view thereof;

FIG. **18** is a top plan view thereof;

FIG. **19** is a bottom plan view thereof;

FIG. **20** is a front elevation view thereof;

FIG. **21** is a rear elevation view thereof;

FIG. **22** is a front perspective view of a fourth embodiment of a cordless power supply showing our new design;

FIG. **23** is a left side elevation view thereof;

FIG. **24** is a right side elevation view thereof;

FIG. **25** is a top plan view thereof;

FIG. **26** is a bottom plan view thereof;

FIG. **27** is a front elevation view thereof;

FIG. **28** is a rear elevation view thereof;

FIG. **29** is a front perspective view of a fifth embodiment of a cordless power supply showing our new design;

FIG. **30** is a left side elevation view thereof;

FIG. **31** is a right side elevation view thereof;

FIG. **32** is a top plan view thereof;

FIG. **33** is a bottom plan view thereof;

FIG. **34** is a front elevation view thereof; and,

FIG. **35** is a rear elevation view thereof.

The broken lines shown represent unclaimed subject matter and form no part of the claimed design.

1 Claim, 20 Drawing Sheets

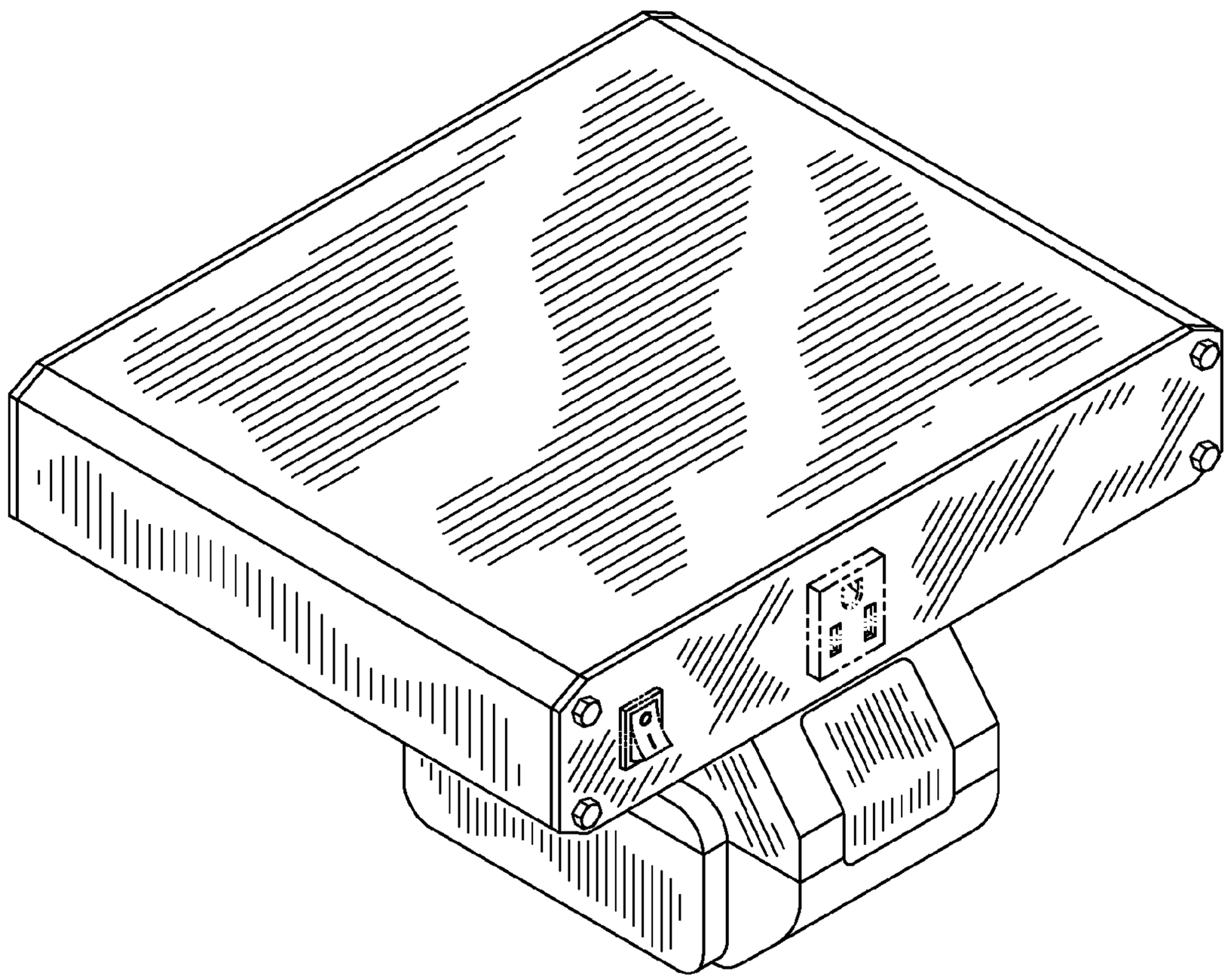

FIG. 1

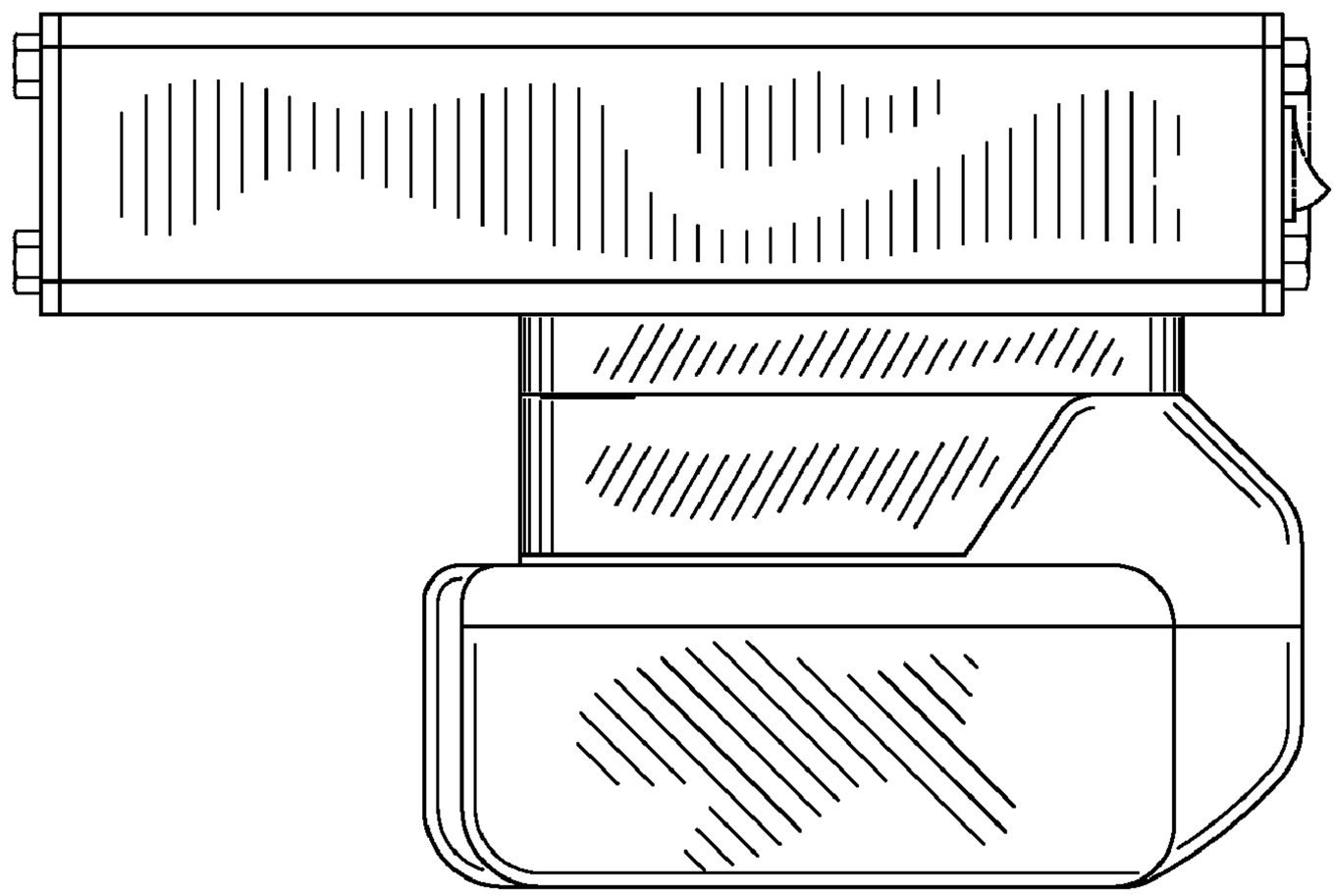

FIG. 2

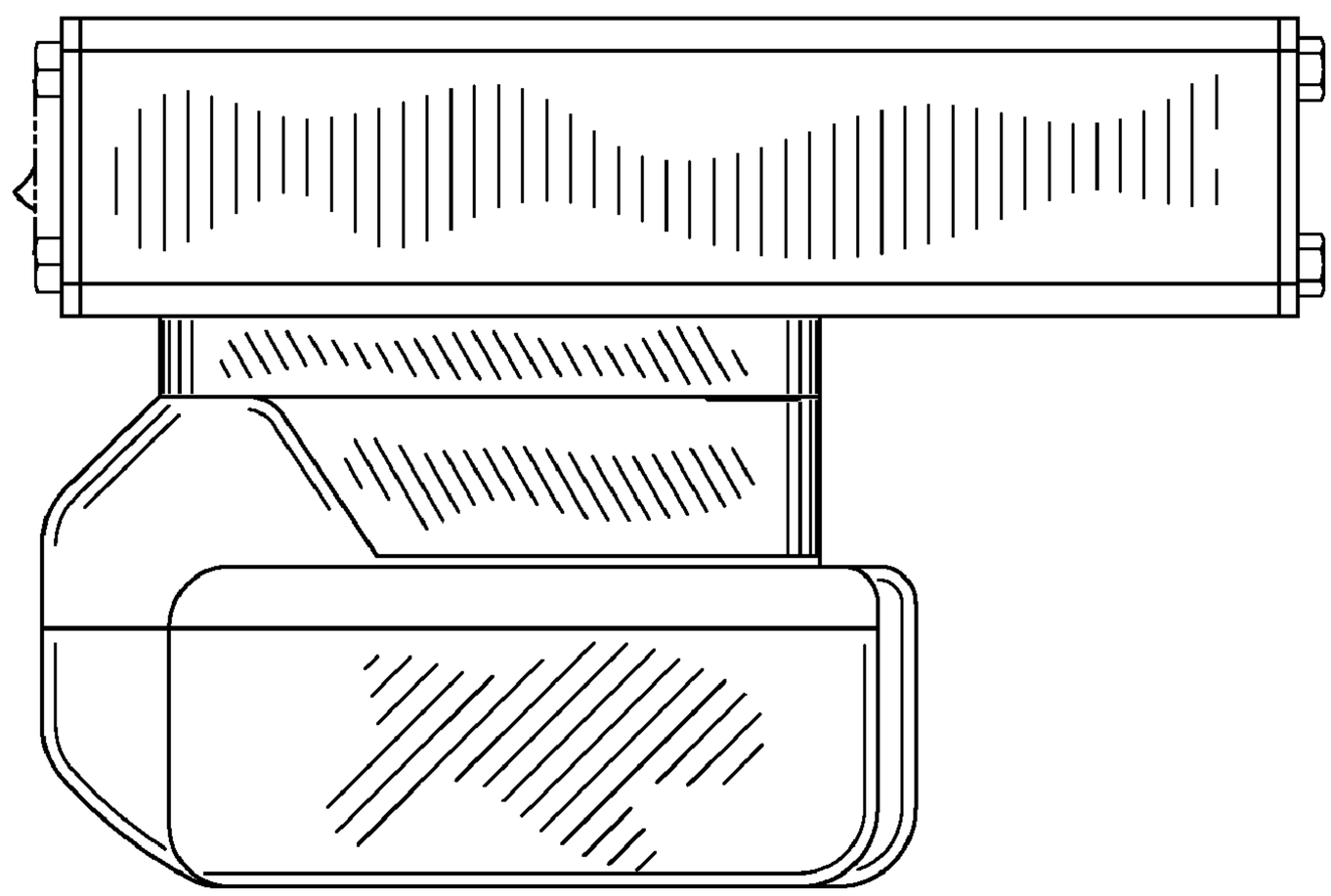

FIG. 3

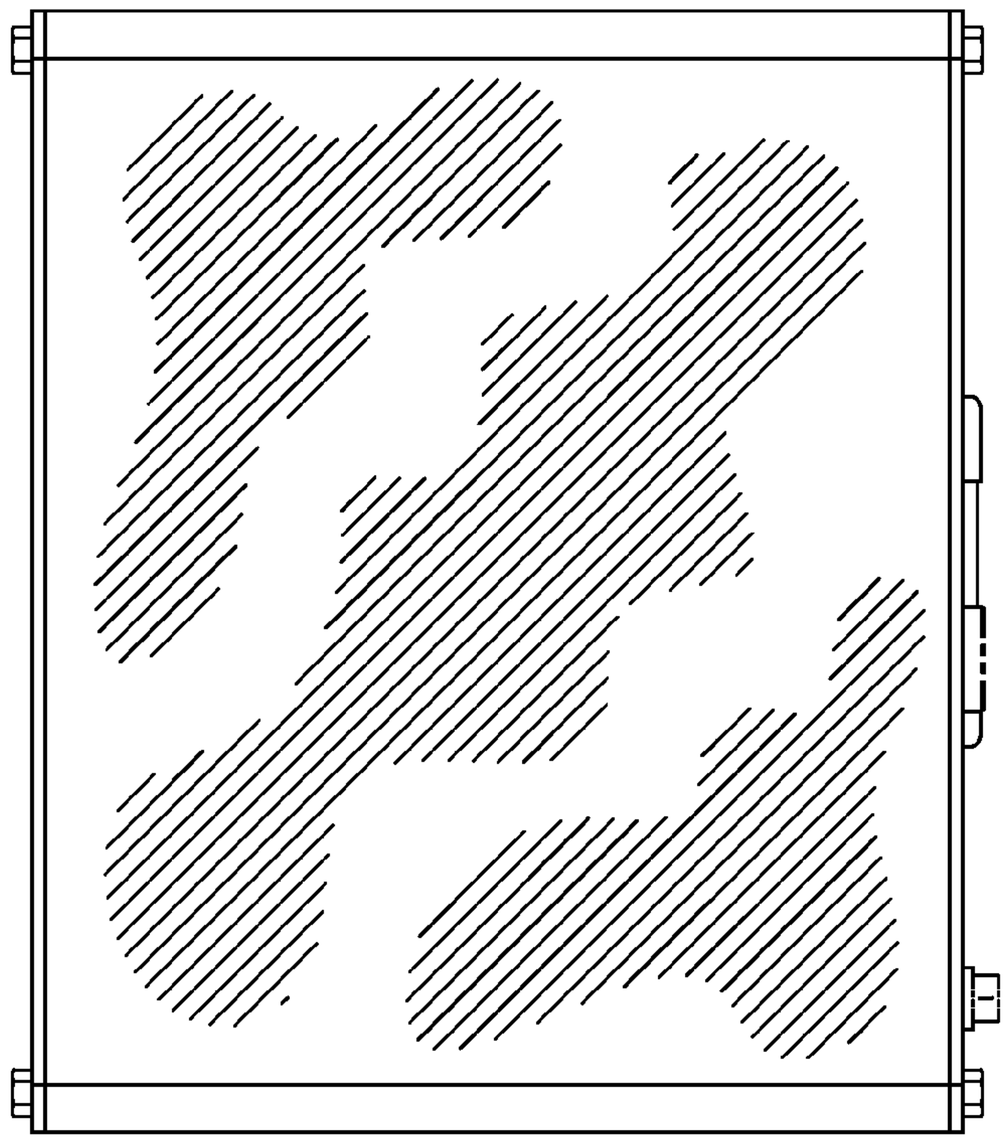

FIG. 4

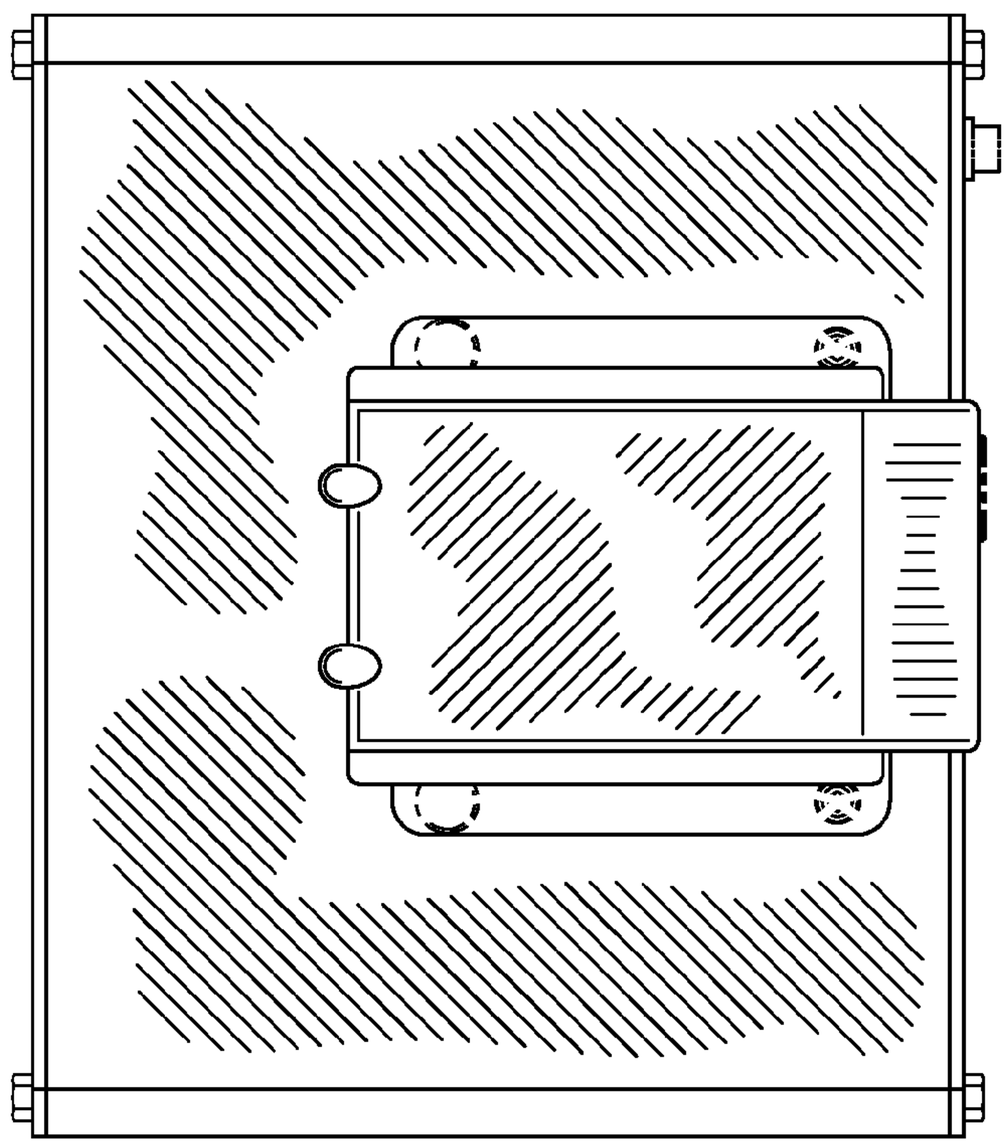

FIG. 5

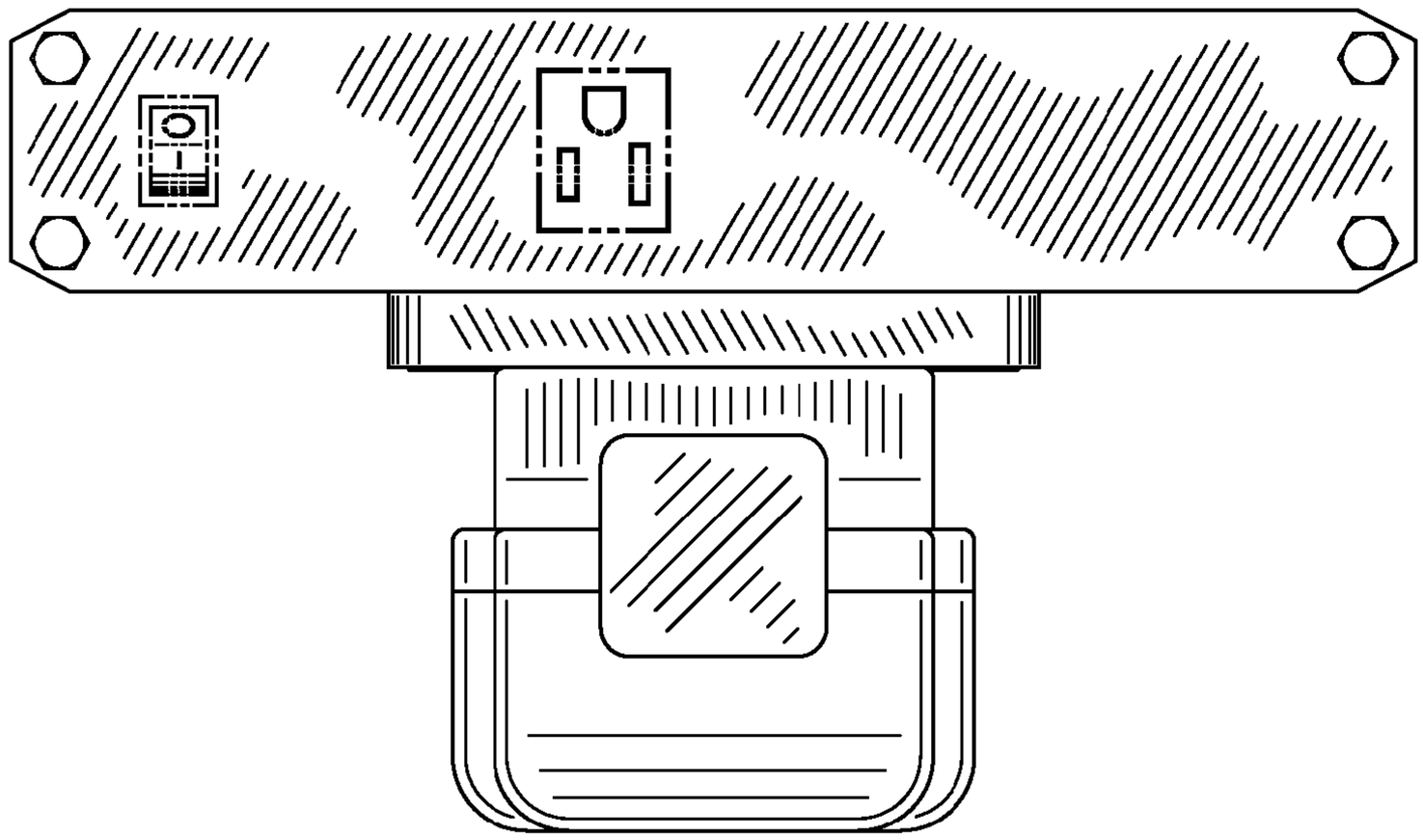

FIG. 6

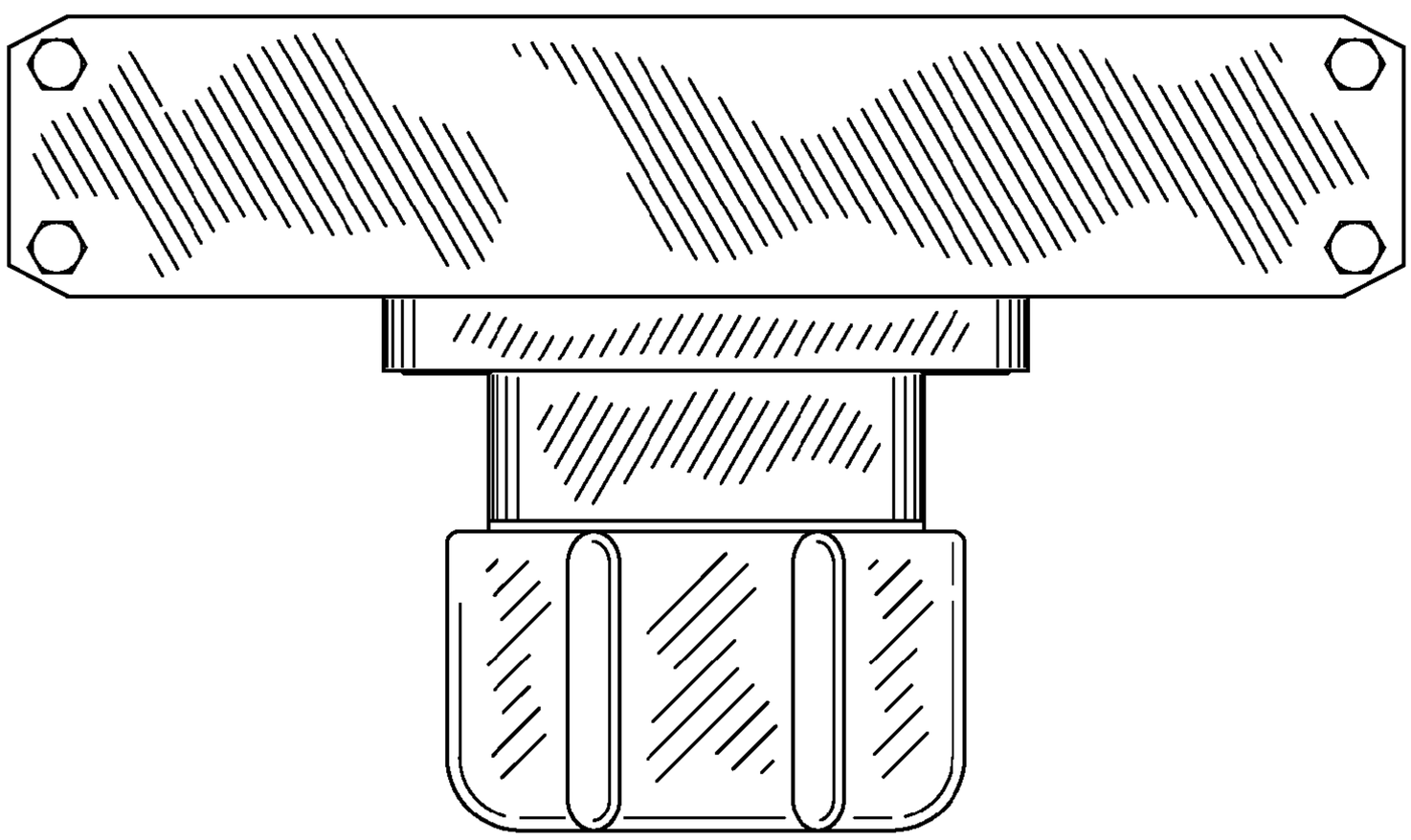

FIG. 7

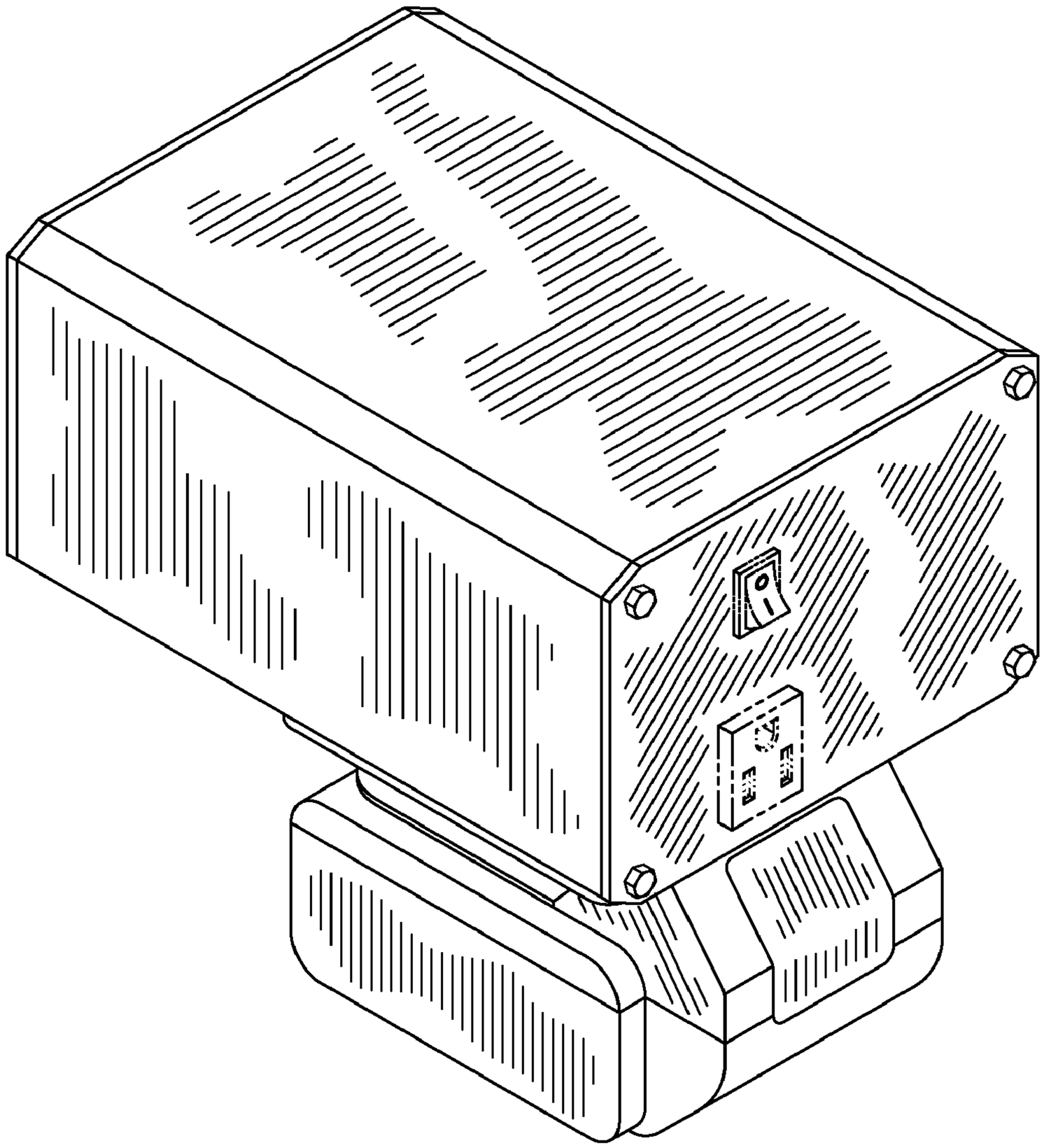

FIG. 8

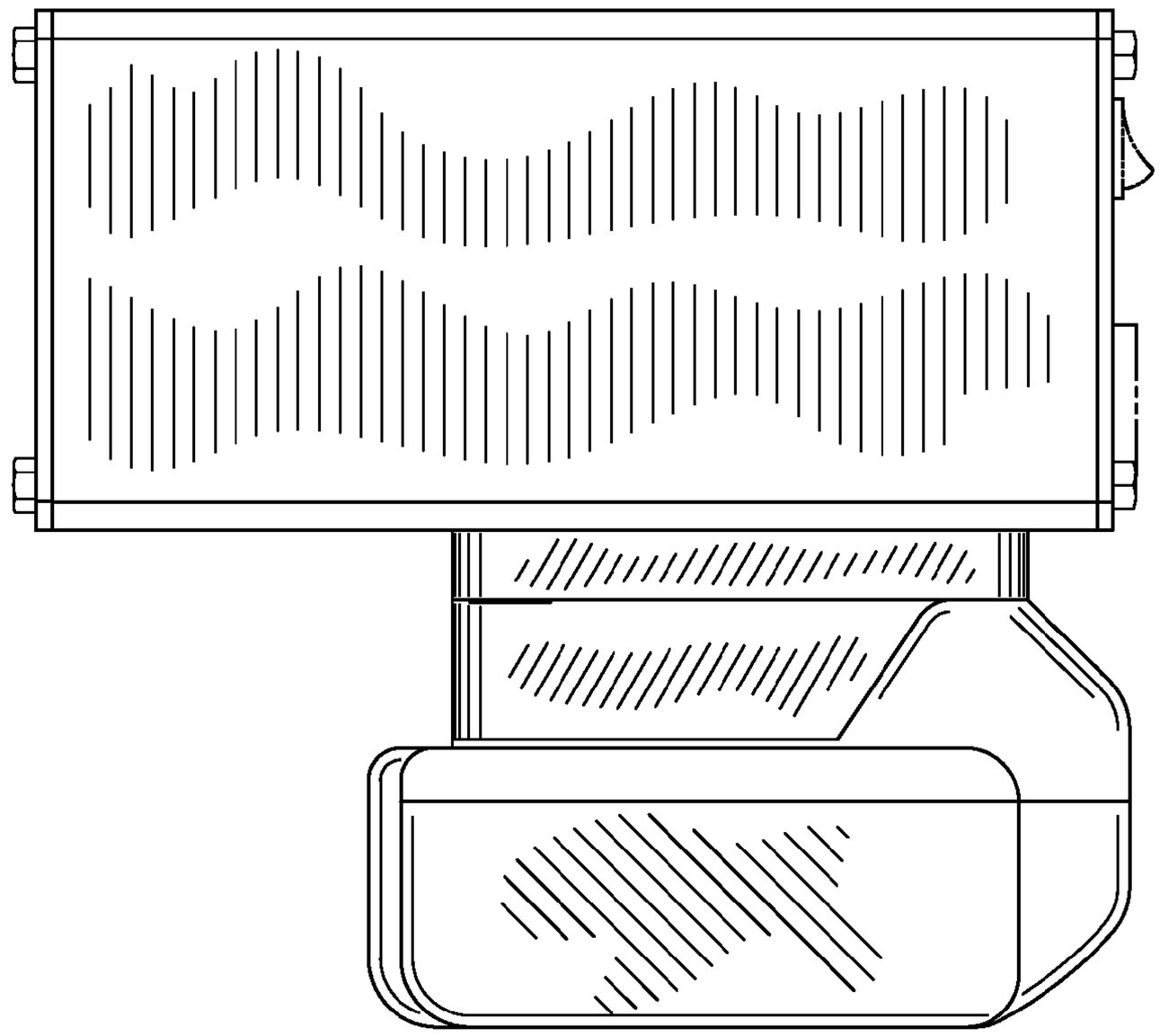

FIG. 9

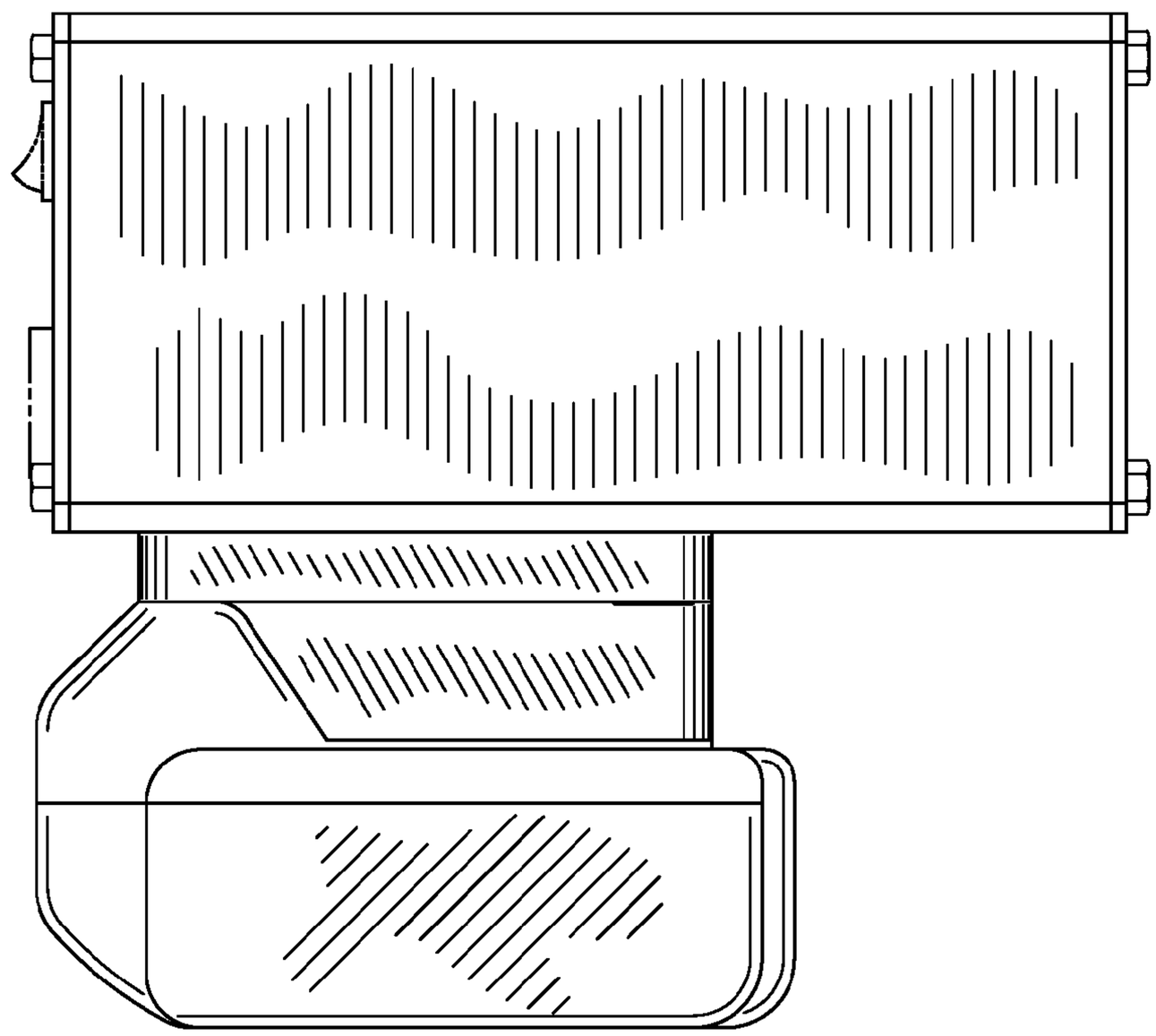

FIG. 10

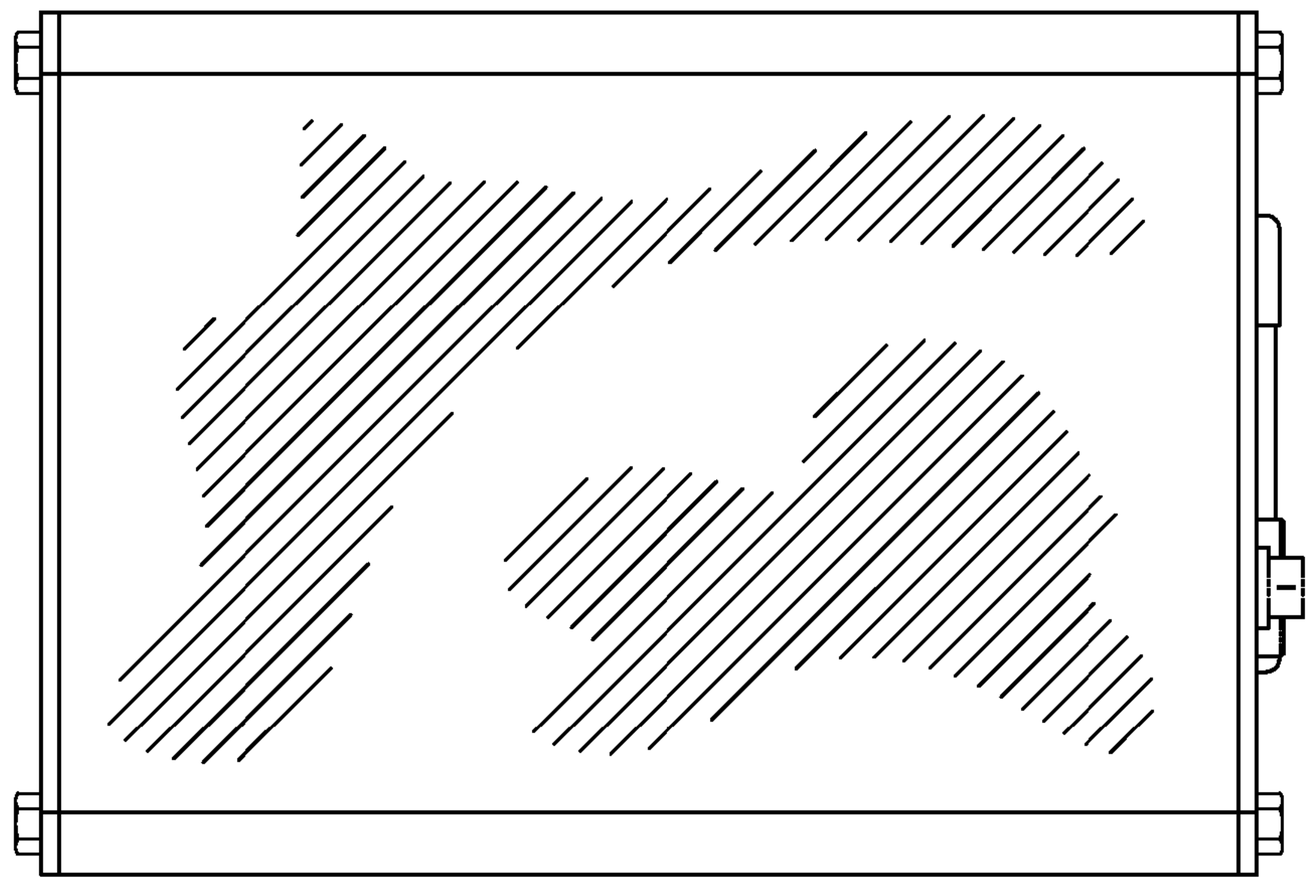

FIG. 11

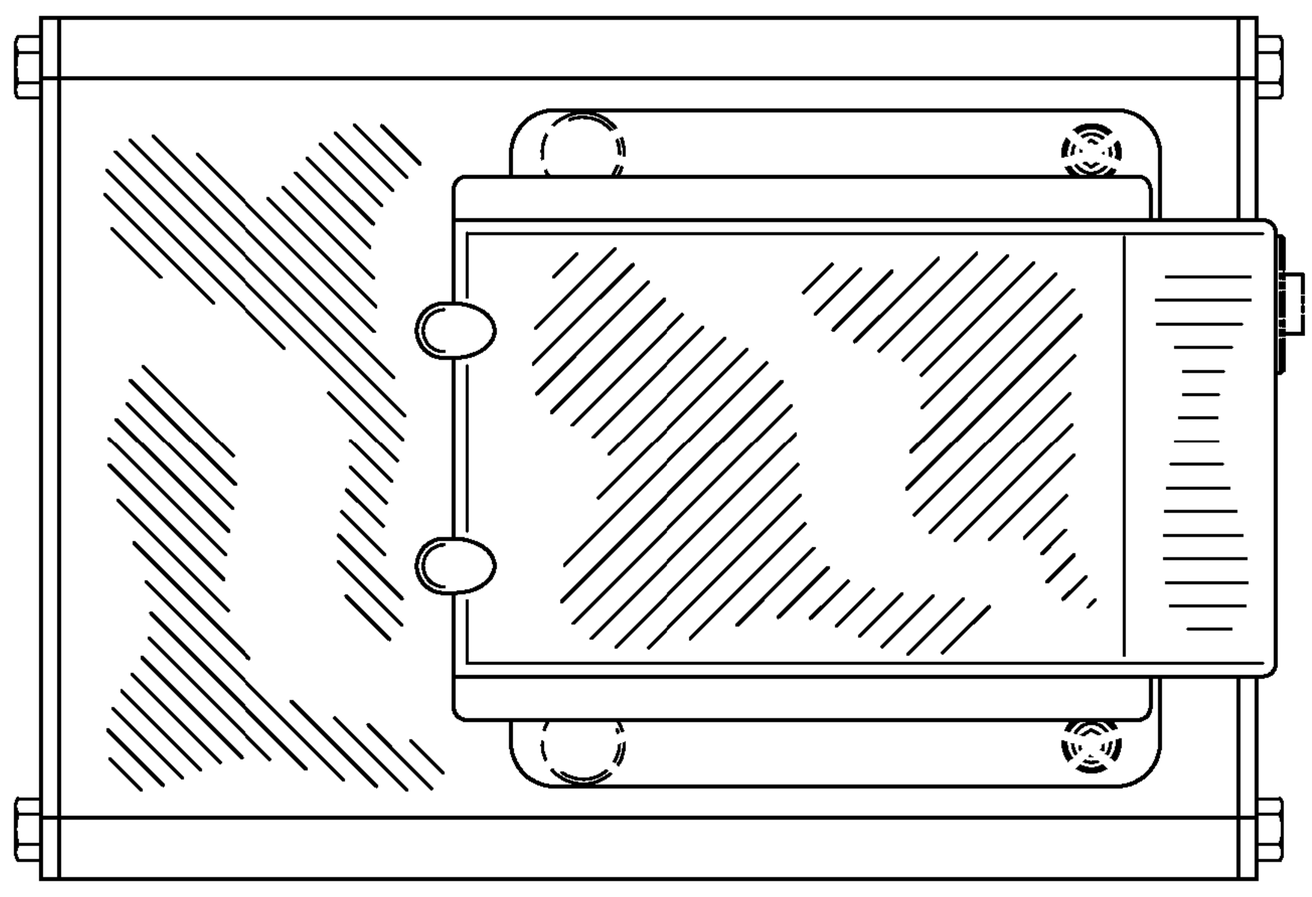

FIG. 12

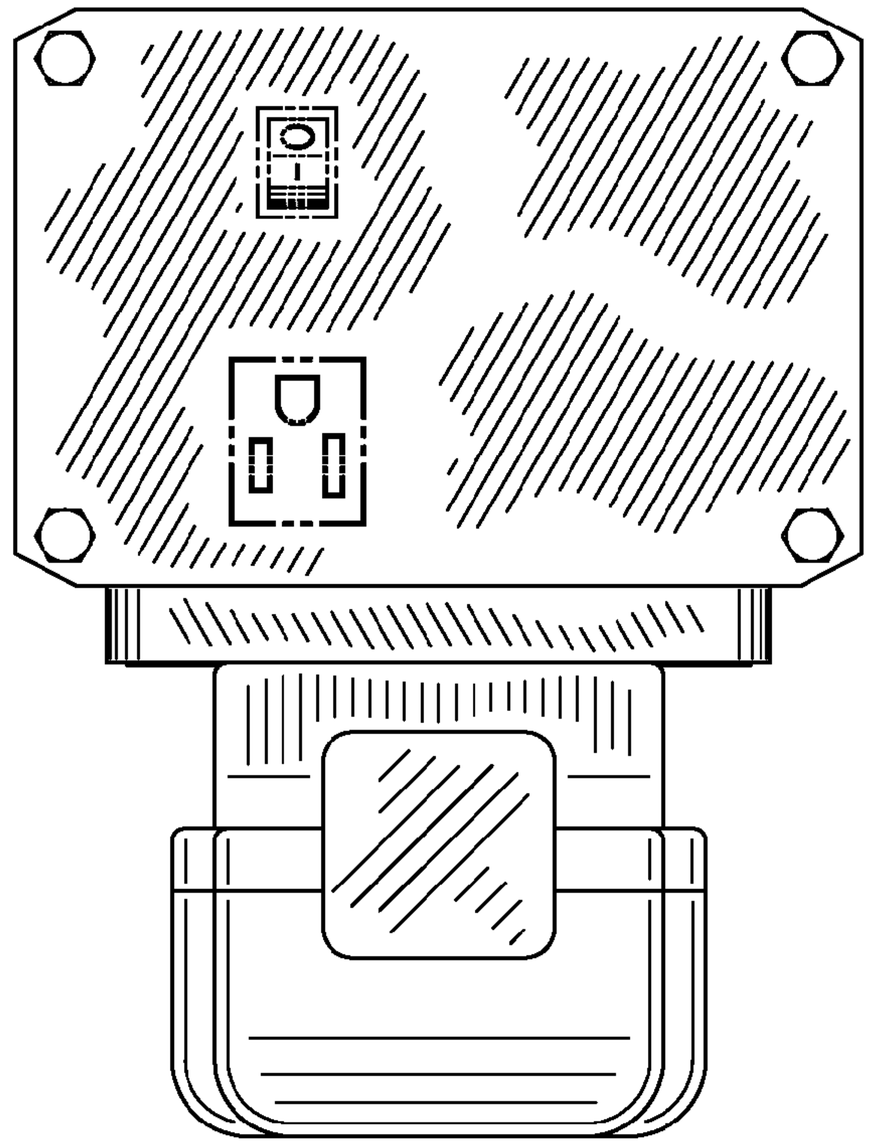

FIG. 13

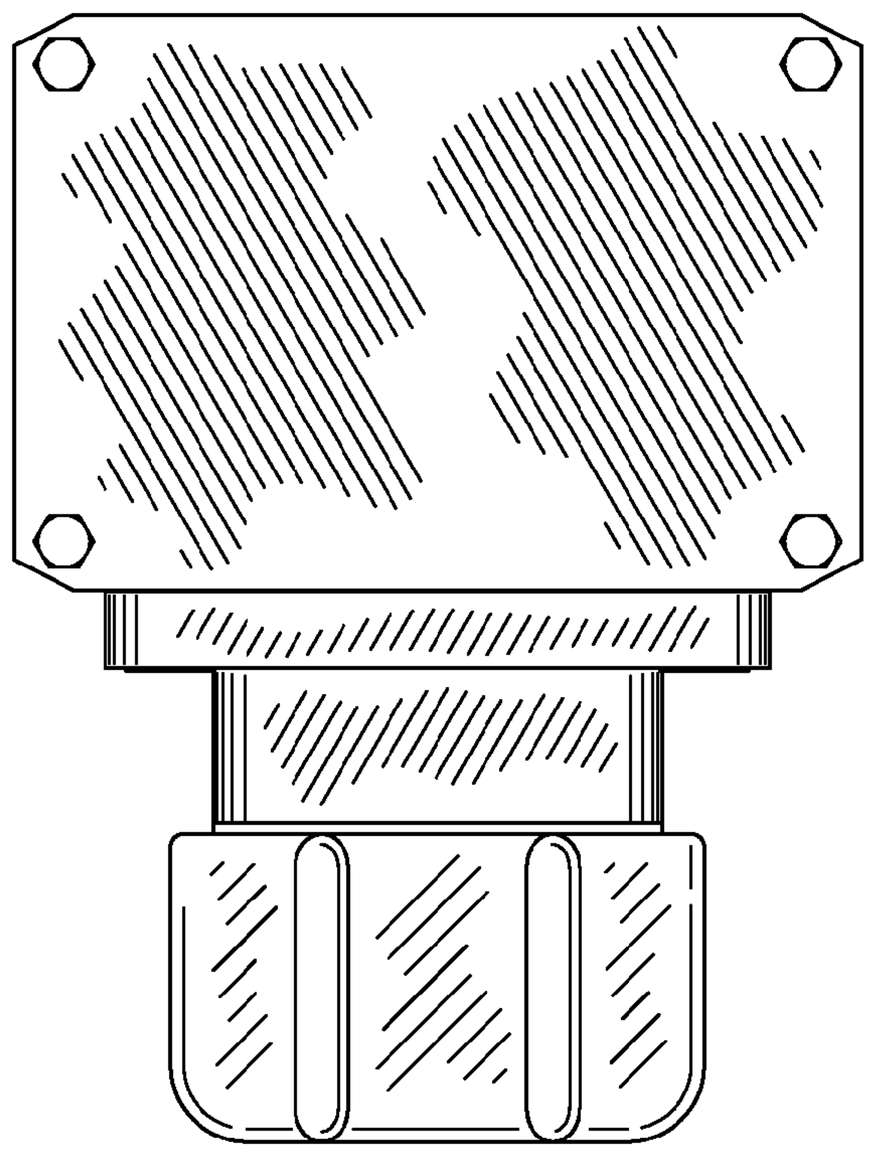

FIG. 14

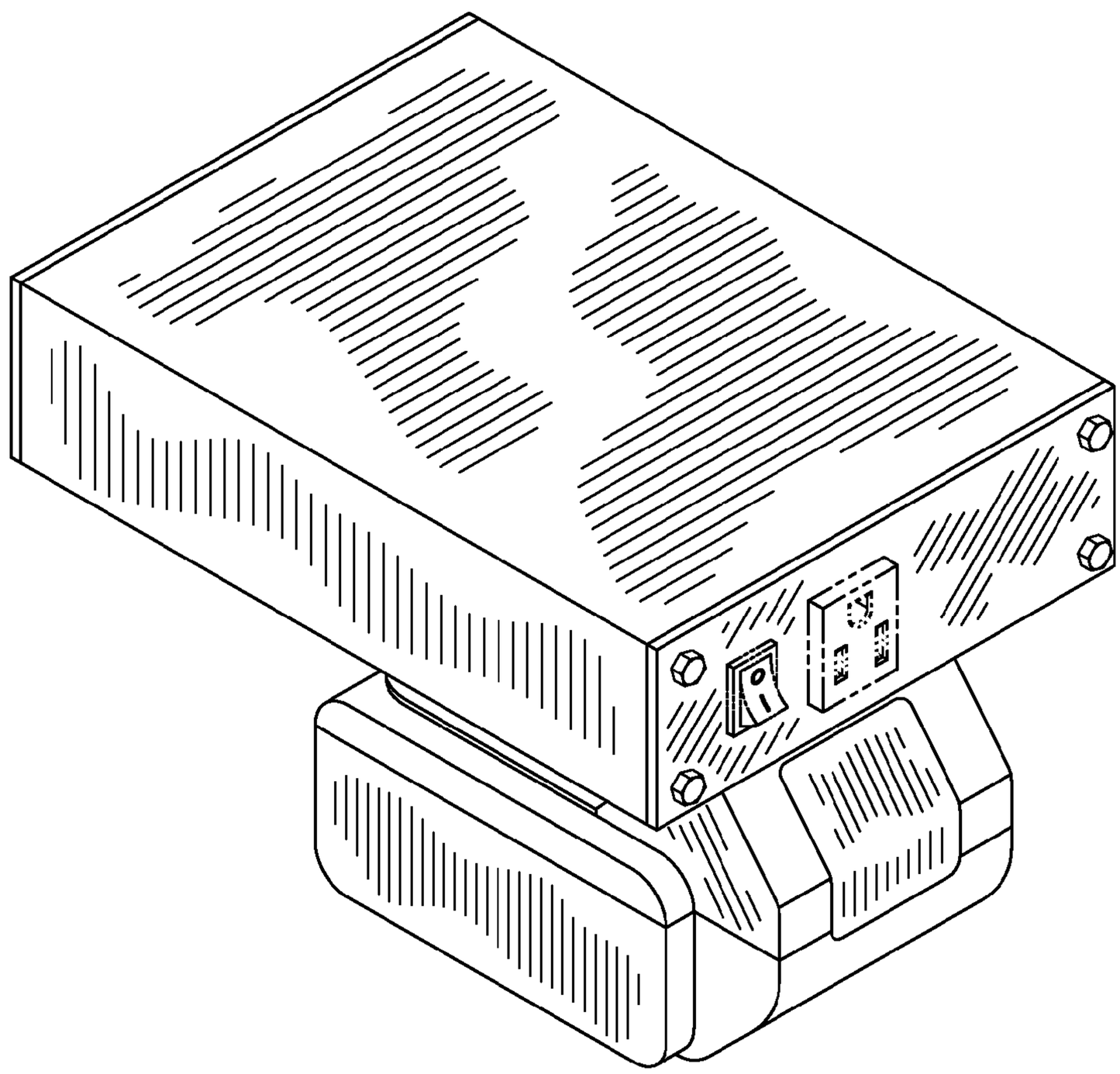

FIG. 15

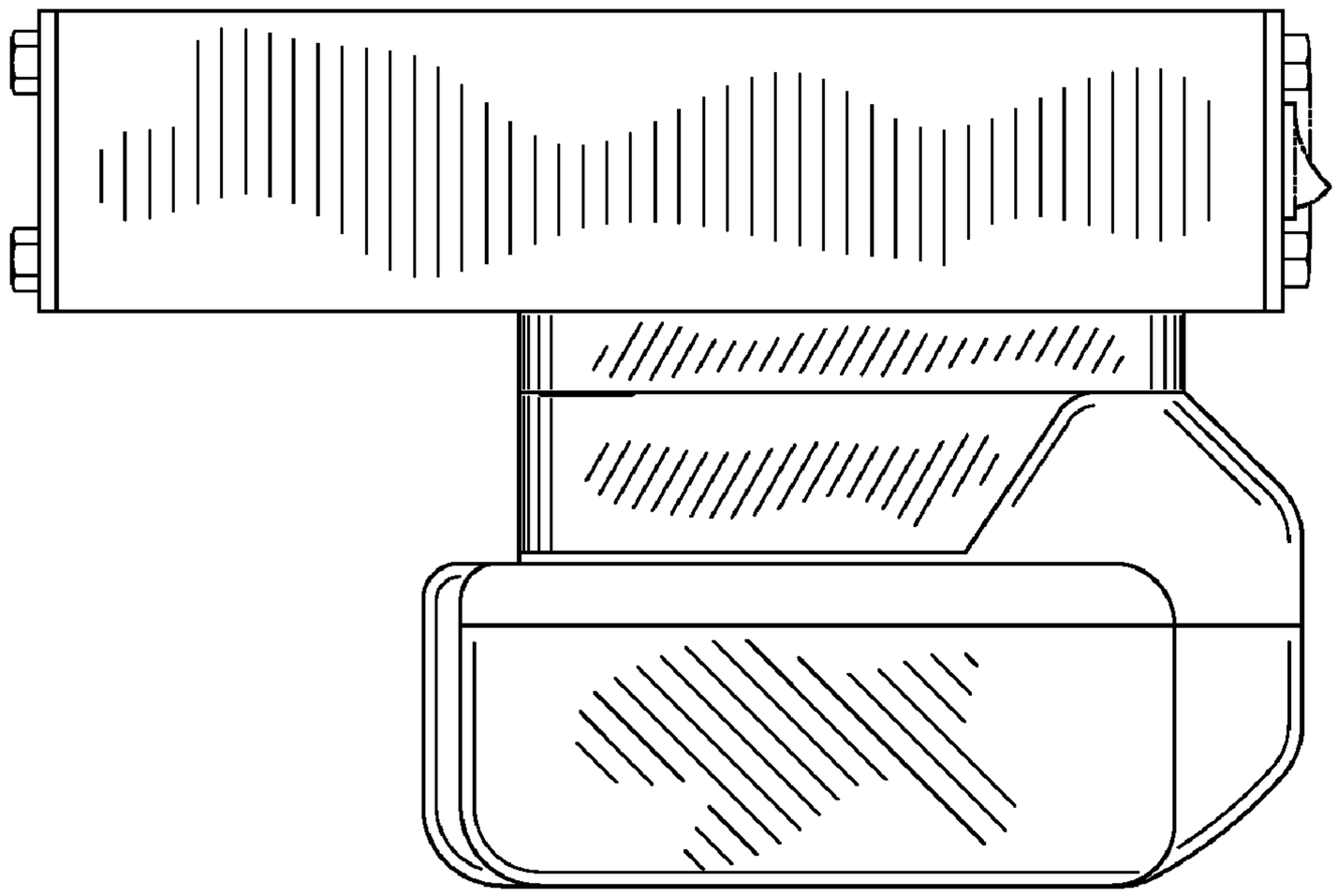

FIG. 16

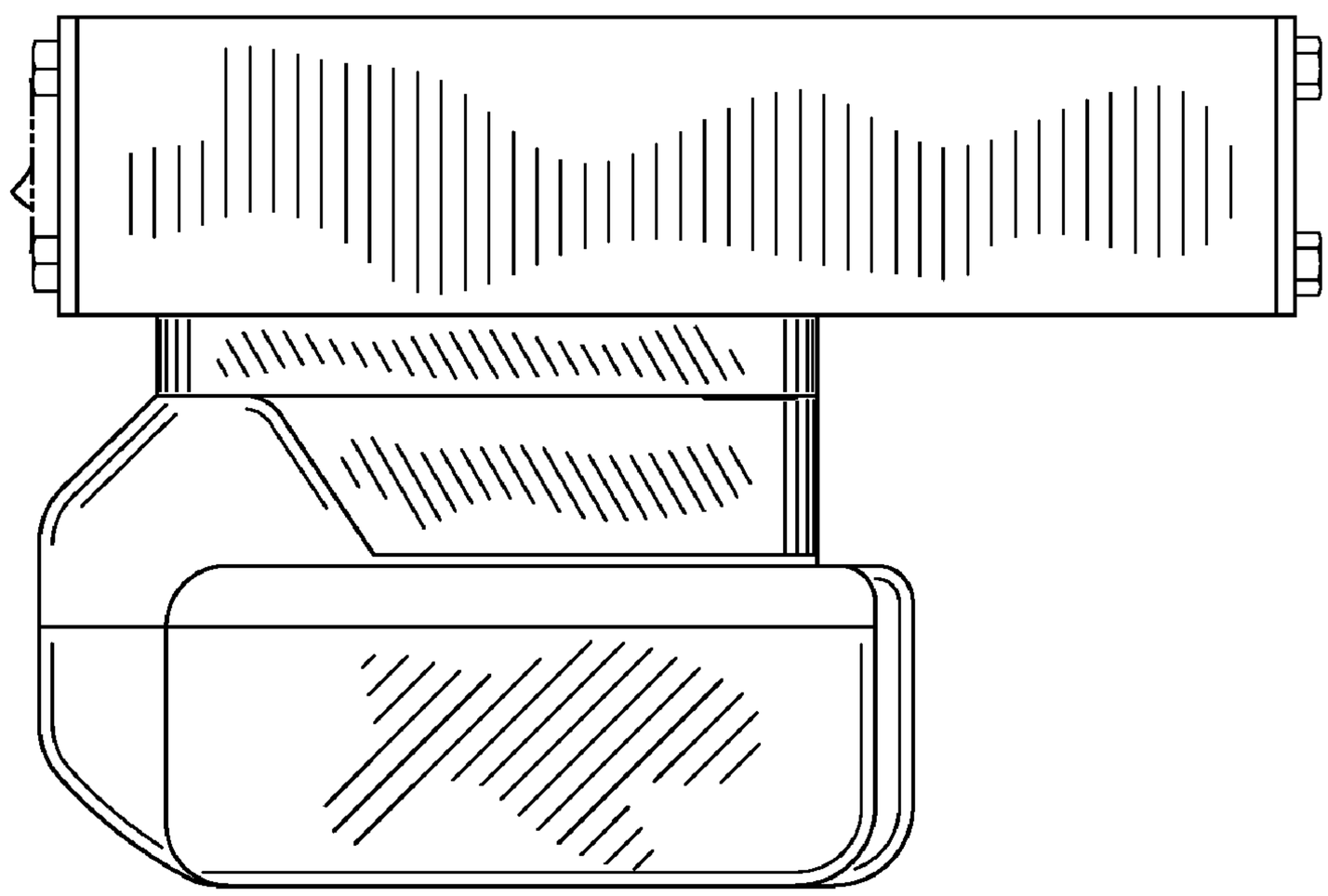

FIG. 17

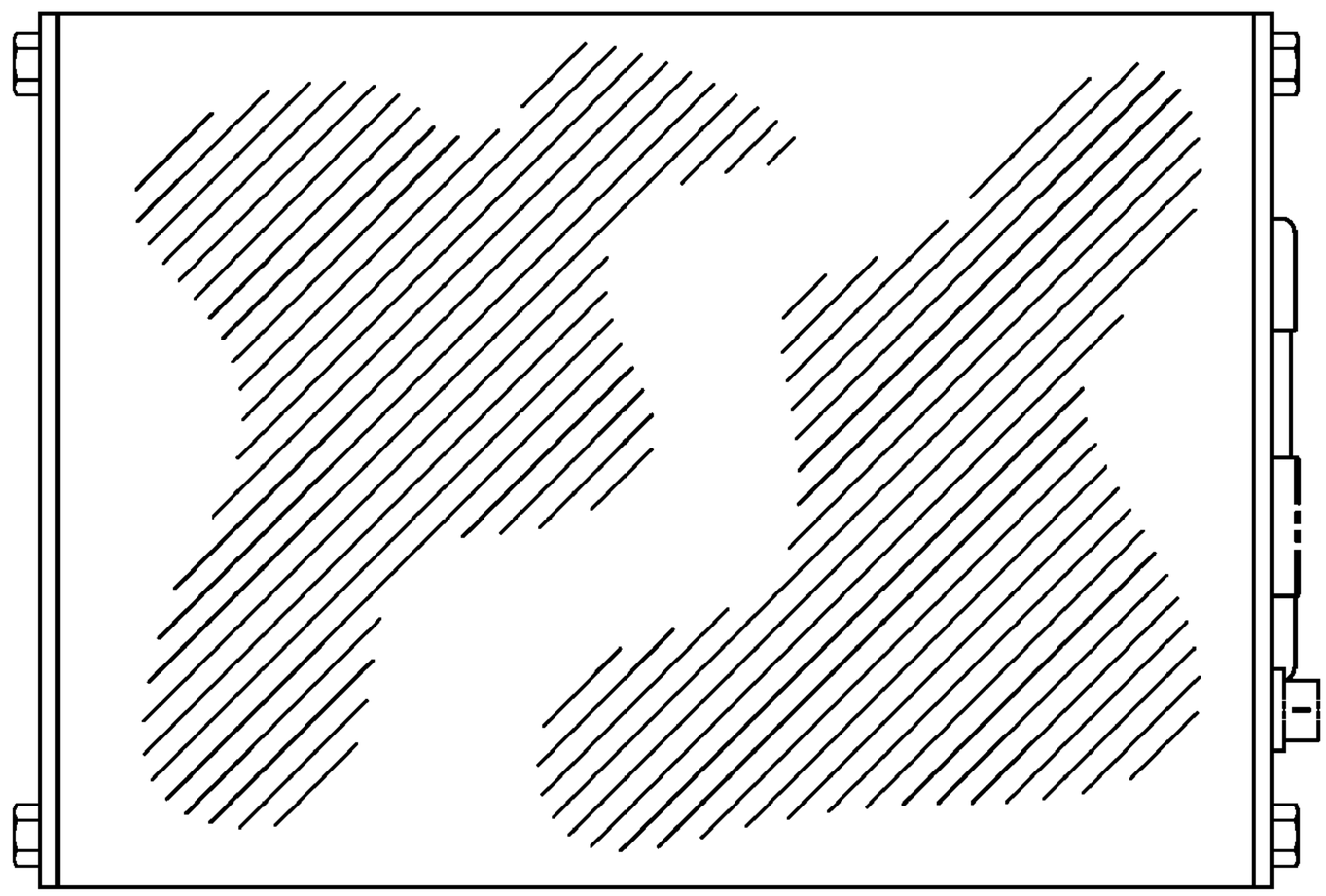

FIG. 18

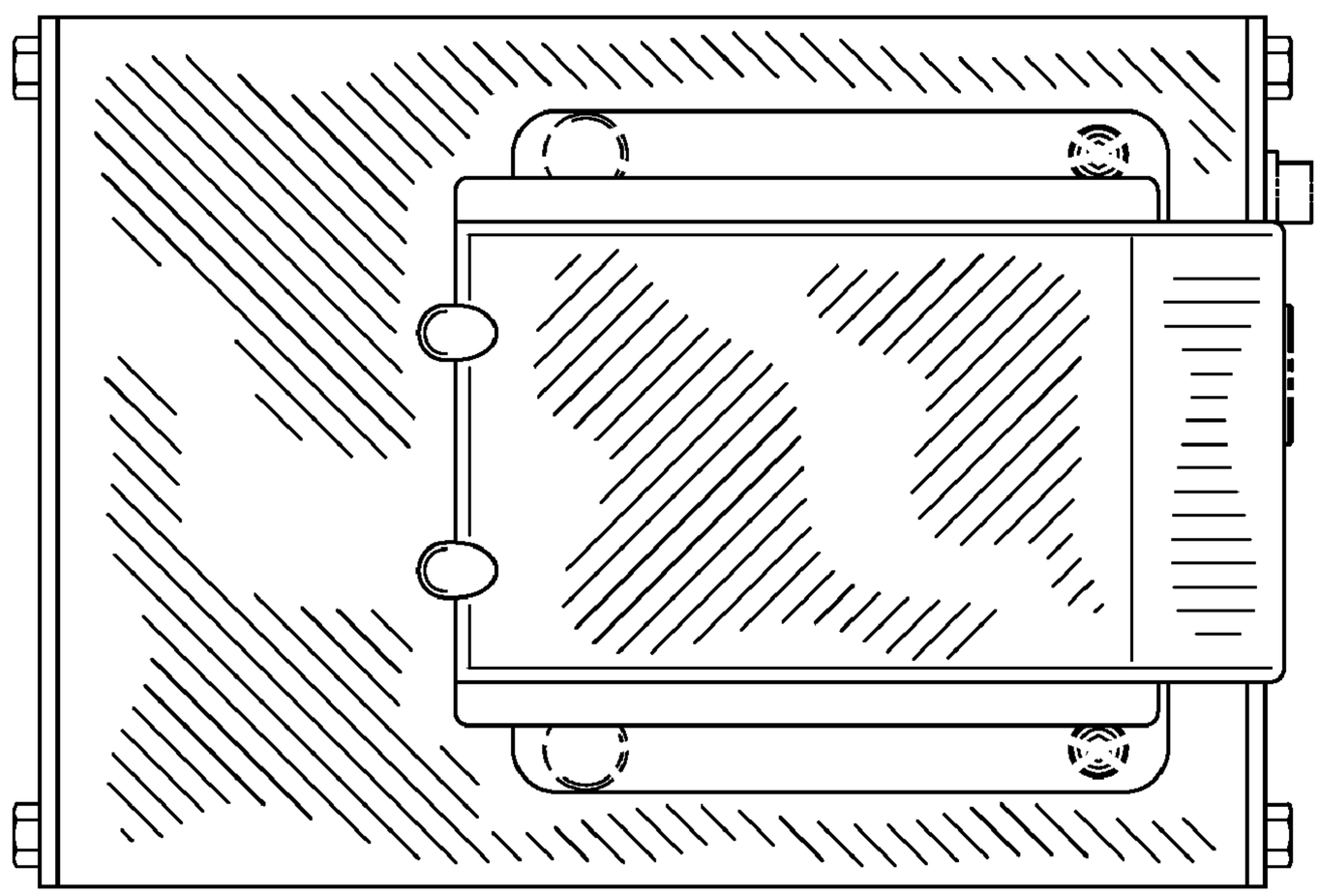

FIG. 19

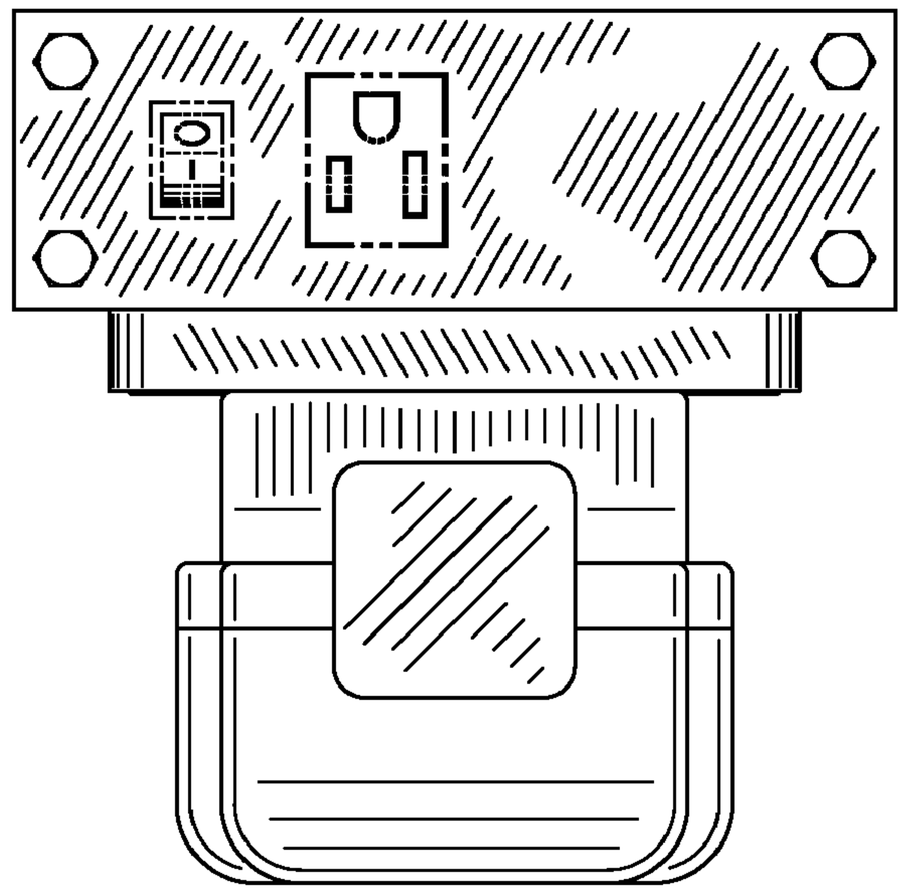

FIG. 20

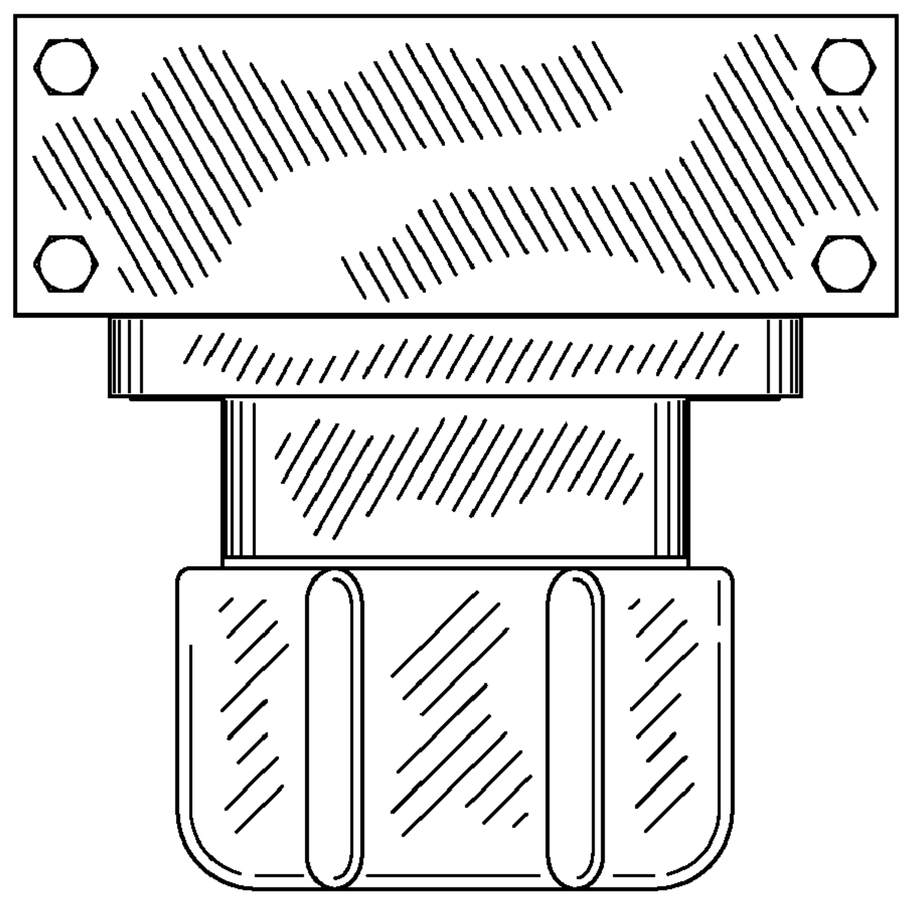

FIG. 21

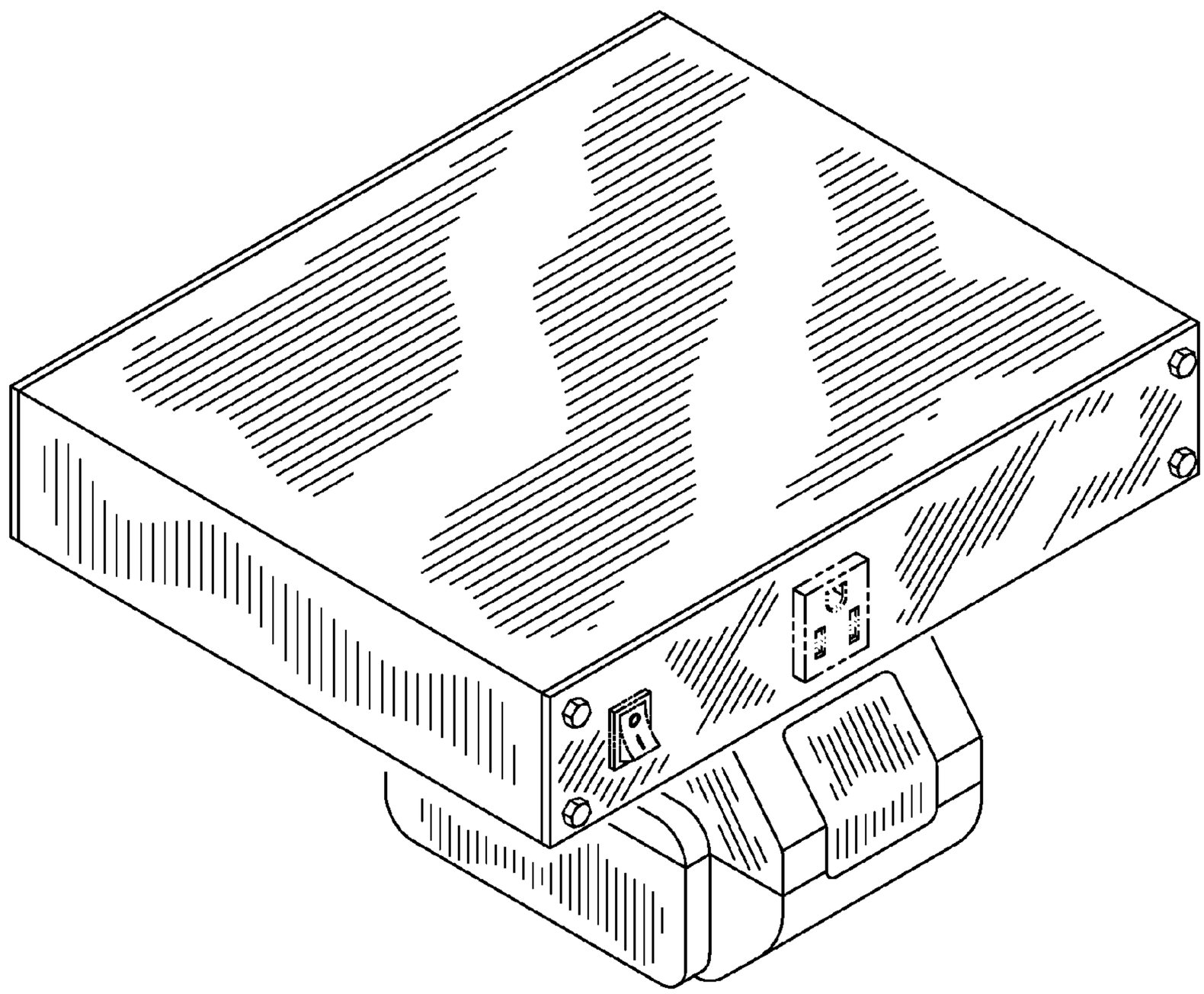

FIG. 22

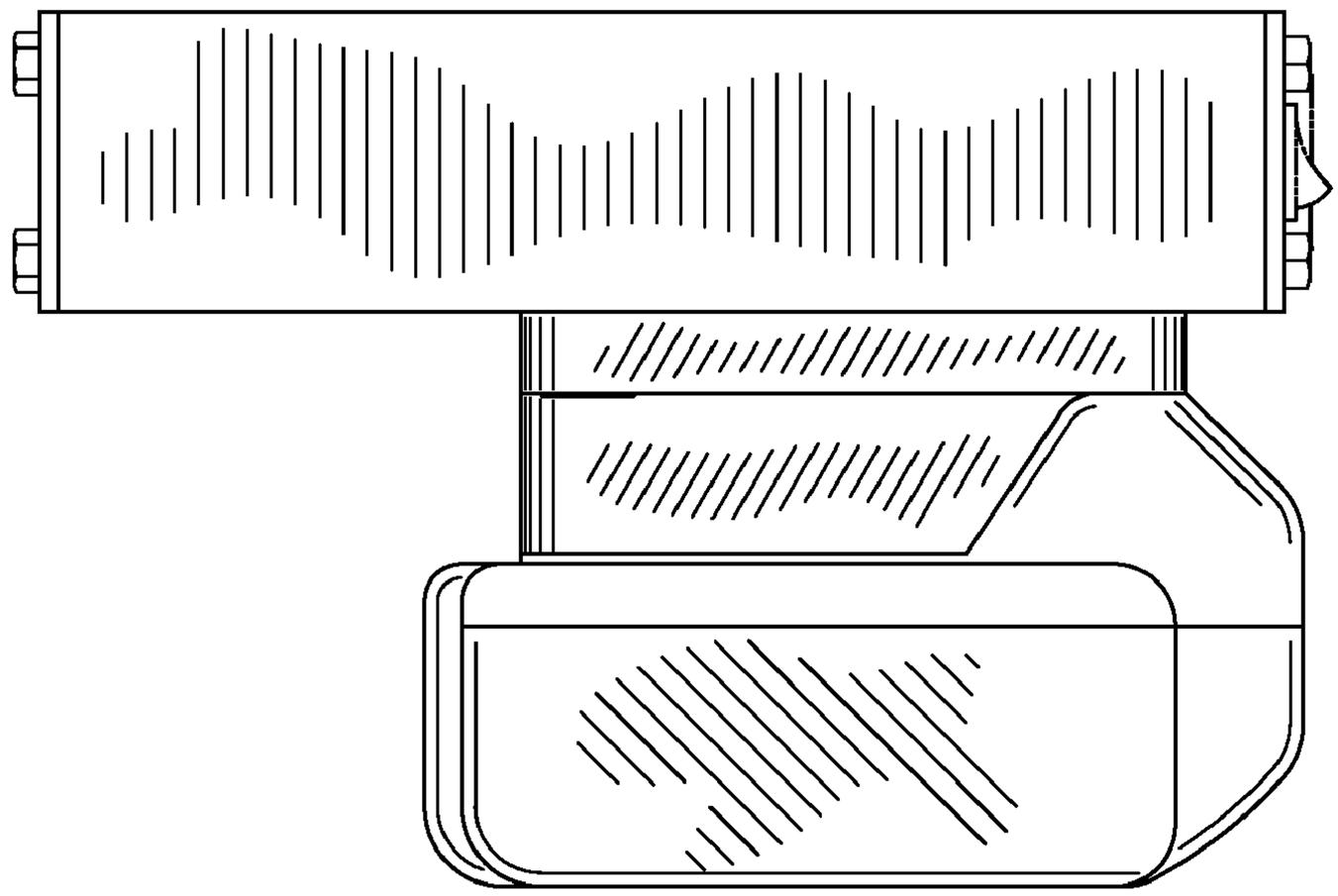

FIG. 23

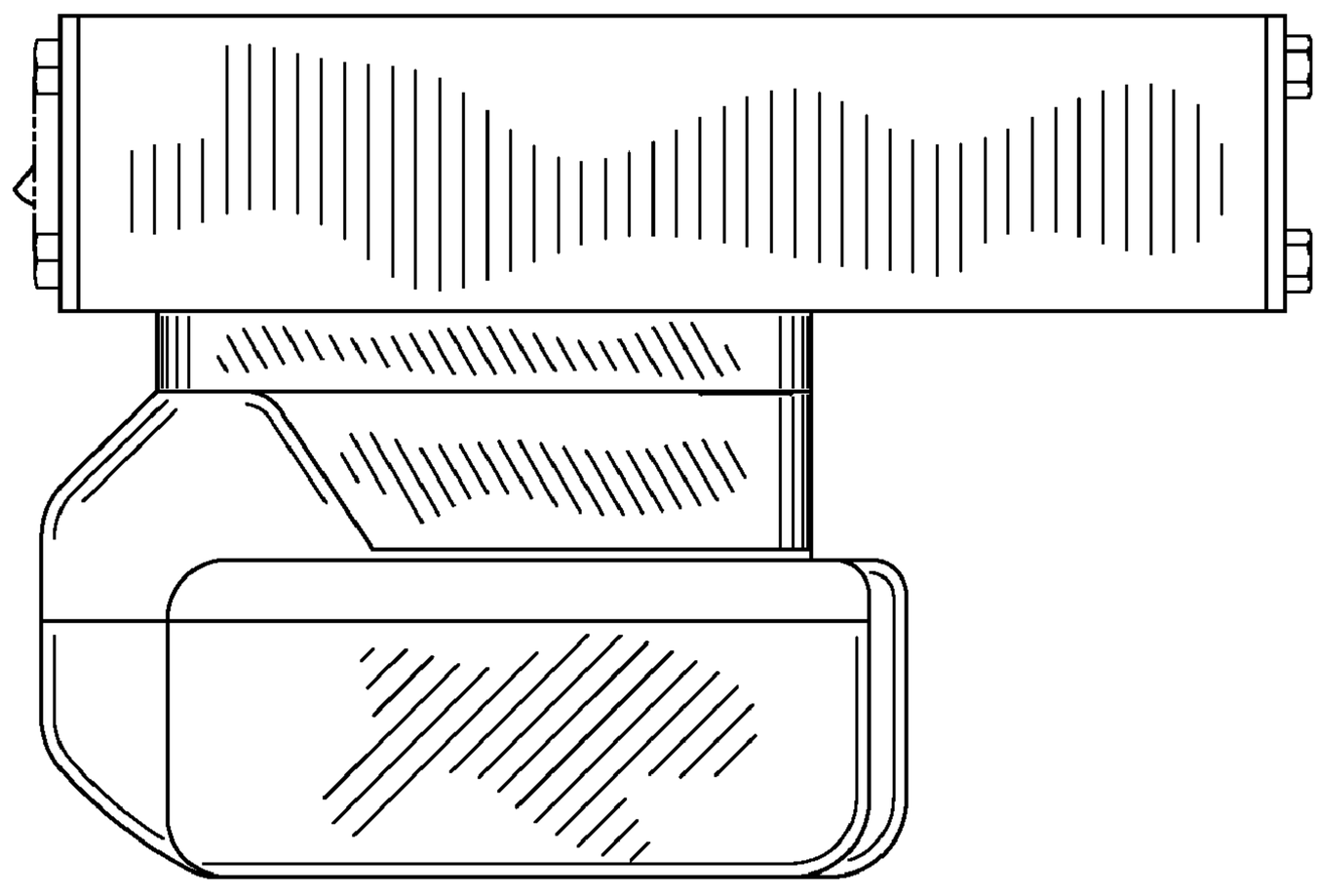

FIG. 24

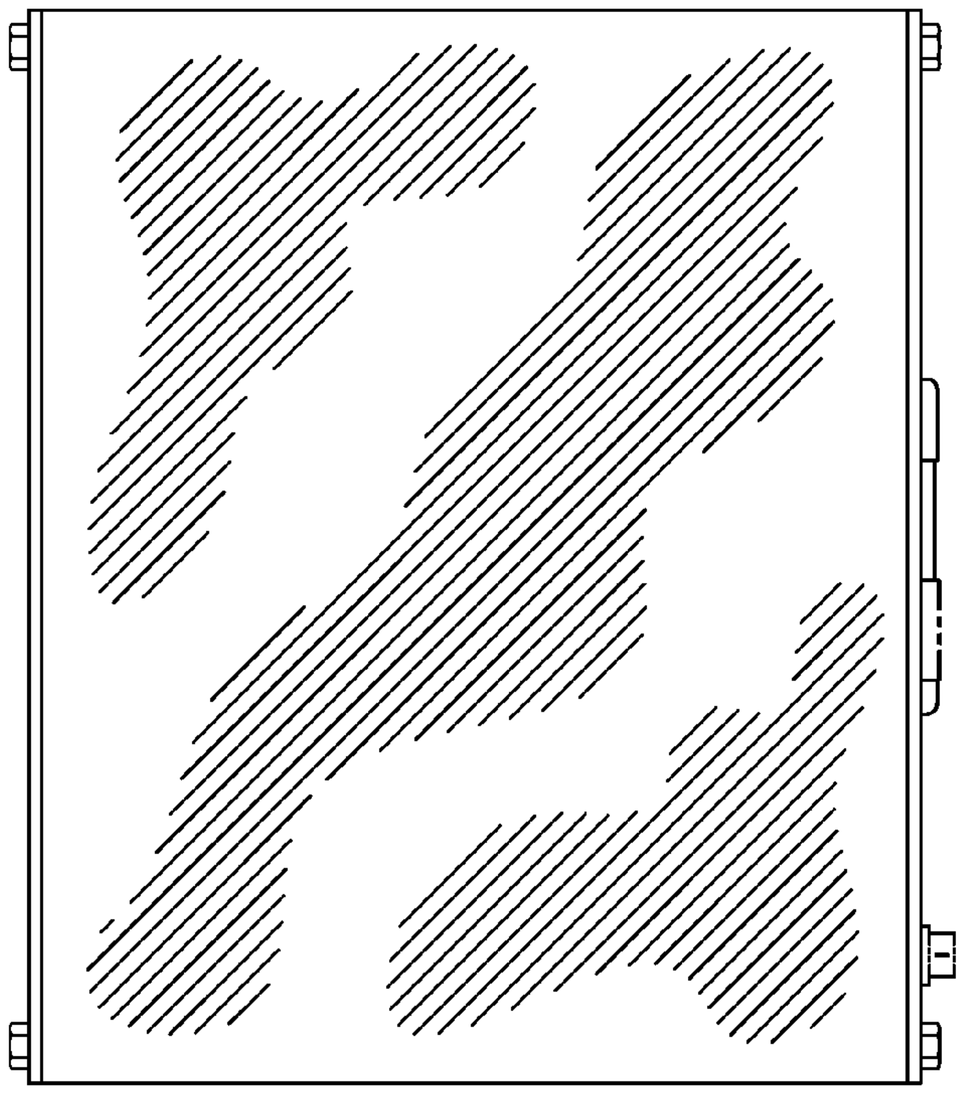

FIG. 25

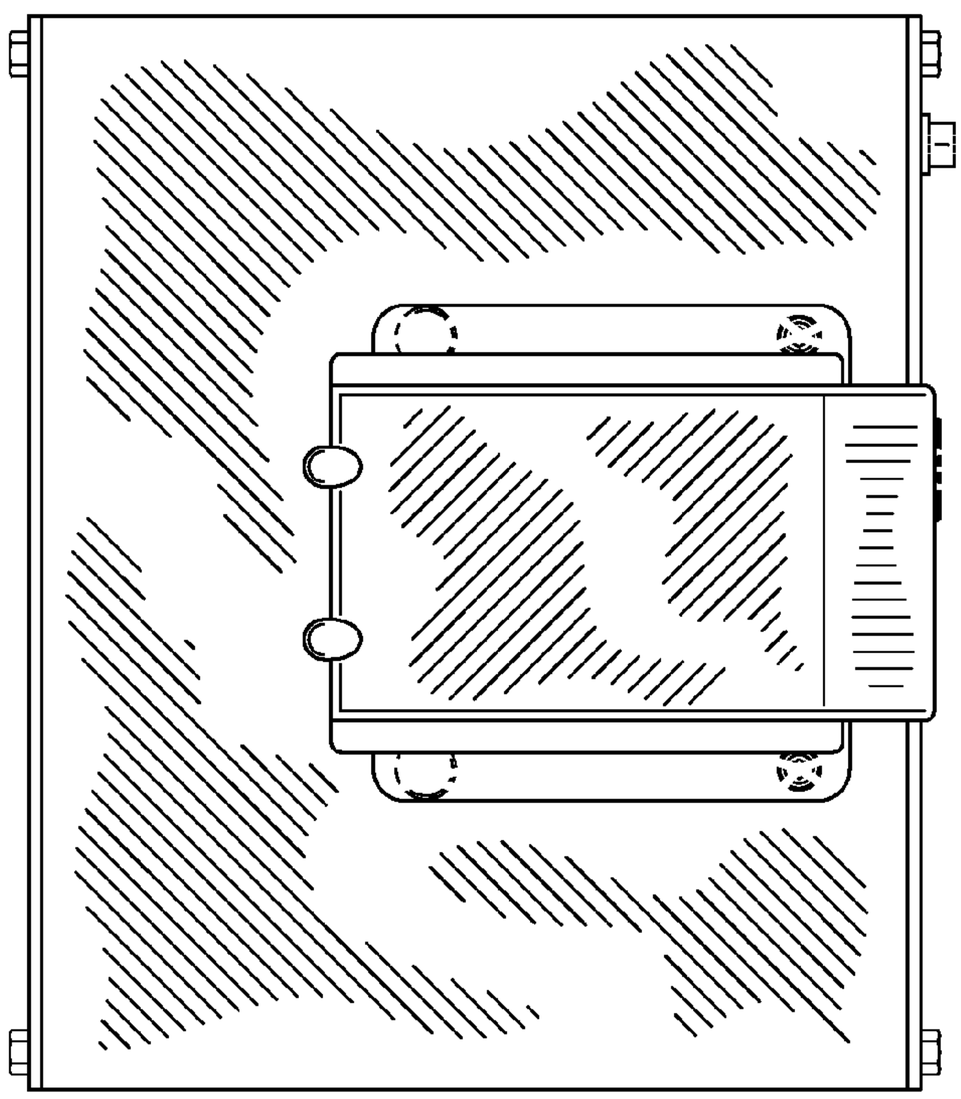

FIG. 26

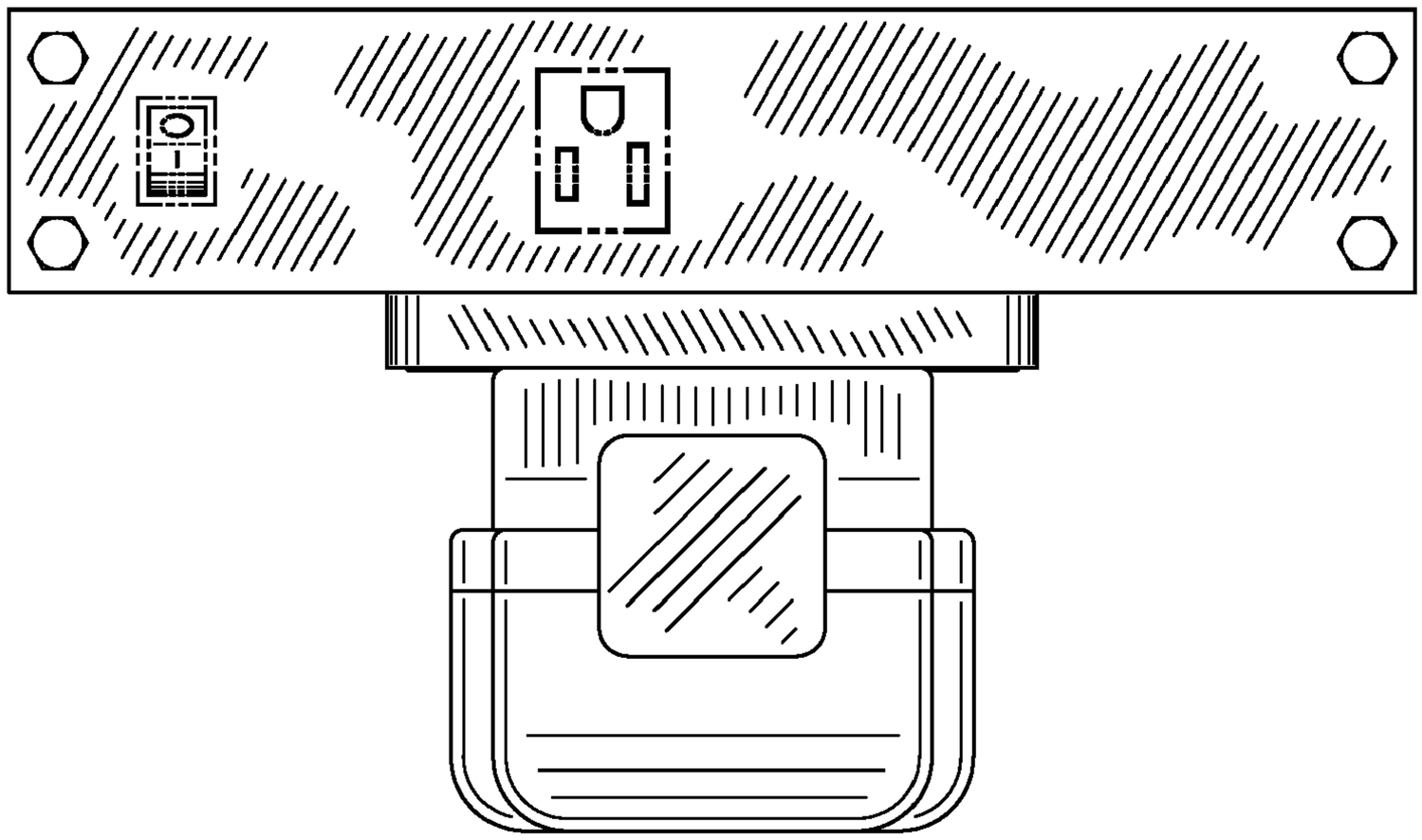

FIG. 27

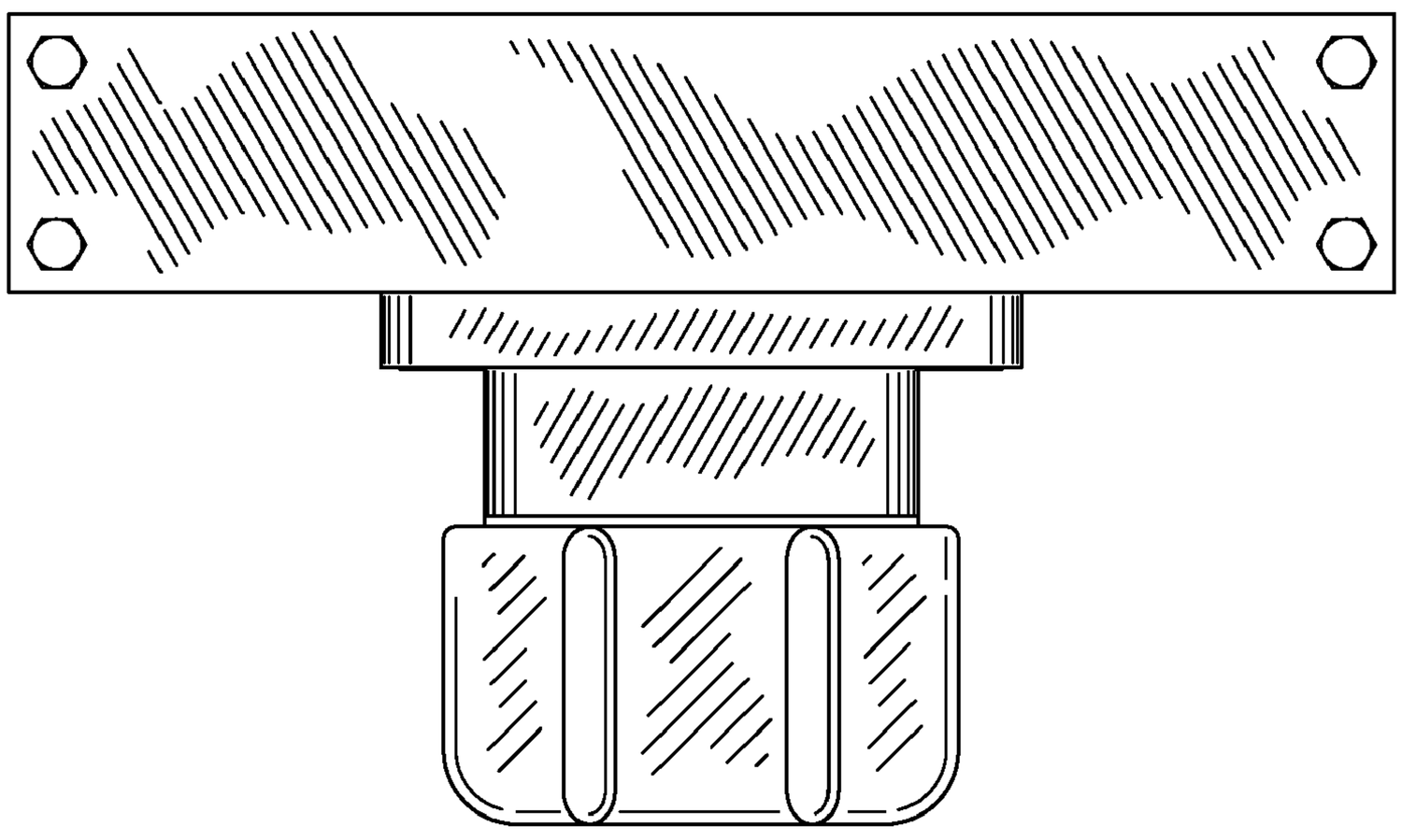

FIG. 28

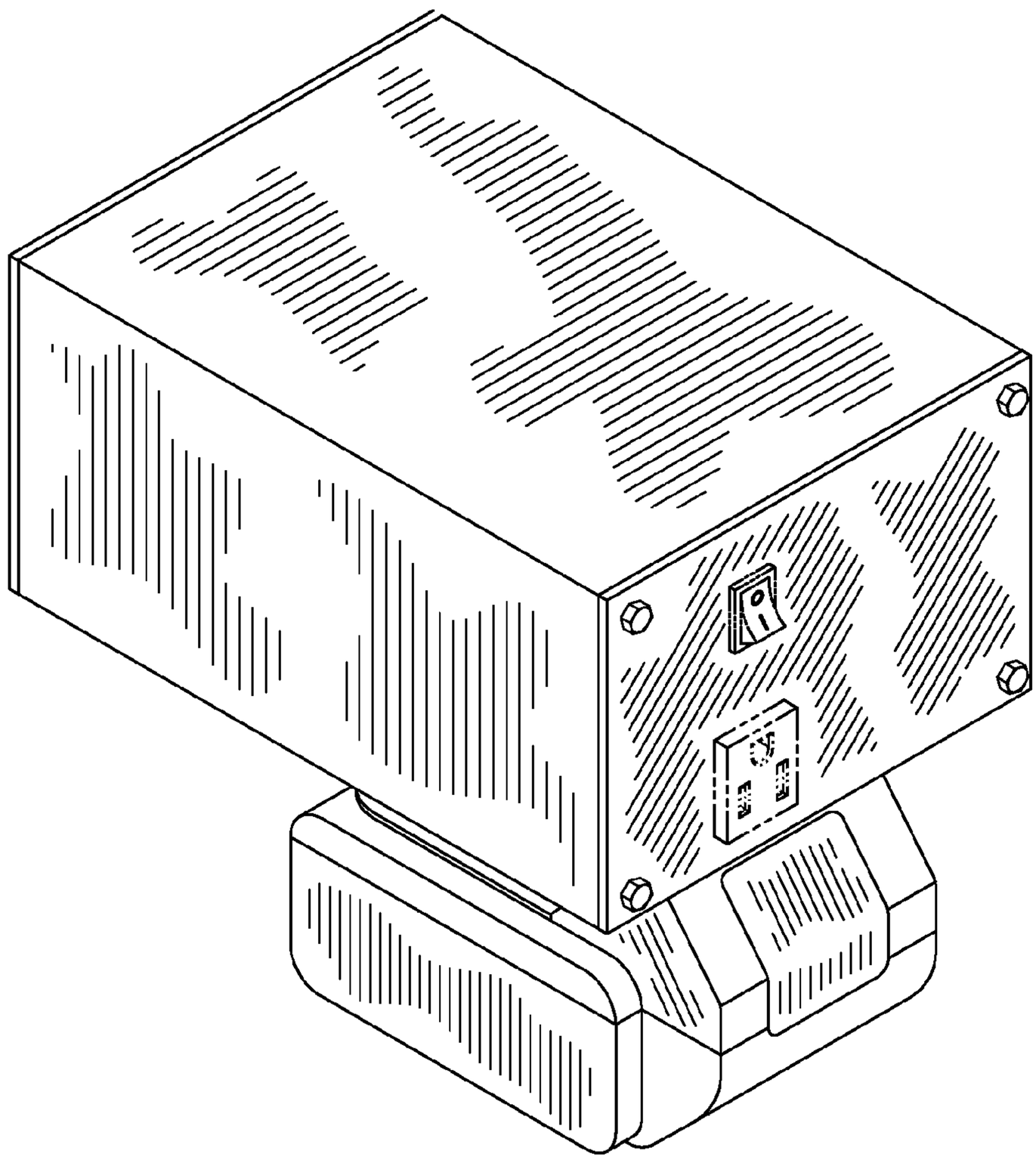

FIG. 29

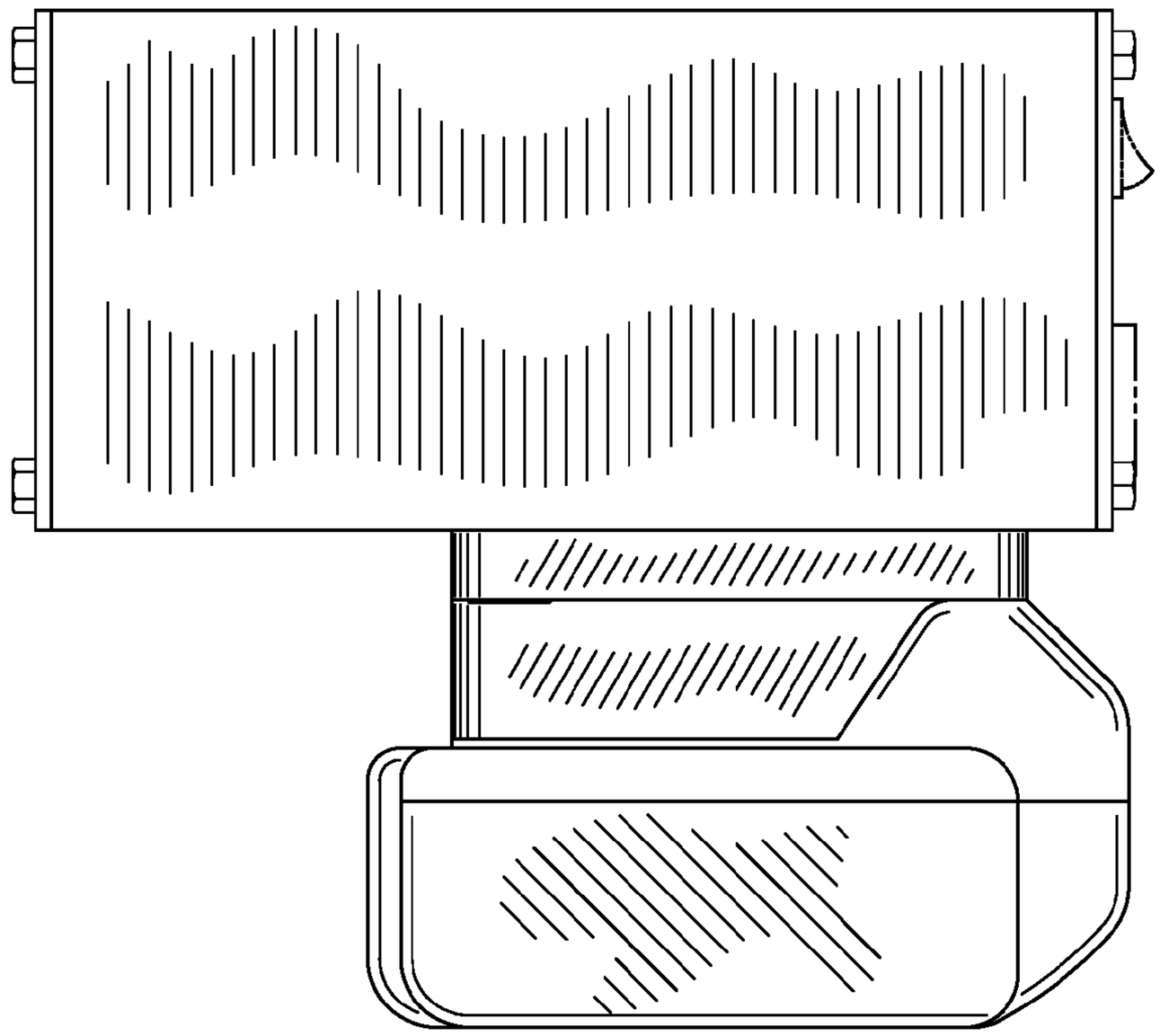

FIG. 30

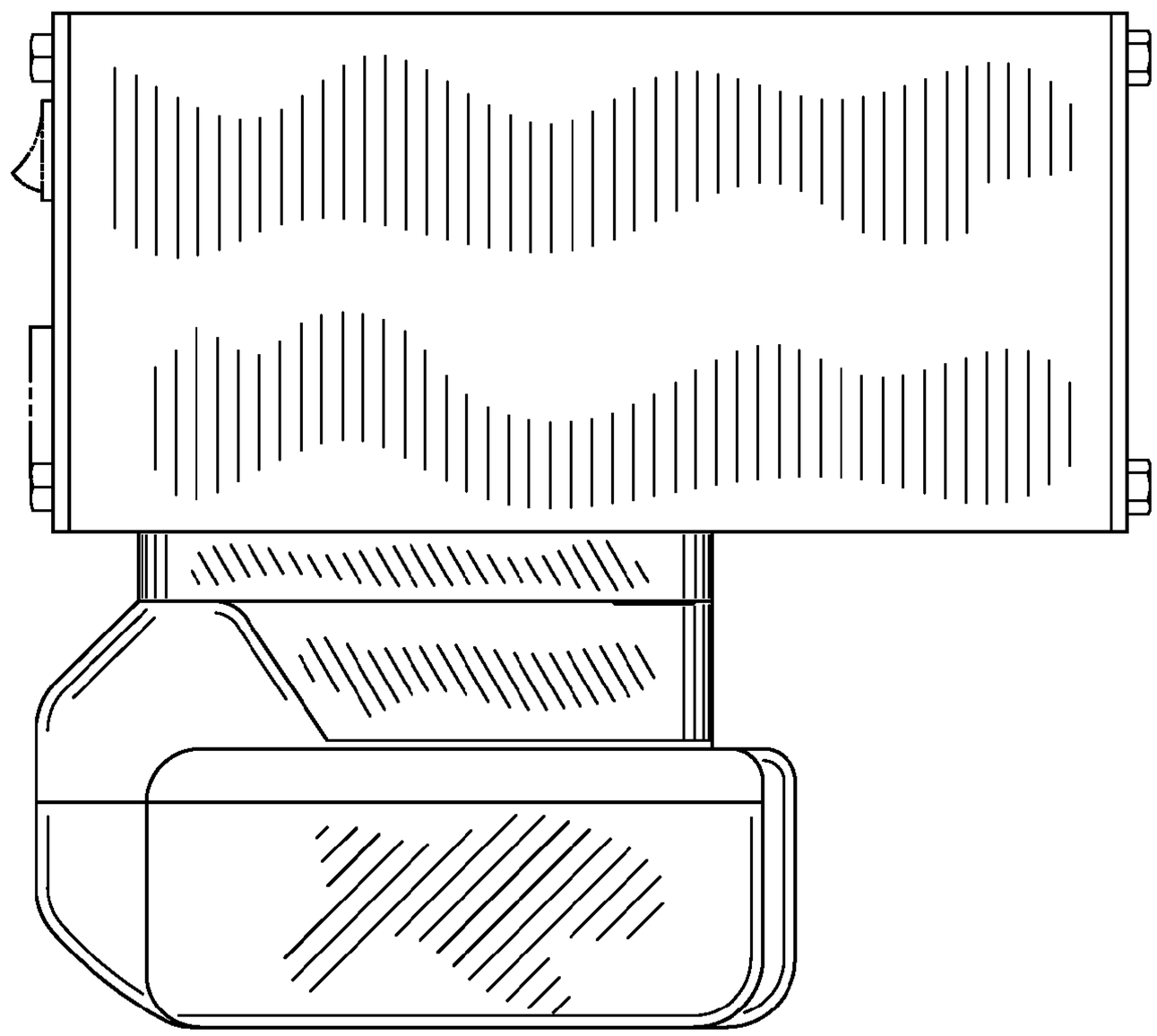

FIG. 31

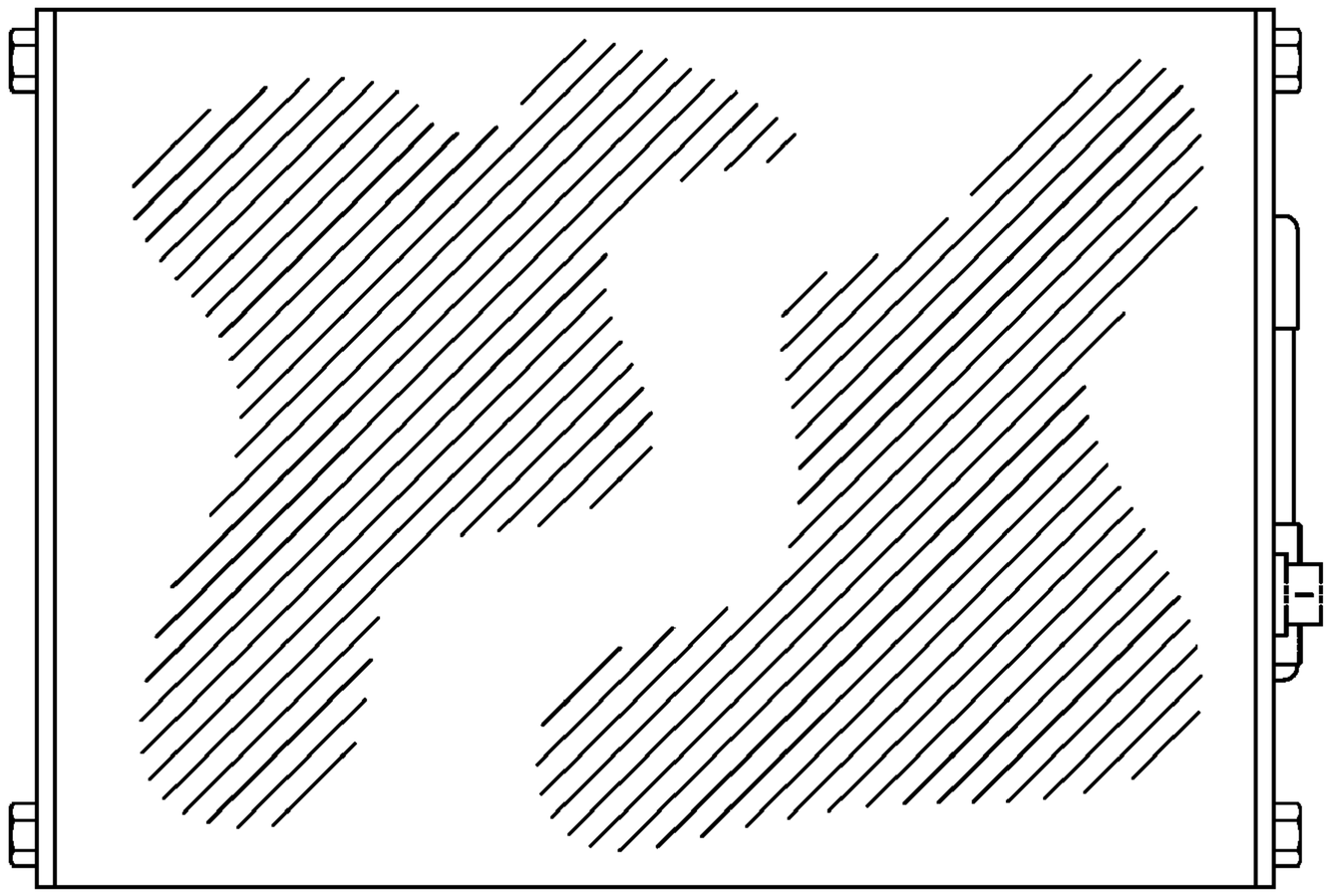

FIG. 32

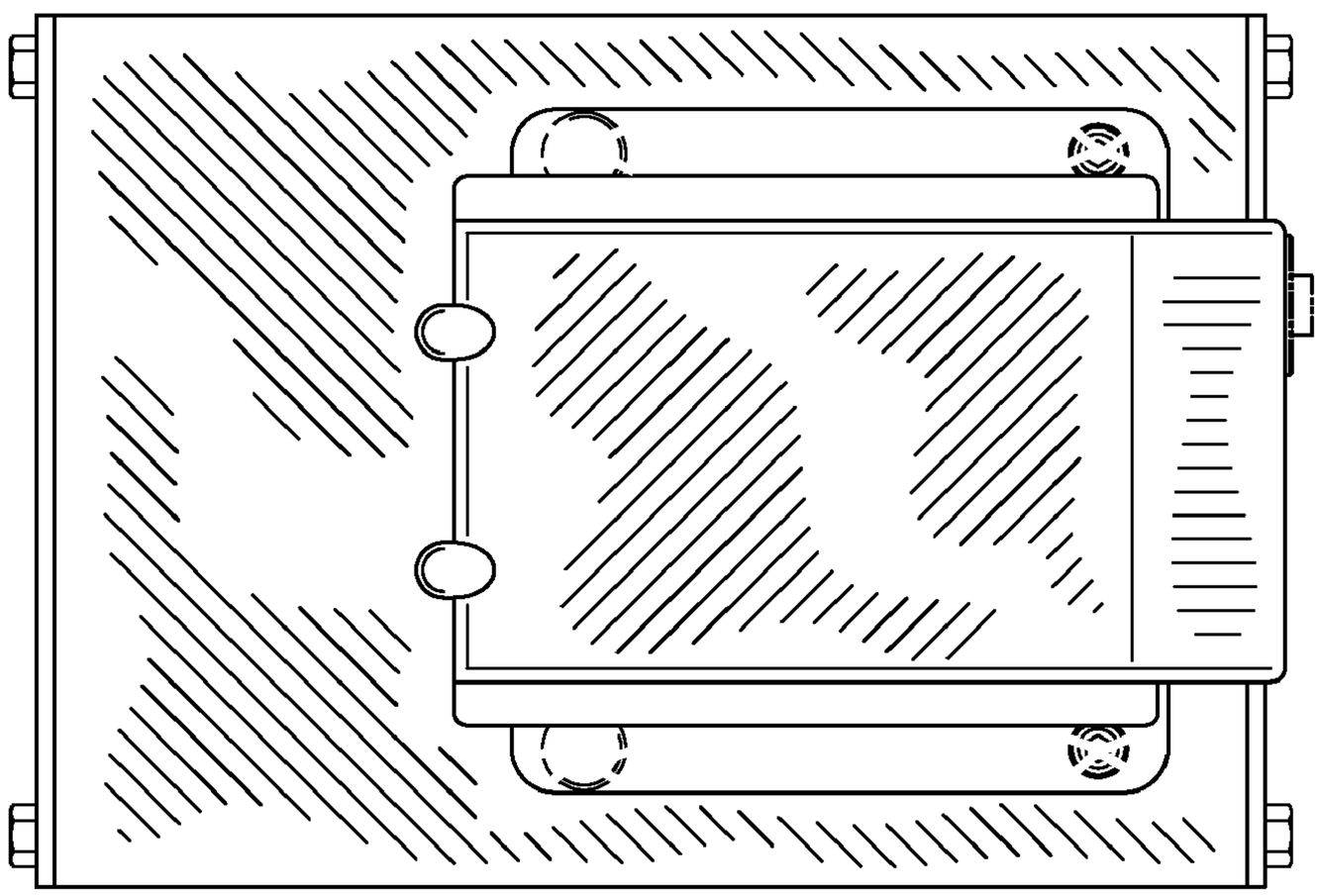

FIG. 33

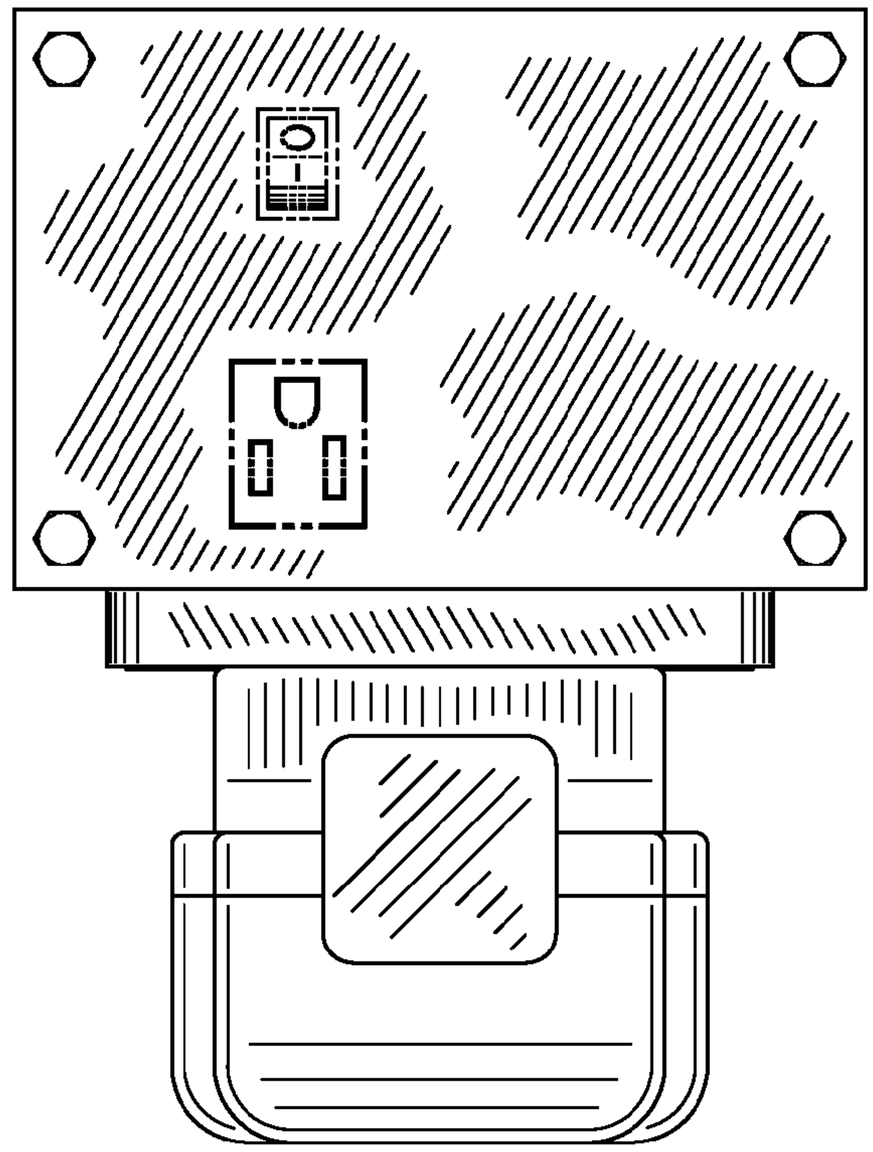

FIG. 34

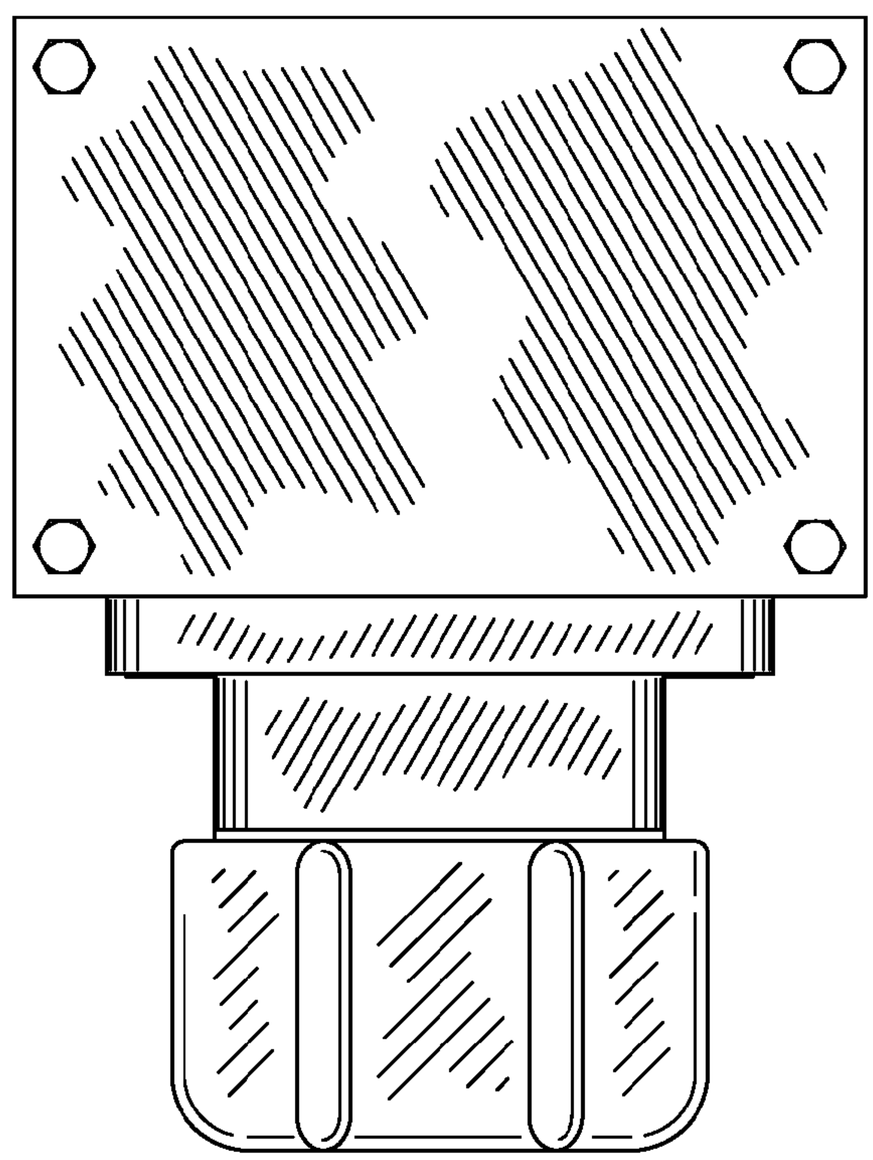

FIG. 35