US00D631663S

(12) United States Design Patent

Krus et al.

(10) Patent No.: US D631,663 S
(45) Date of Patent: ** Feb. 1, 2011

(54) **BRUSH**

(75) Inventors: **Matthew Krus**, Seattle, WA (US); **David Hull**, Seattle, WA (US); **Jonah S. Griffith**, Seattle, WA (US); **Adam A. Jossem**, Seattle, WA (US)

(73) Assignee: **Chef'n Corporation**, Seattle, WA (US)

(**) Term: **14 Years**

(21) Appl. No.: **29/323,136**

(22) Filed: **Aug. 19, 2008**

(51) **LOC (9) Cl.** **04-01**

(52) **U.S. Cl.** **D4/127**; D4/138

(58) **Field of Classification Search** D4/102, D4/114, 127, 132–134, 136, 138; D28/7, D28/63; 15/143.1, 159.1, 160, 186–188, 15/244.1; 601/136, 137, 138; D32/45, 52; 401/183–185, 268, 272, 273, 286, 291
See application file for complete search history.

(56) **References Cited**

U.S. PATENT DOCUMENTS

D119,028	S	*	2/1940	Partridge	D4/132
2,817,106	A	*	12/1957	Putz	401/183
D326,778	S	*	6/1992	Vetter	D4/114
D380,950	S	*	7/1997	Gildersleeve et al.	D8/62
D388,961	S	*	1/1998	Berti	D4/138
D438,013	S	*	2/2001	Hay	D4/114
D495,494	S	*	9/2004	Berti	D4/127
D512,567	S	*	12/2005	Eckhardt	D4/102
D565,846	S		4/2008	Holcomb et al.	D4/114
D574,152	S		8/2008	Holcomb et al.	D4/114

OTHER PUBLICATIONS

JP D1215867 Registered Industrial Design (Katsukawa Takashi Kei), Aug. 30, 2004, [online], [retrieved on Sep. 16, 2010]. Retrieved from the Japanese Database of the Questel Intellectual Property Portal using the Internet: <URL: http://www.orbit.com>.*

Kitchen Scrubber—Model # PKS200B, Black and Decker [online], © 2005, [retrieved on Sep. 17, 2010]. Retrieved for the Internet using Web Archive: <URL: http://web.archive.org/*/http://www.blackand-decker.com>.*

* cited by examiner

Primary Examiner—Melanie H Tung
Assistant Examiner—Lavone D Tabor
(74) *Attorney, Agent, or Firm*—Seed IP Law Group PLLC

(57) **CLAIM**

The ornamental design for a brush, as shown and described.

DESCRIPTION

FIG. **1** is an isometric view of a brush showing our new design.

FIG. **2** is a front elevation view thereof.

FIG. **3** is a rear elevation view thereof.

FIG. **4** is a left side elevation view thereof.

FIG. **5** is a right side elevation view thereof.

FIG. **6** is a top plan view thereof.

FIG. **7** is a bottom plan view thereof; and,

FIG. **8** is an isometric view of the brush shown in an alternate environment.

The broken lines adjacent the shaded areas on the handle as well as the outermost continuous broken line on the bottom of the head represent unclaimed boundaries. The broken lines showing bristles or a pad and the central area on the bottom of the head illustrate environment of the brush that along with the unclaimed boundaries form no part of the claimed design.

1 Claim, 7 Drawing Sheets

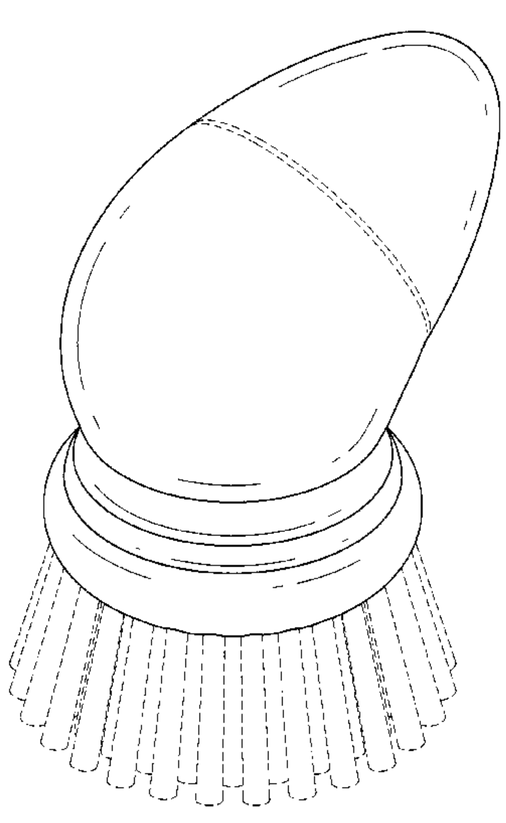

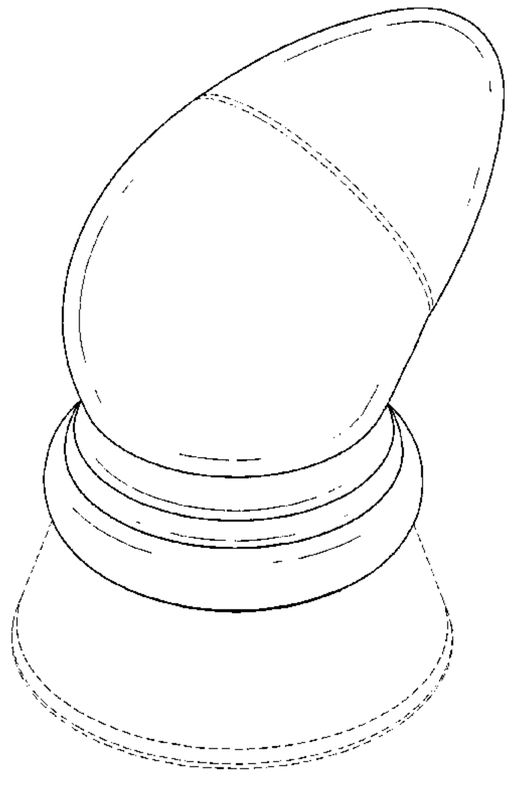

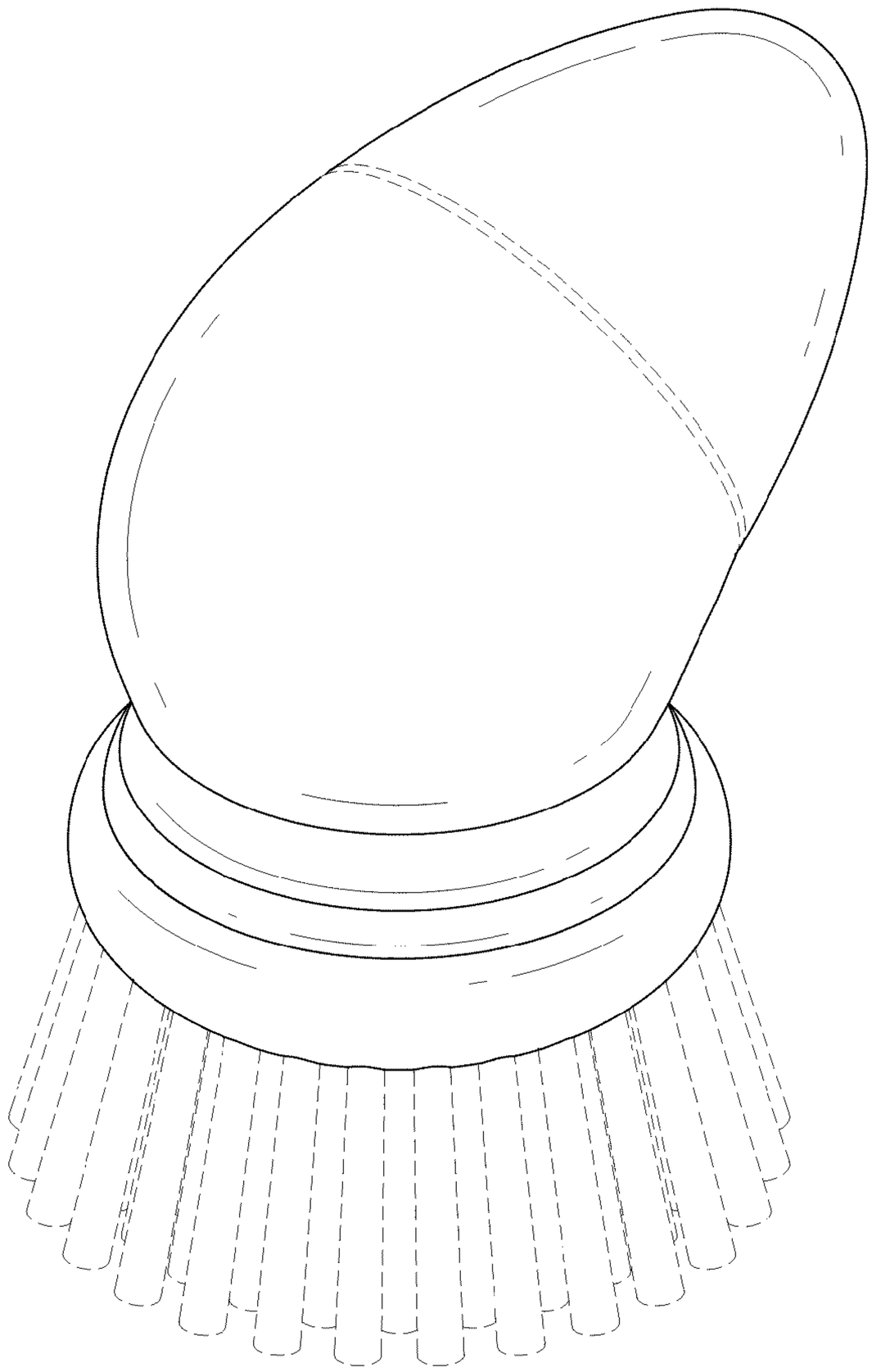

FIG. 1

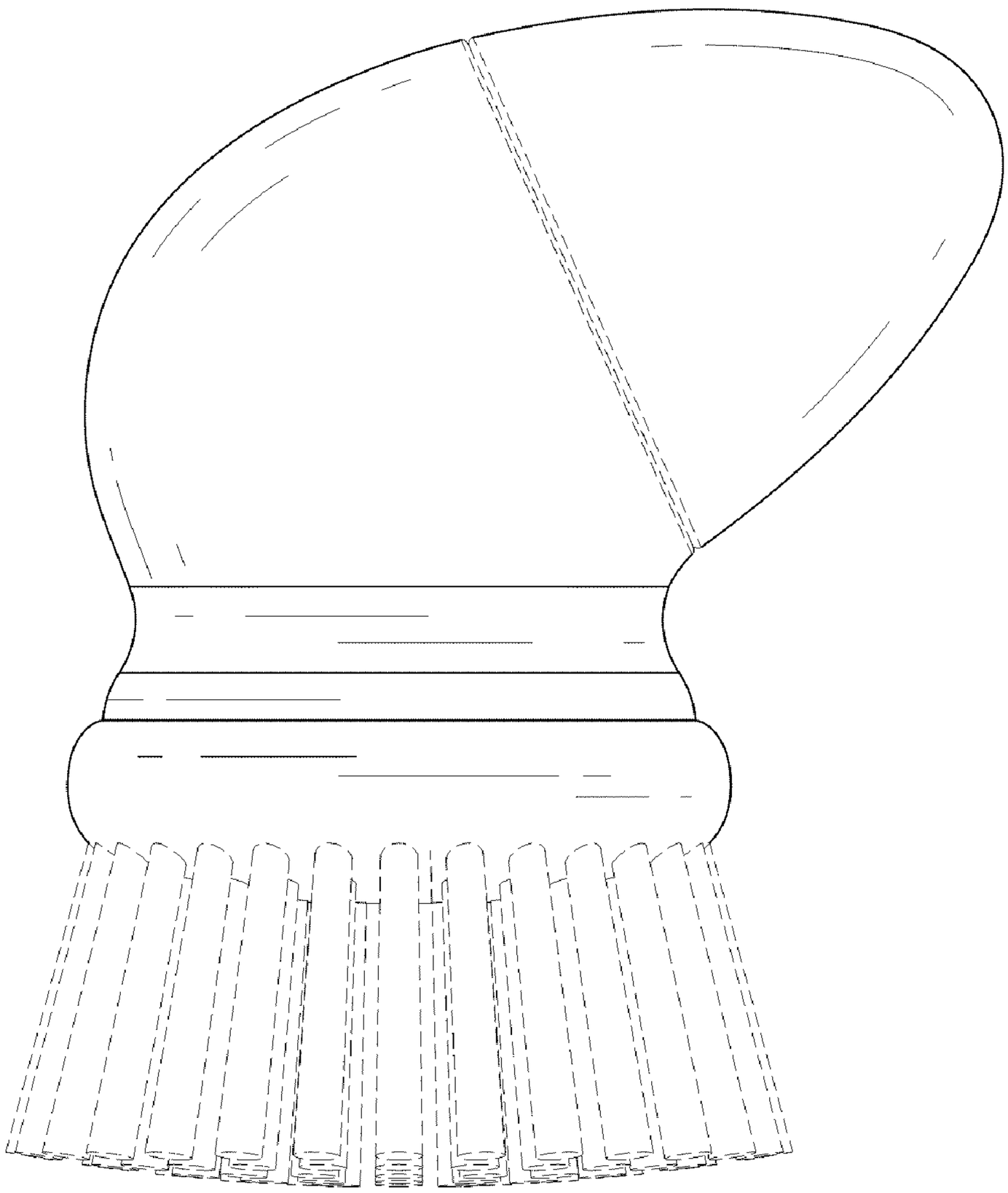

FIG. 2

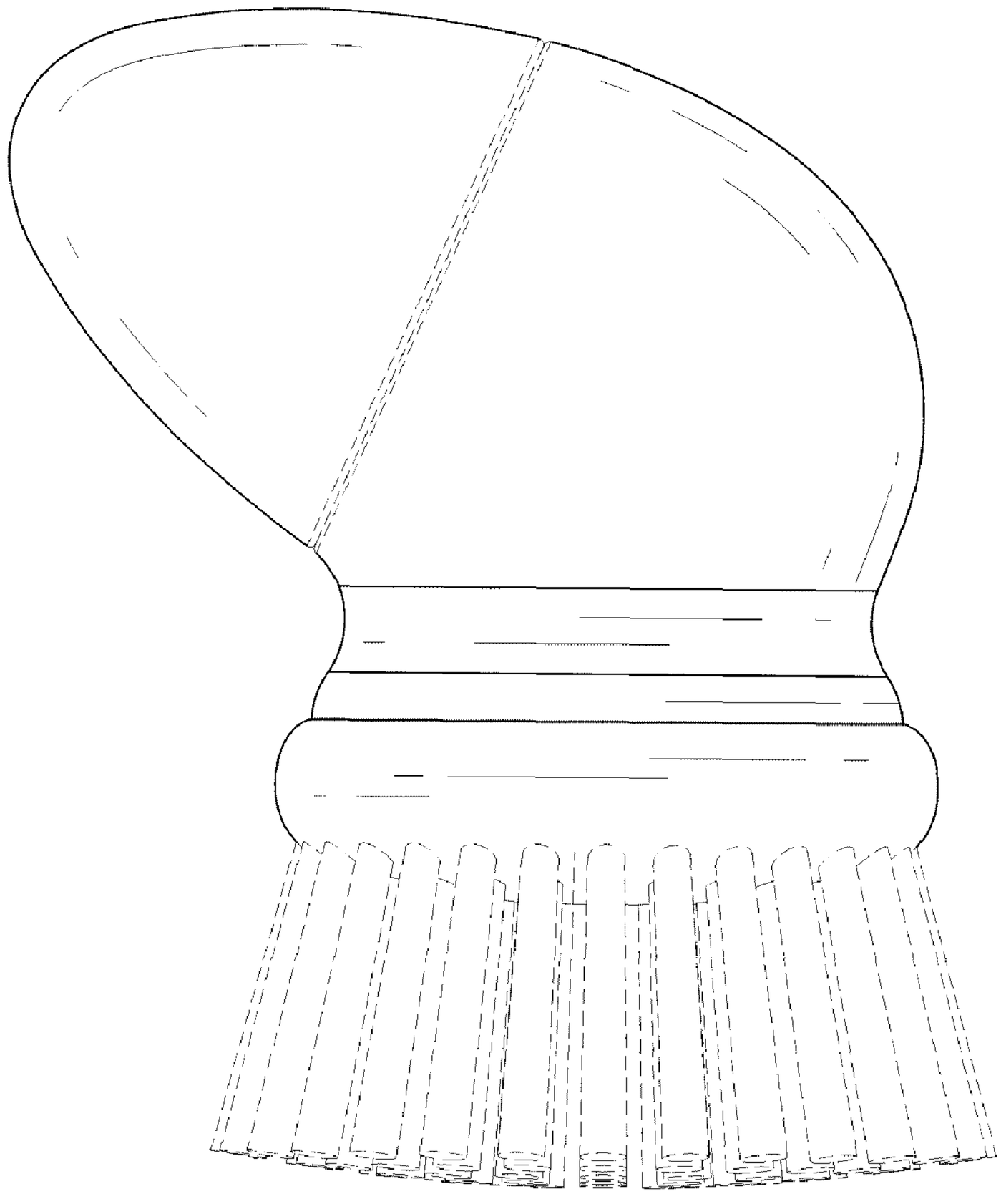

FIG. 3

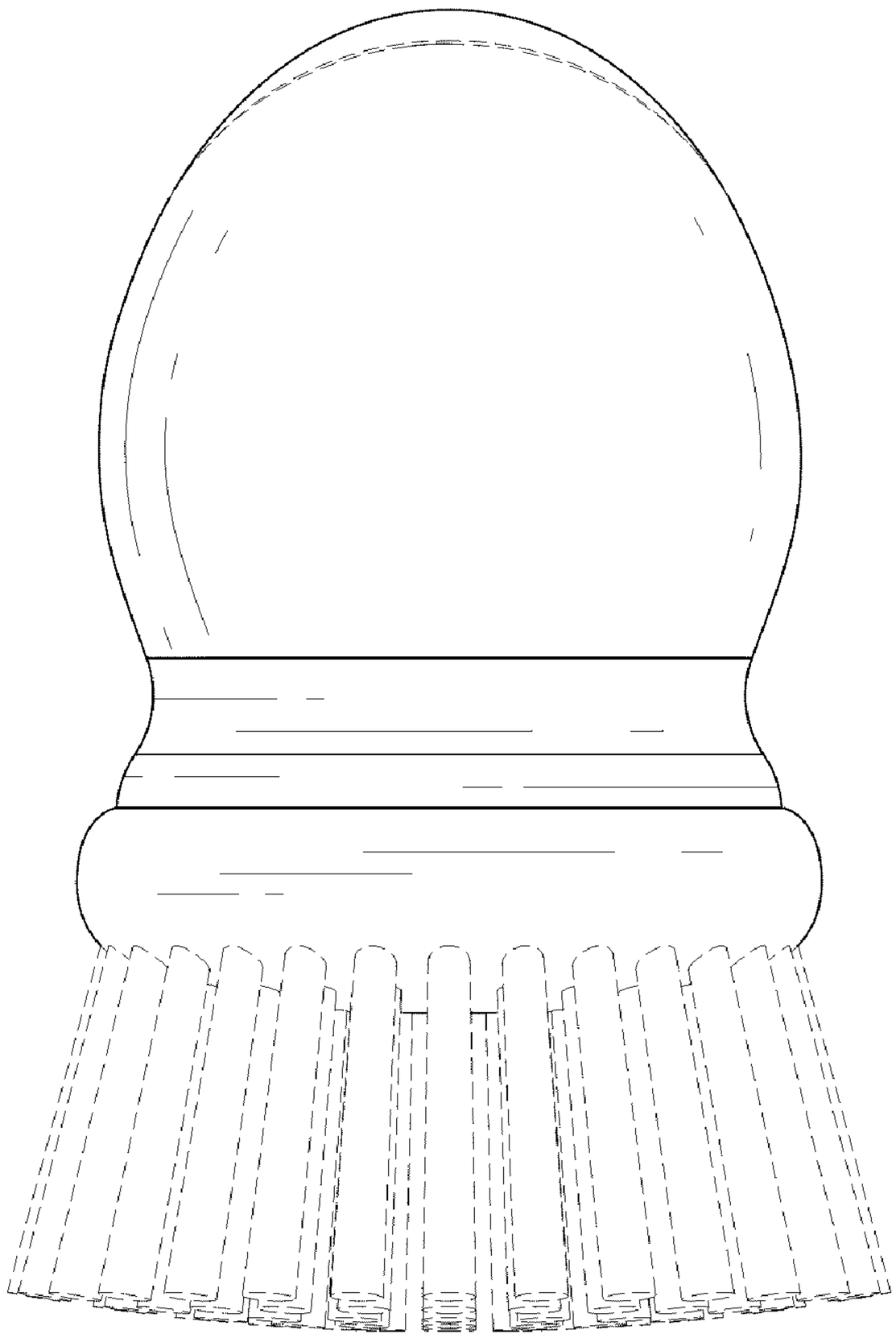

FIG. 4

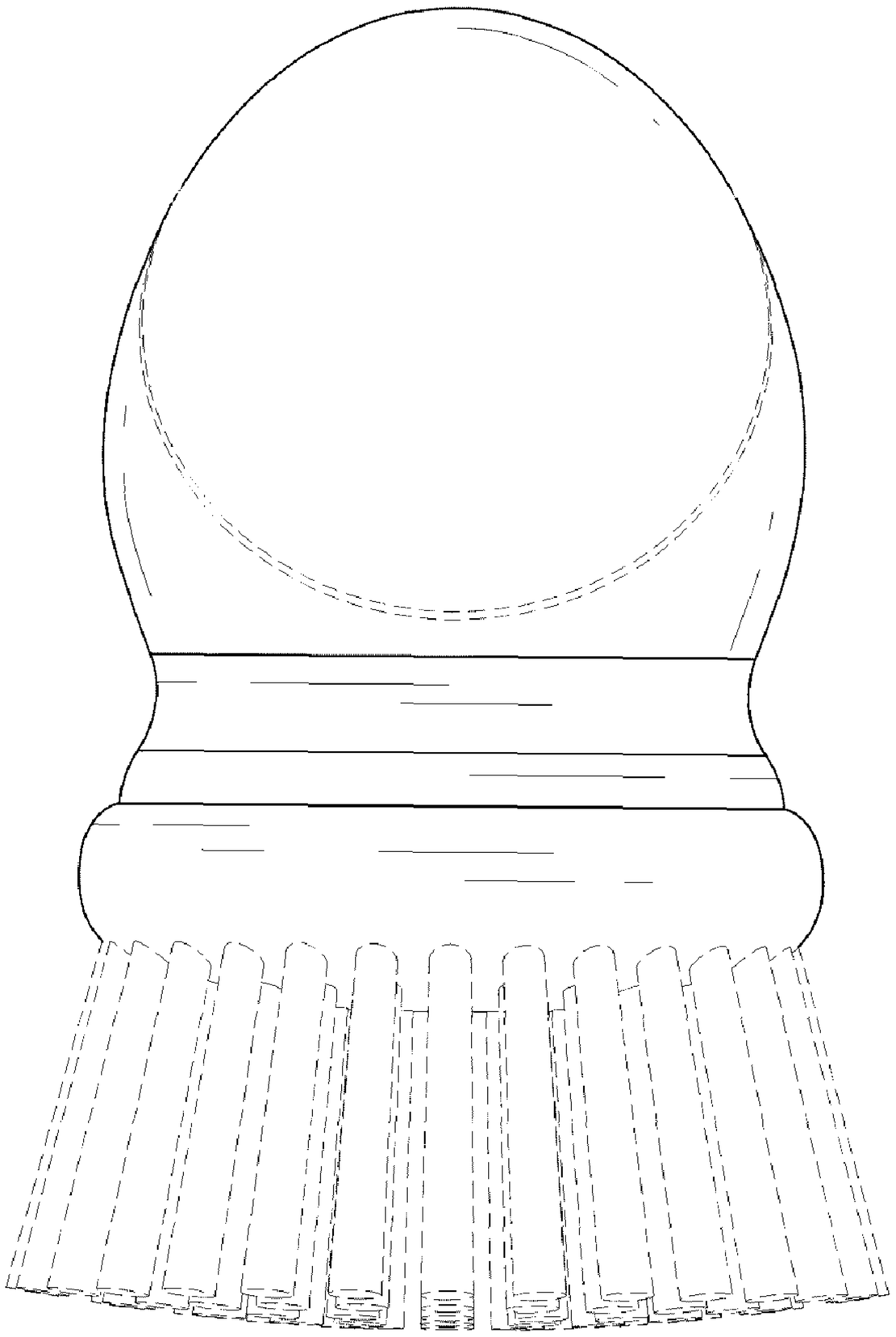

FIG. 5

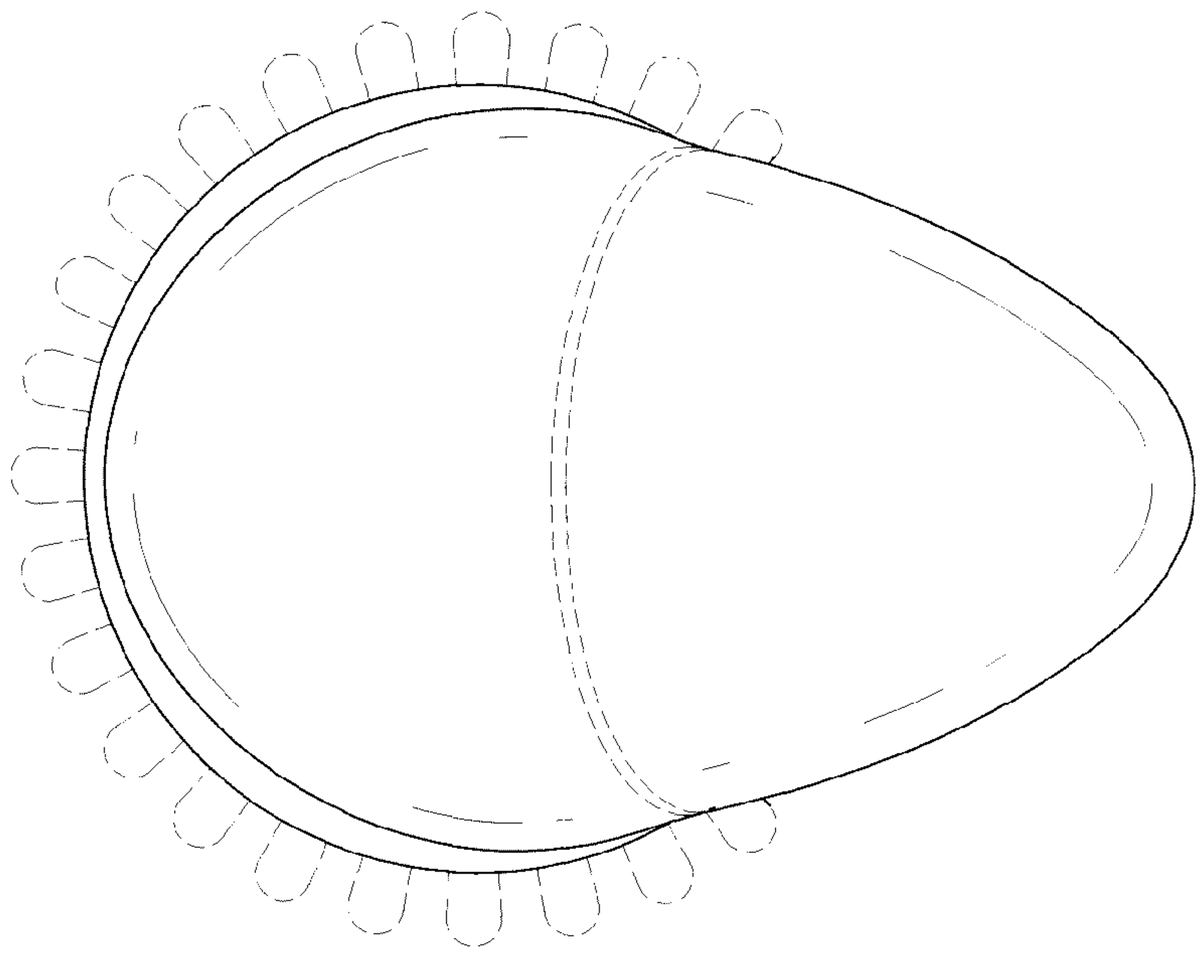

FIG. 6

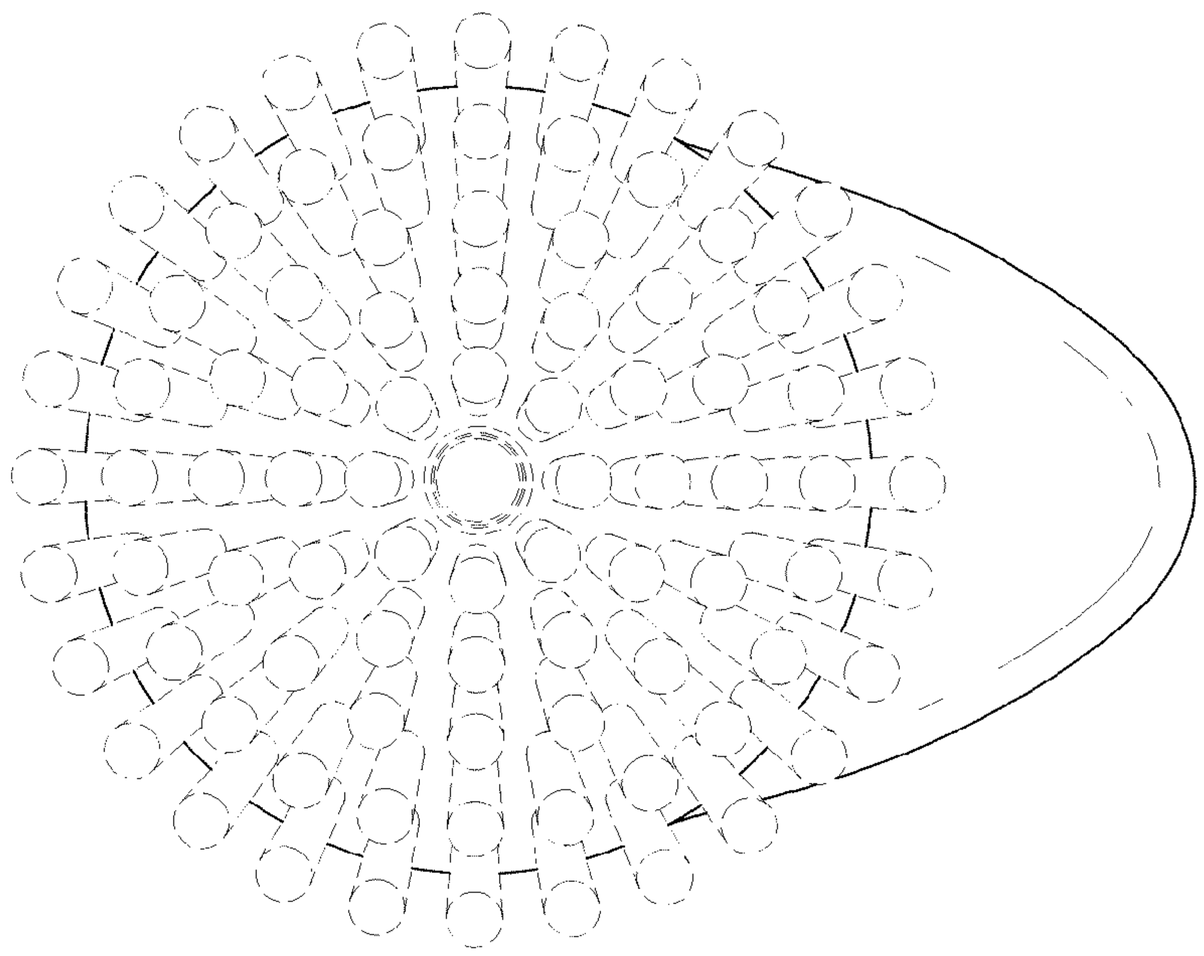

FIG. 7

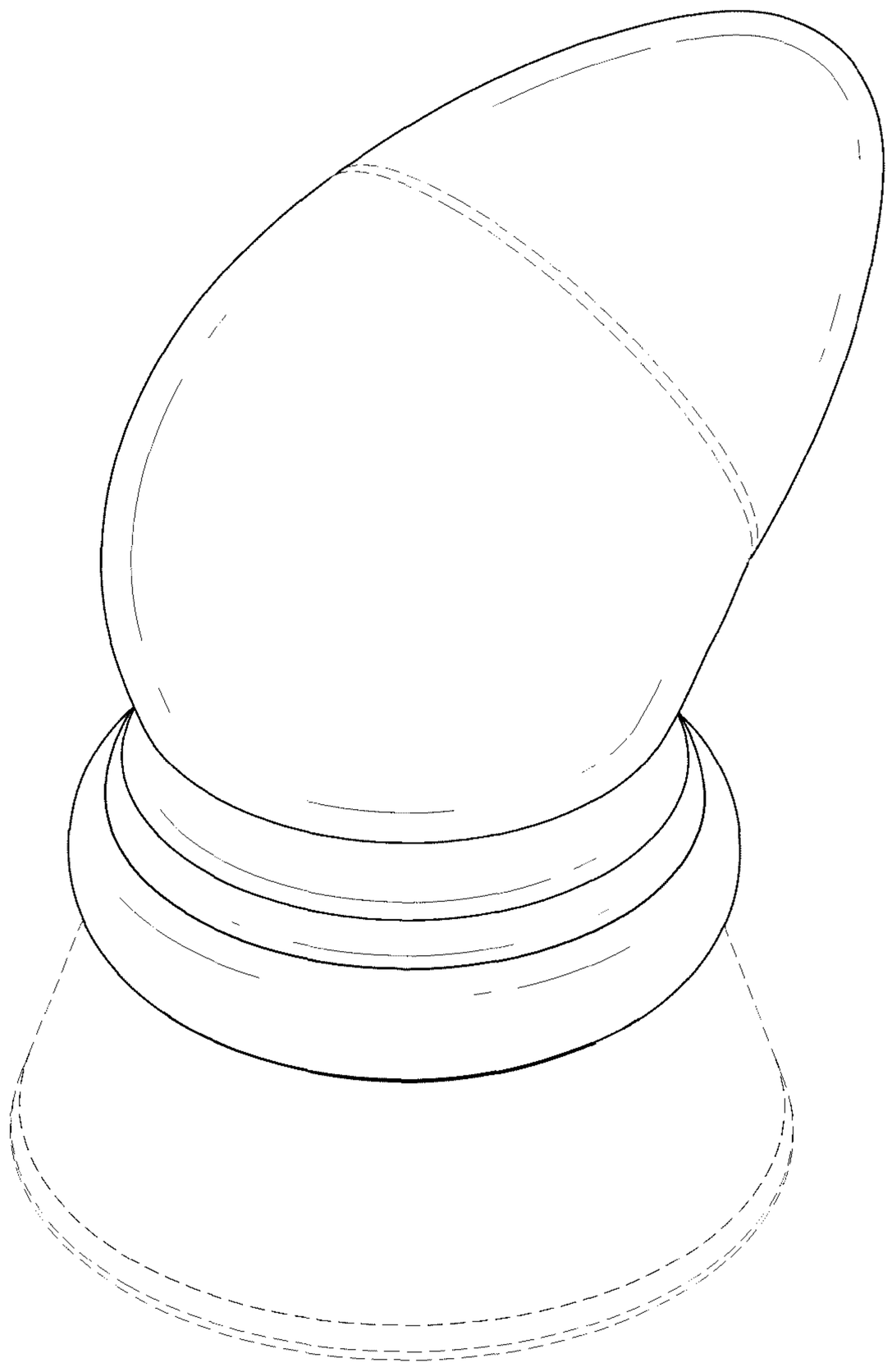

FIG. 8