US00D629630S

(12) United States Design Patent

Saul

(10) Patent No.: US D629,630 S
(45) Date of Patent: ** Dec. 28, 2010

(54) **CHAIR**

(75) Inventor: **Gregory M. Saul**, Charlotte, NC (US)
(73) Assignee: **Michigan Tube Swager & Fabricators, Inc.**, Temperance, MI (US)

(**) Term: **14 Years**
(21) Appl. No.: **29/336,986**
(22) Filed: **May 13, 2009**
(51) **LOC (9) Cl.** **06-01**
(52) **U.S. Cl.** **D6/380**
(58) **Field of Classification Search** D6/380, D6/374, 368, 334, 375, 379, 500–502; 297/239, 297/445.1, 16.1, 55–56, 58–59, 183.1
See application file for complete search history.

(56) **References Cited**

U.S. PATENT DOCUMENTS

4,400,031	A	*	8/1983	DeDecker	297/239
D297,890	S	*	10/1988	Hockenberry et al.	D6/367
D355,985	S	*	3/1995	Karten et al.	D6/374
D433,836	S	*	11/2000	Barile, Sr.	D6/380
D439,069	S	*	3/2001	Turner et al.	D6/380

(Continued)

Primary Examiner—Elizabeth A Albert
Assistant Examiner—Kelley A Donnelly
(74) *Attorney, Agent, or Firm*—Gifford, Krass, Sprinkle, Anderson & Citkowski, P.C.

(57) **CLAIM**

The ornamental design for a chair, as shown and described.

DESCRIPTION

FIG. **1** is a perspective view of a chair according to a first embodiment of the present invention;

FIG. **2** is a front elevational view of the chair of FIG. **1**;

FIG. **3** is a side elevational view of the chair of FIGS. **1** and **2**;

FIG. **4** is a rear elevational view of the chair of FIGS. **1-3**;

FIG. **5** is a side elevational view of the chair of FIGS. **1-4**, showing the side opposite the side shown in FIG. **3**;

FIG. **6** is a top view of the chair of FIGS. **1-5**;

FIG. **7** is a bottom view of the chair of FIGS. **1-6**;

FIG. **8** is a perspective view of a second embodiment of the chair;

FIG. **9** is a front elevational view of the chair of FIG. **8**;

FIG. **10** is a side elevational view of the chair of FIGS. **8** and **9**;

FIG. **11** is a rear elevational view of the chair of FIGS. **8-10**;

FIG. **12** is a side elevational view of the chair of FIGS. **8-11**, showing the side opposite the side shown in FIG. **10**;

FIG. **13** is a top view of the chair of FIGS. **8-12**;

FIG. **14** is a bottom view of the chair of FIGS. **8-13**;

FIG. **15** is a perspective view of a third embodiment of the chair;

FIG. **16** is a front elevational view thereof;

FIG. **17** is a side elevational view thereof;

FIG. **18** is a rear elevational view thereof; and

FIG. **19** is a side elevational view thereof; showing the opposite side view of FIG. **17**;

FIG. **20** is a top view thereof; and,

FIG. **21** is a bottom view thereof.

The broken lines are for the purpose of illustrating the environment of the design only and form no part of the claimed design.

1 Claim, 12 Drawing Sheets

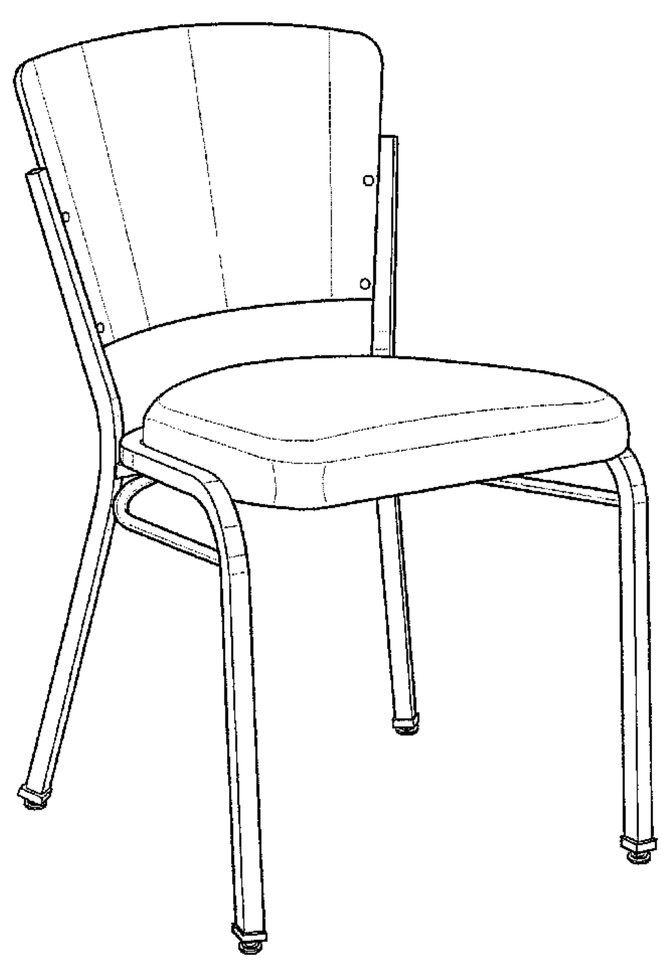

U.S. PATENT DOCUMENTS

D464,493 S * 10/2002 Stannard D6/368
D465,940 S * 11/2002 Nien D6/368
D469,969 S * 2/2003 Glass et al. D6/374
D474,620 S * 5/2003 Striebel D6/374
D481,550 S * 11/2003 Astle D6/374
D508,339 S * 8/2005 Astle D6/374
D519,291 S * 4/2006 Higgs et al. D6/367
D560,384 S * 1/2008 Stauber D6/374
7,452,035 B2 * 11/2008 Astle et al. 297/440.22
D591,968 S * 5/2009 Pinaffo et al. D6/380
D598,667 S * 8/2009 Kubryk D6/369
D600,465 S * 9/2009 Kumazawa D6/373
D607,221 S * 1/2010 Shen D6/367
D608,105 S * 1/2010 Kubryk D6/380
D616,658 S * 6/2010 Niermeyer D6/368
D617,108 S * 6/2010 Niermeyer D6/368
D618,006 S * 6/2010 Price et al. D6/380
2003/0102700 A1 * 6/2003 Lin 297/183.9

* cited by examiner

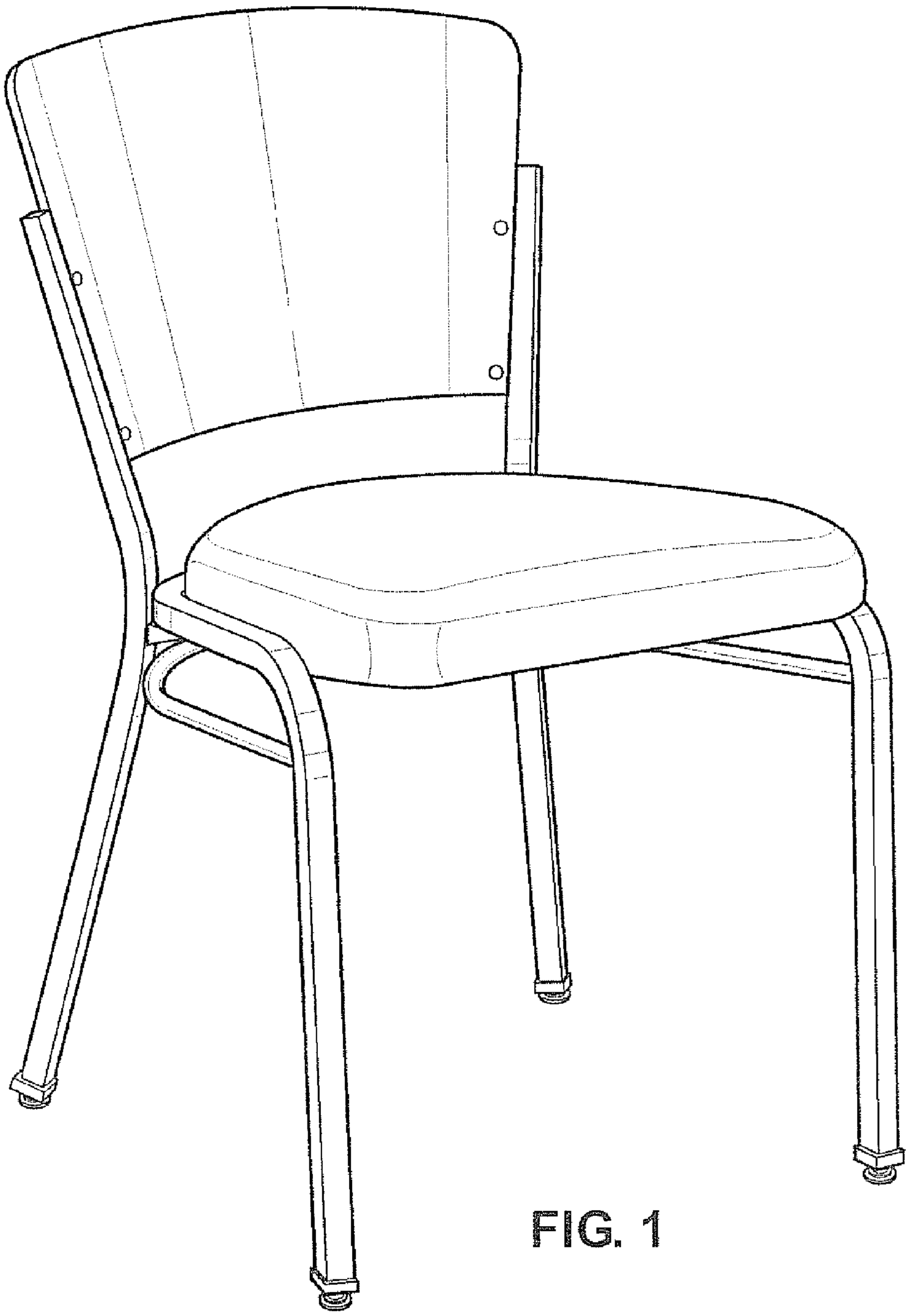

FIG. 1

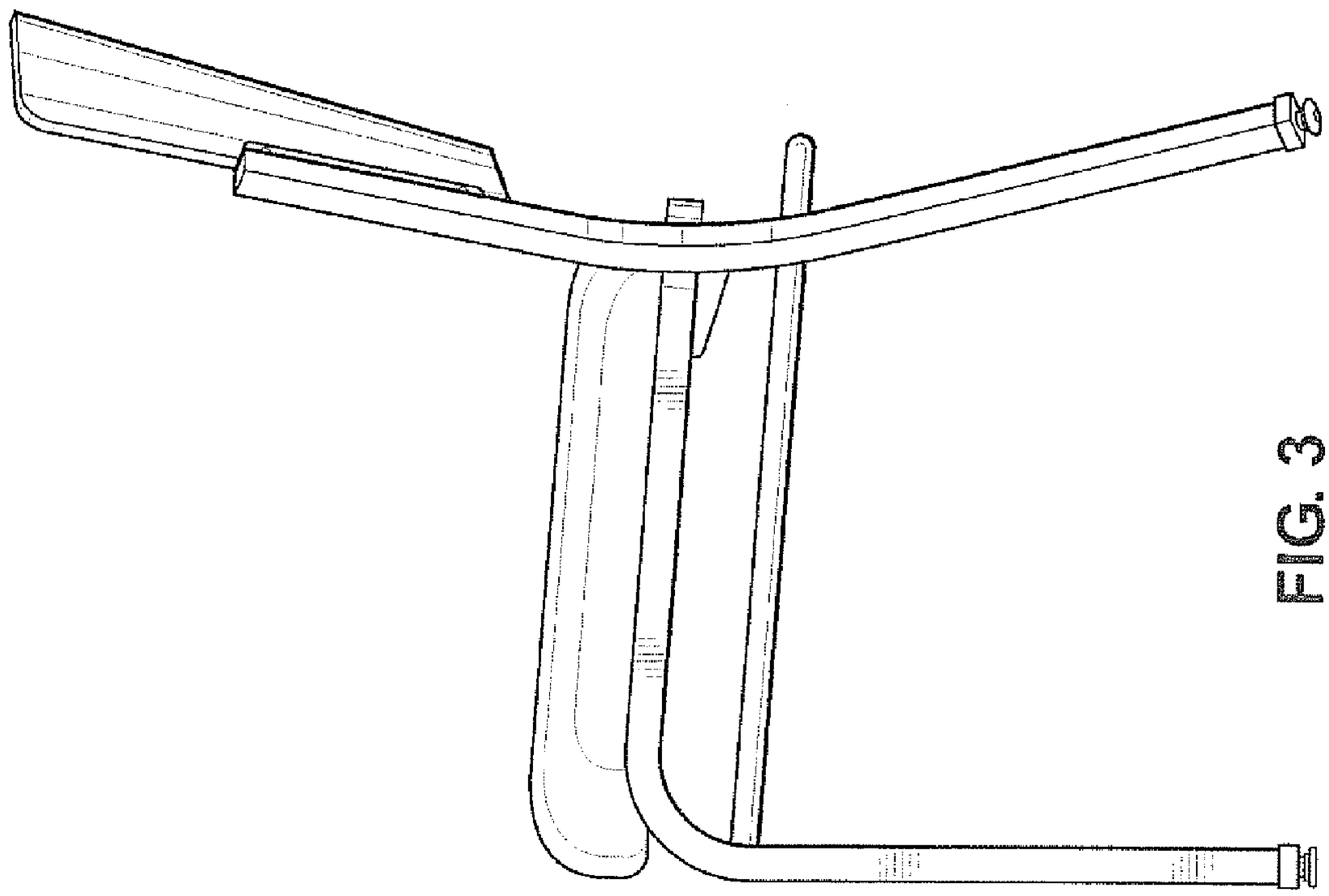

FIG. 3

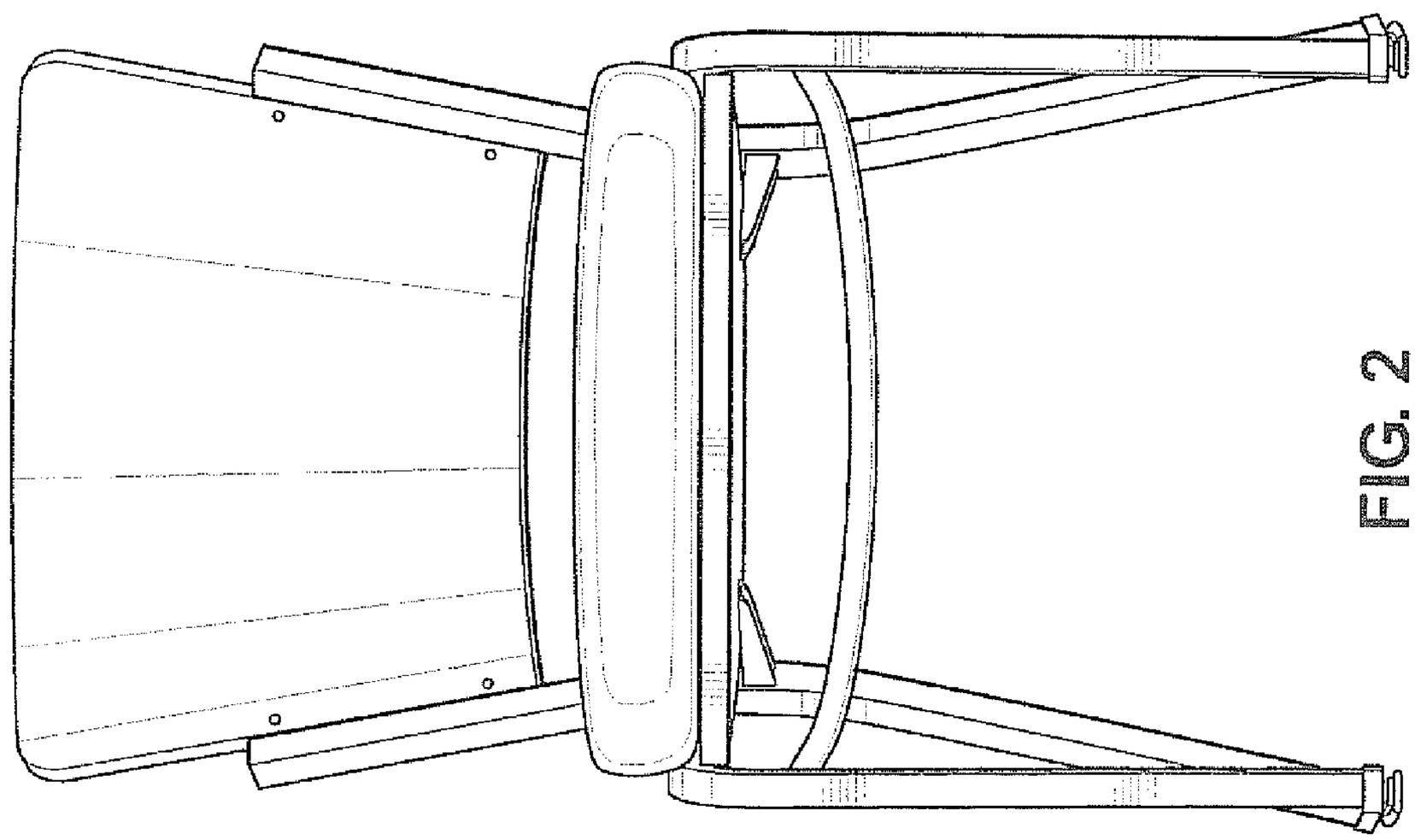

FIG. 2

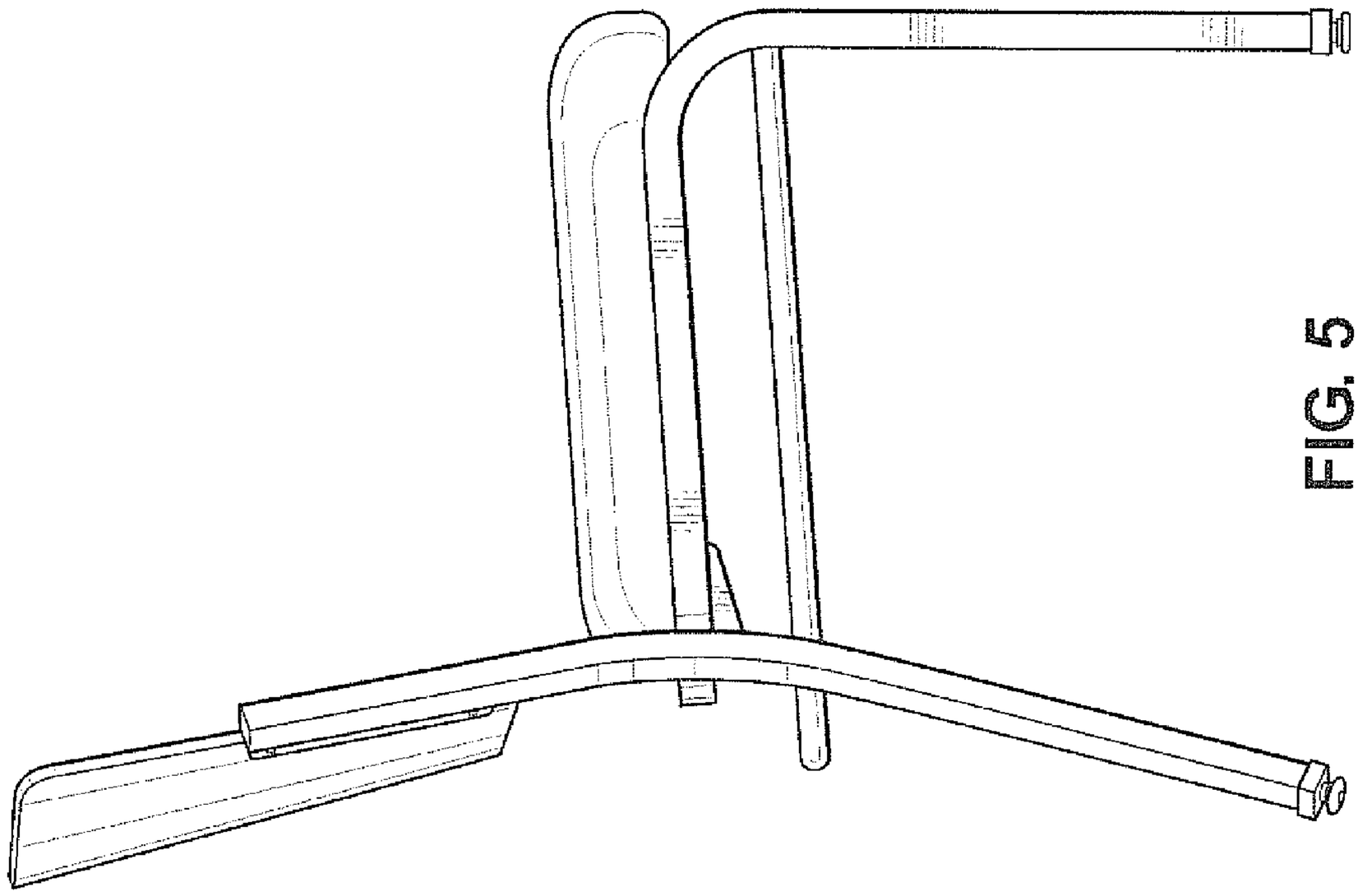

FIG. 5

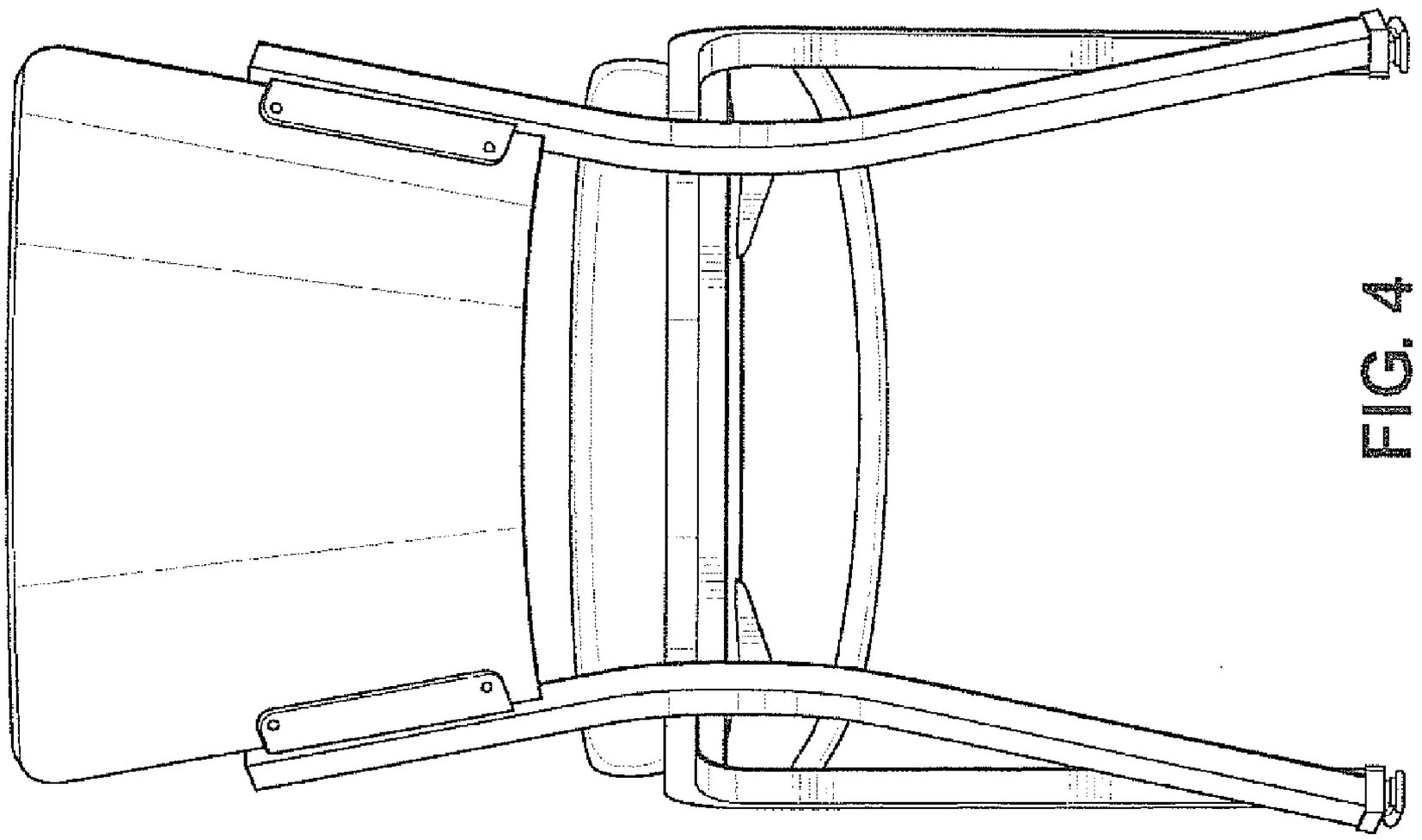

FIG. 4

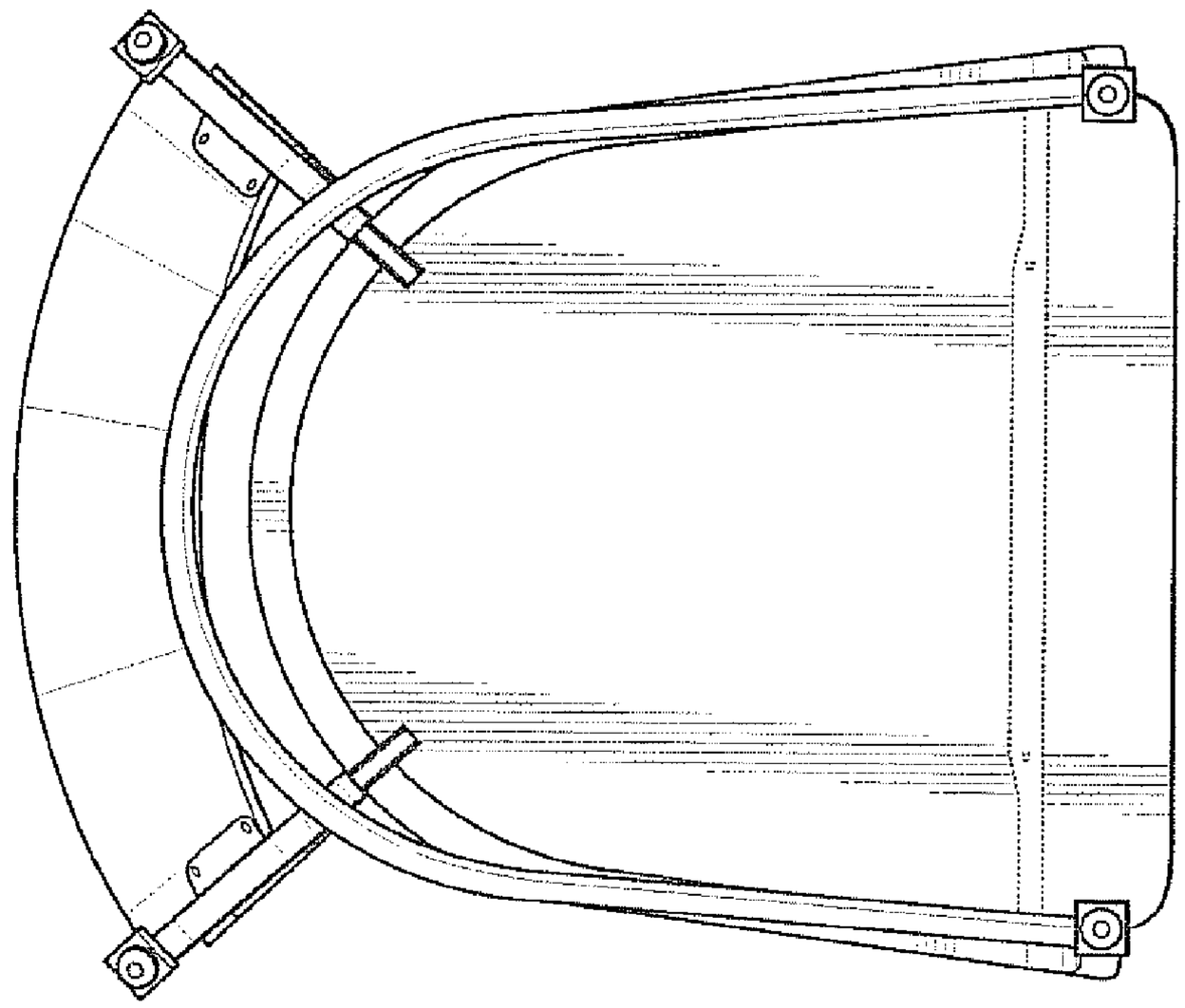

FIG. 7

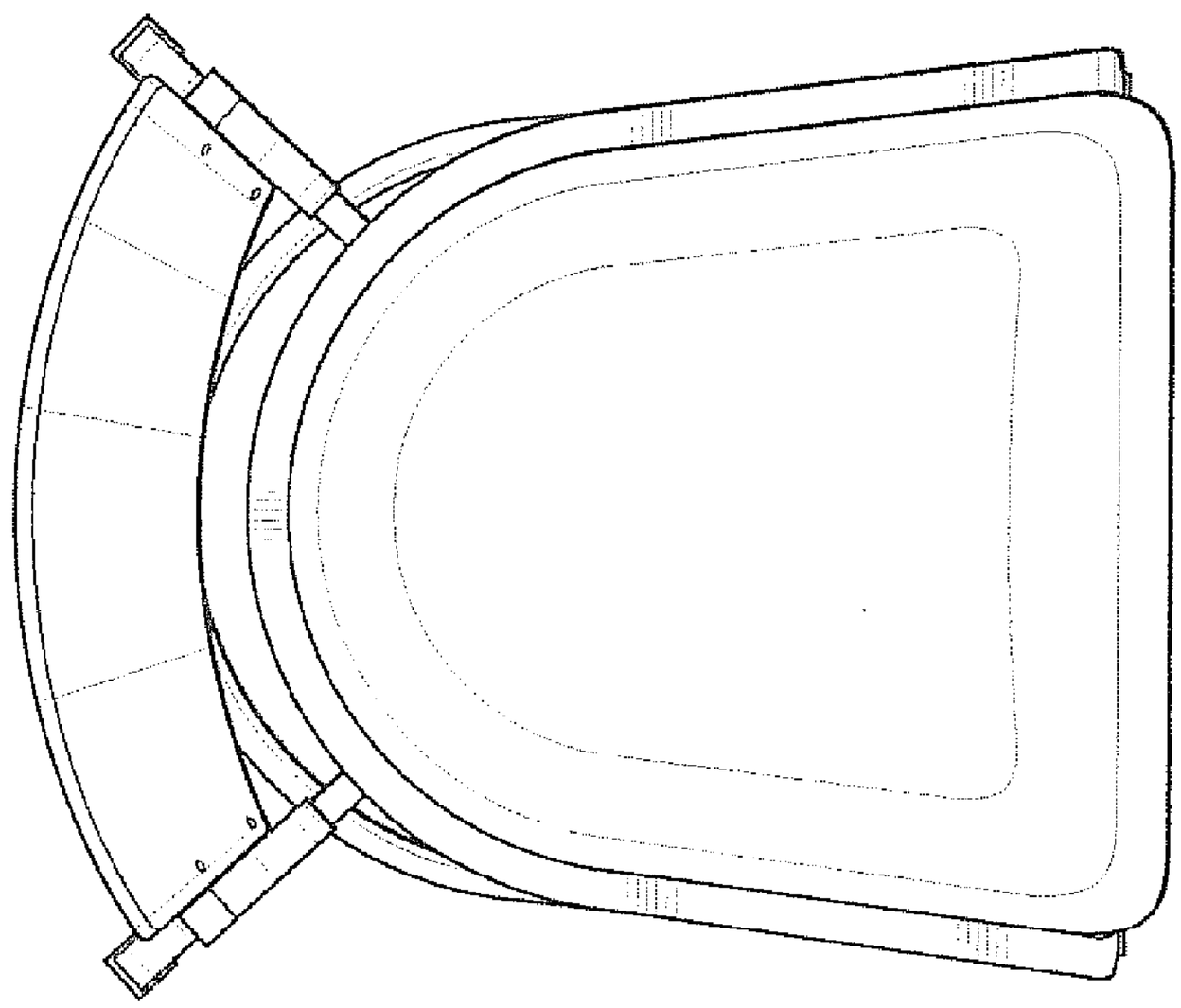

FIG. 6

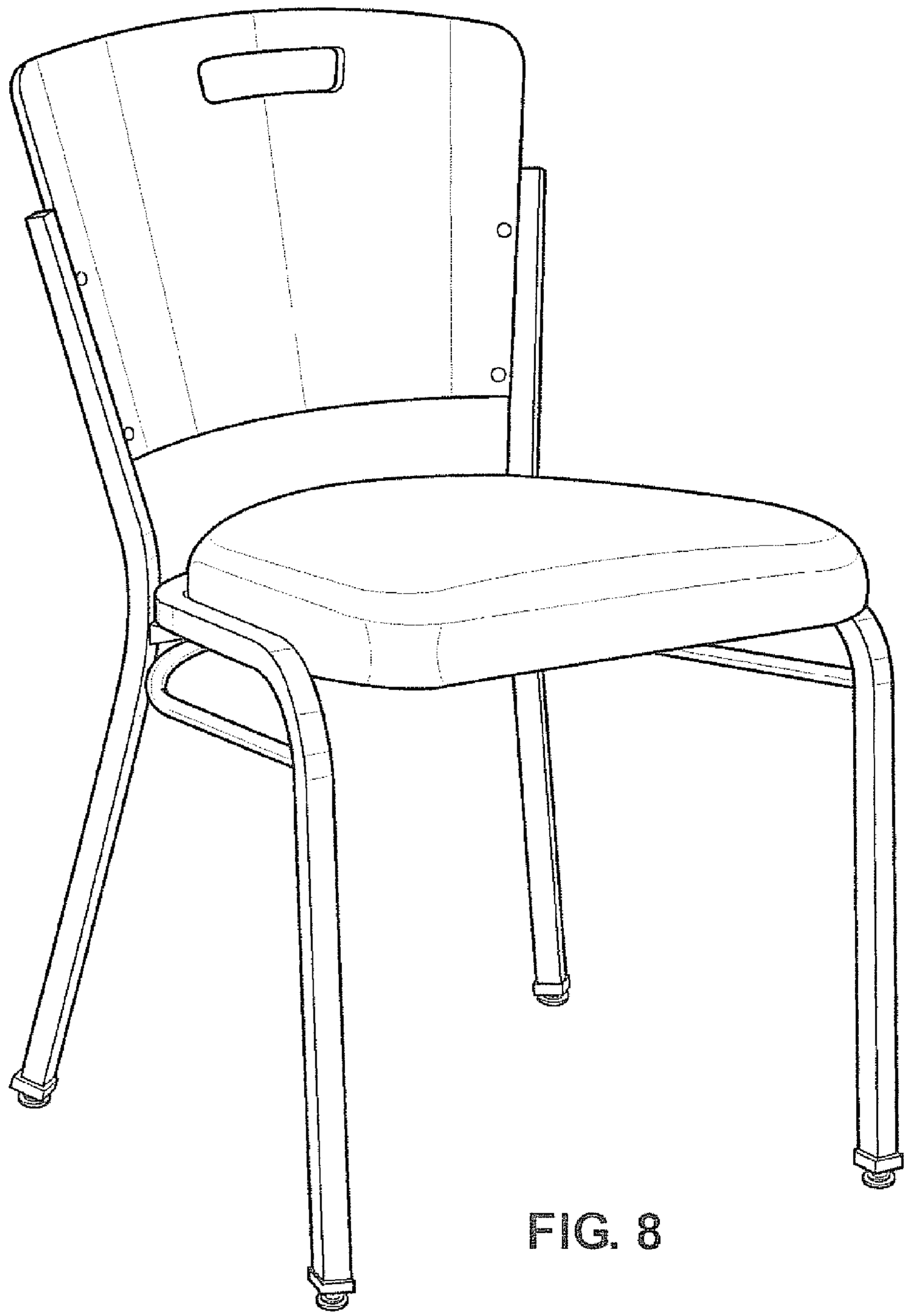

FIG. 8

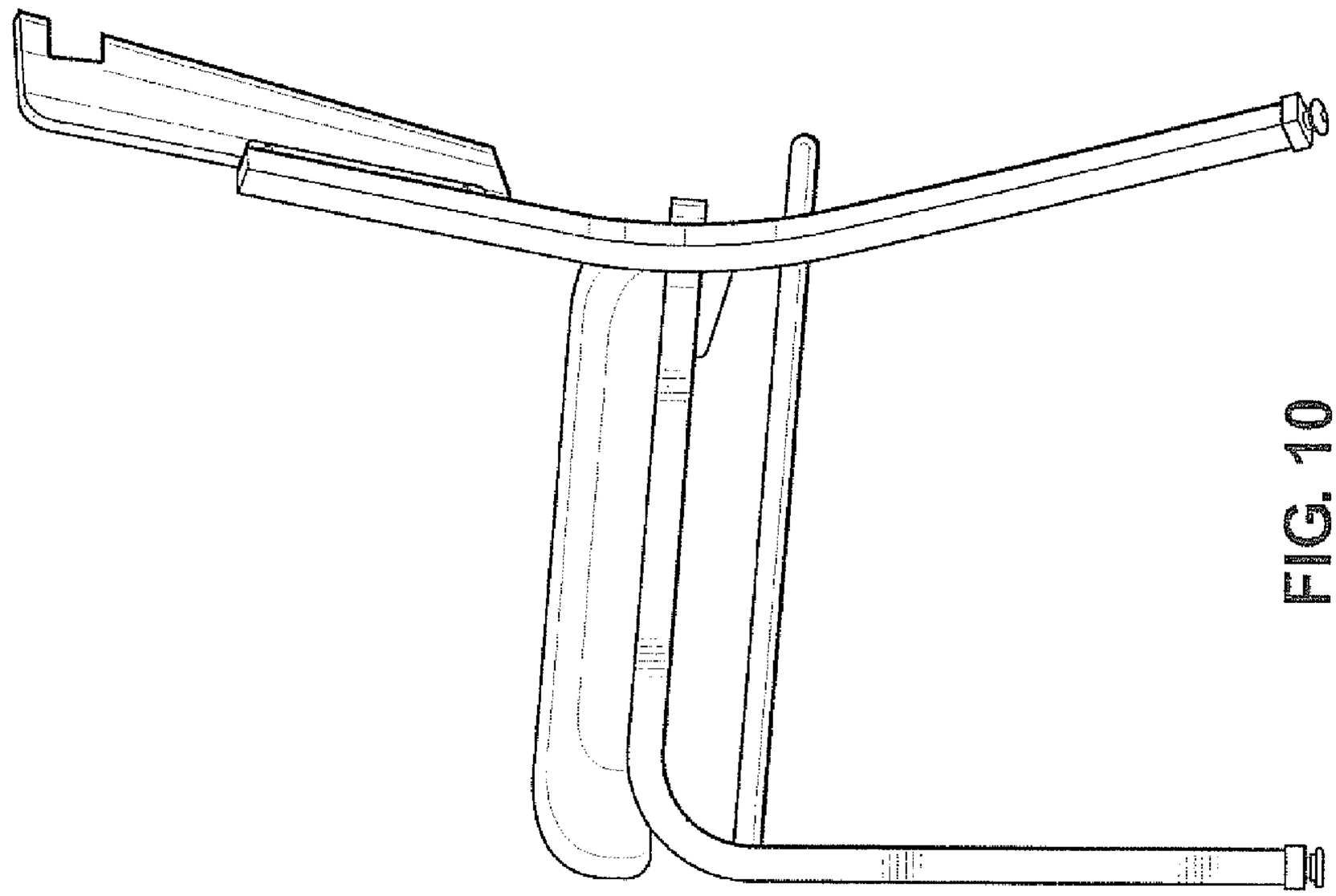

FIG. 10

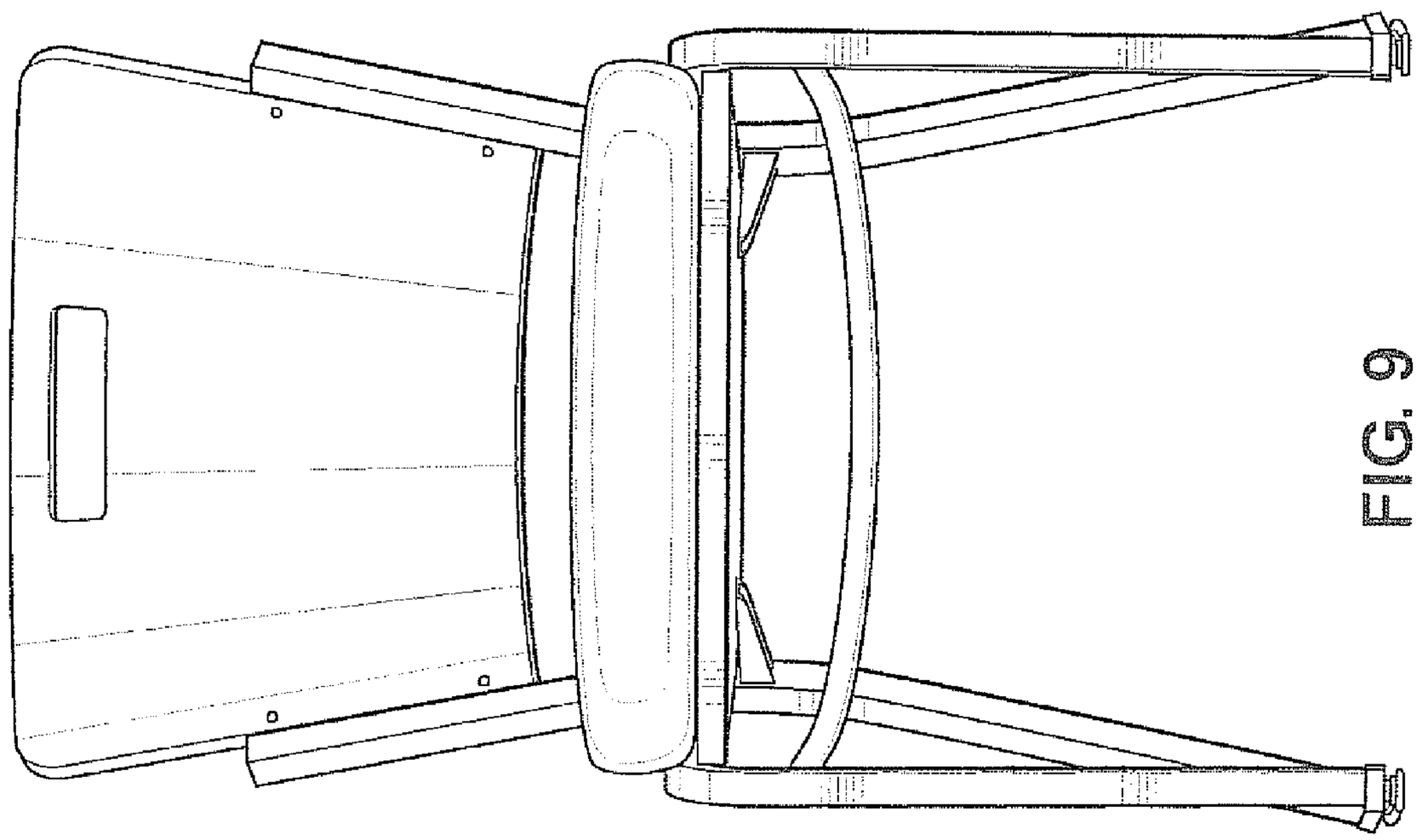

FIG. 9

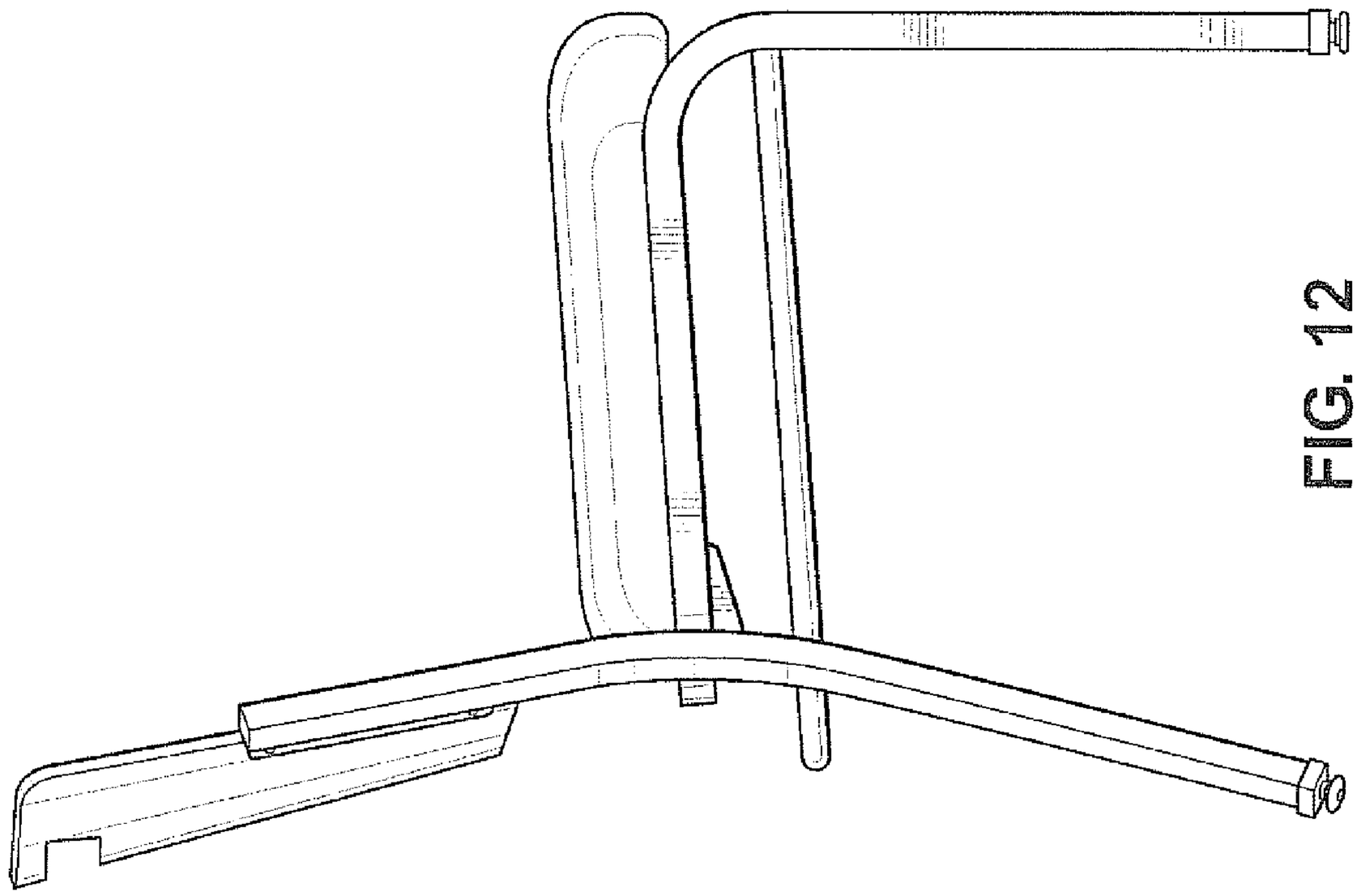

FIG. 12

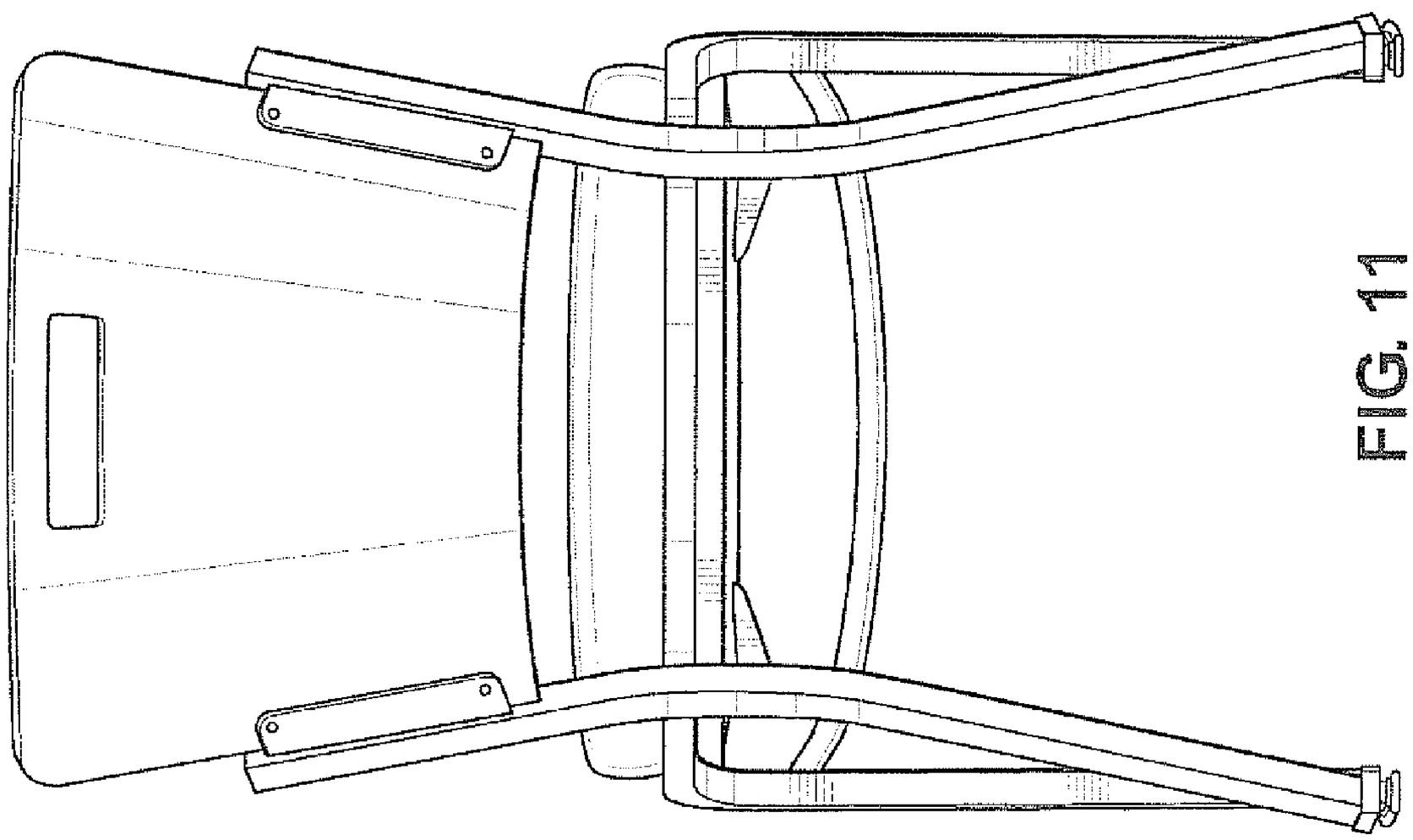

FIG. 11

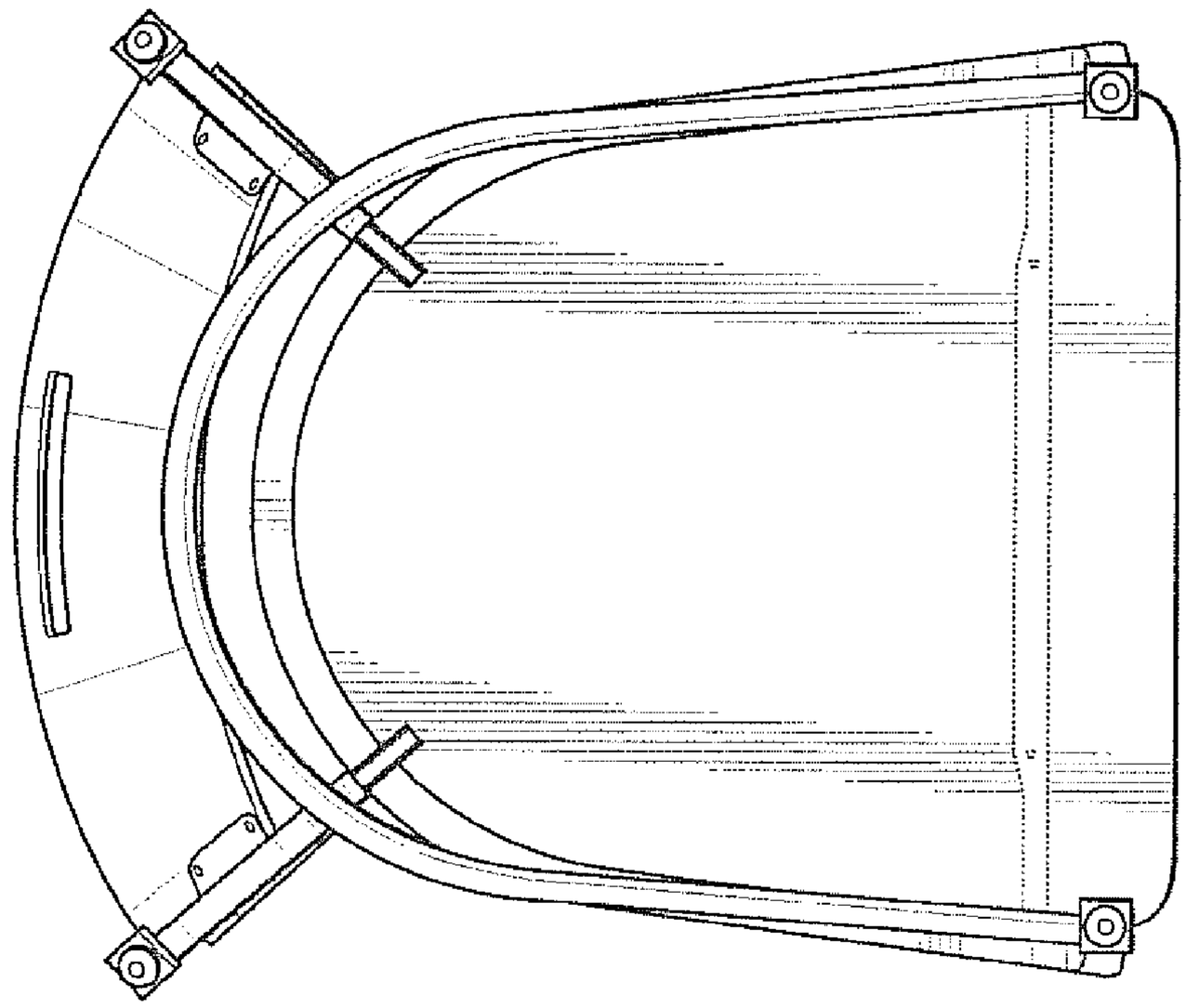

FIG. 14

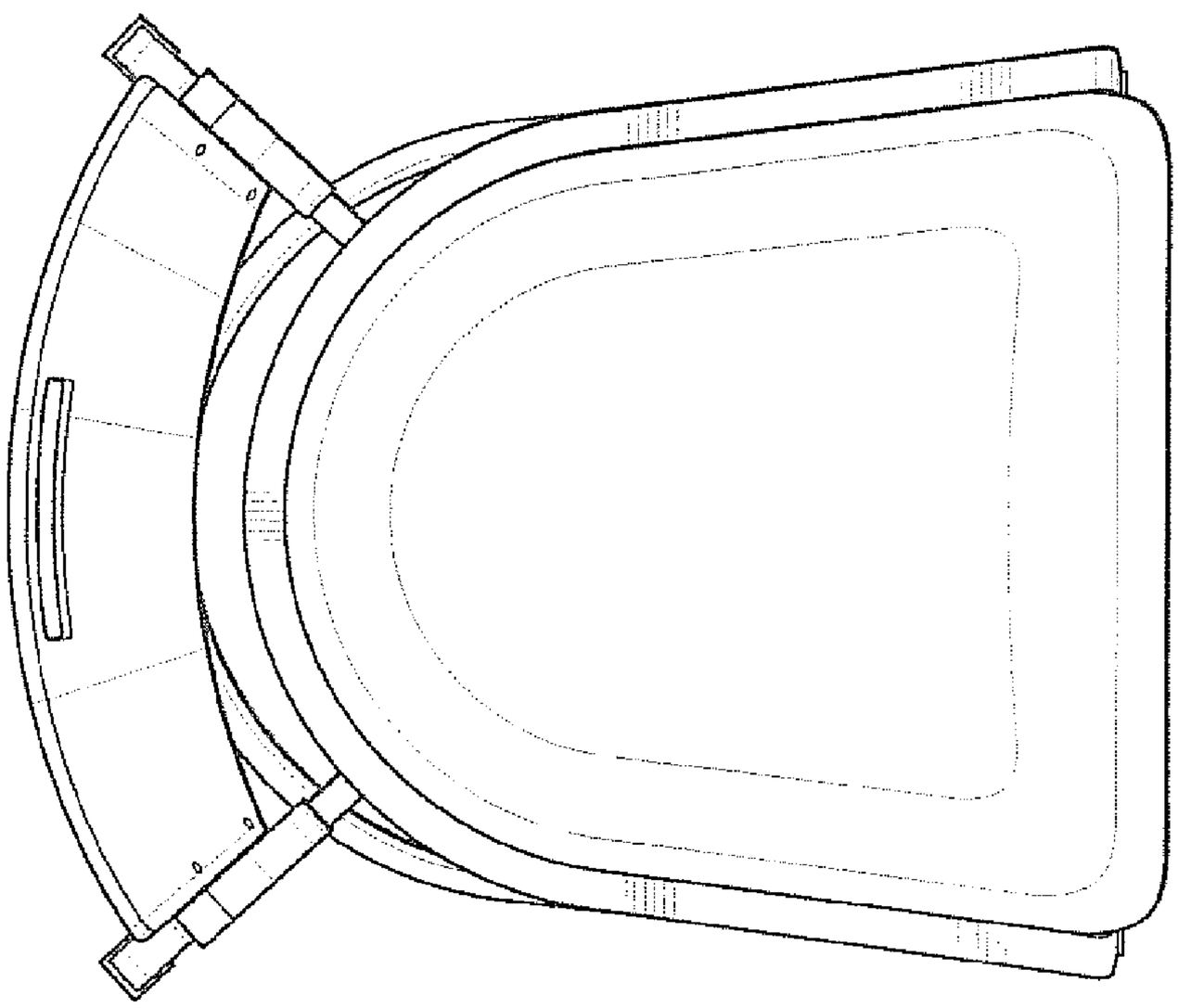

FIG. 13

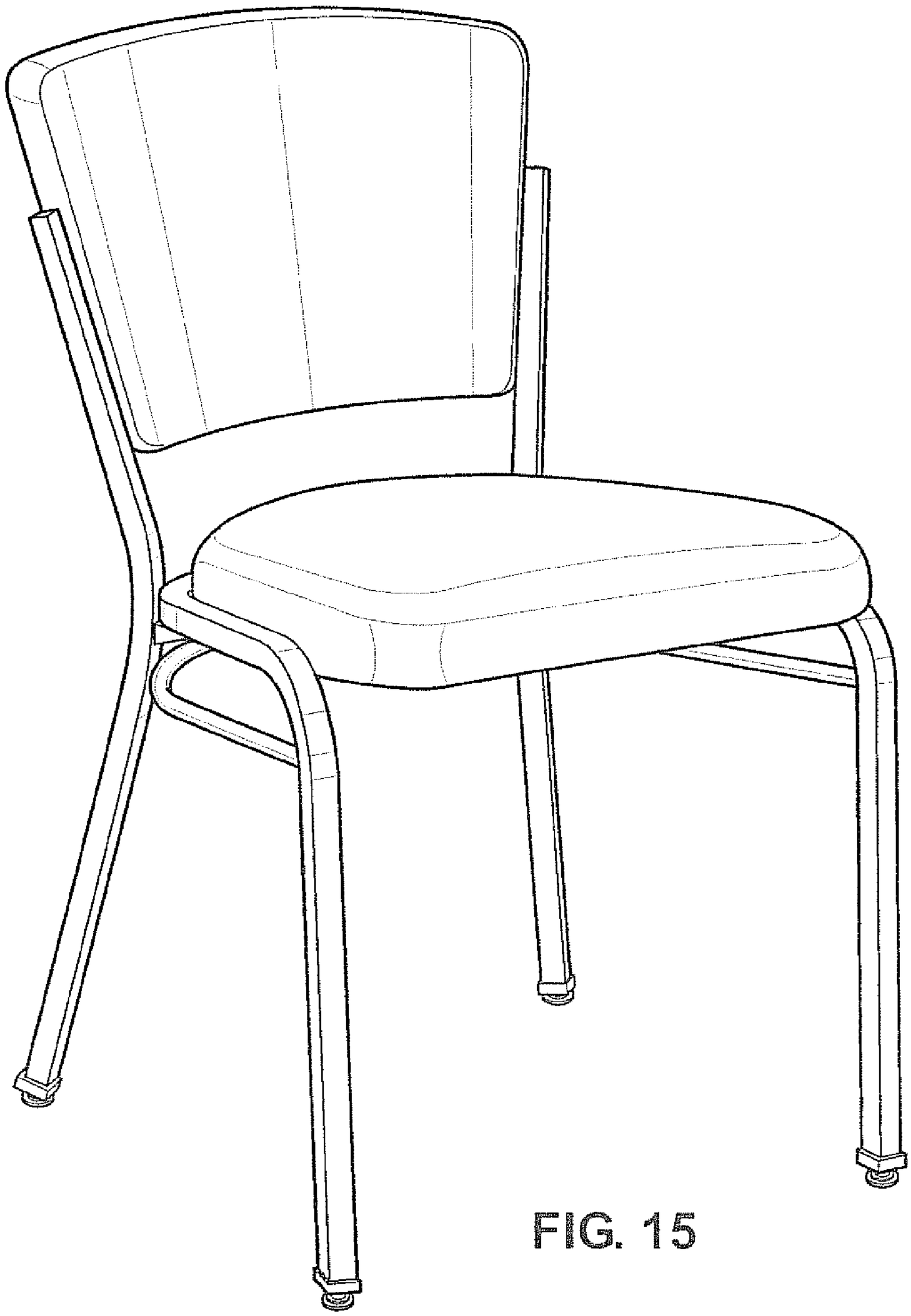

FIG. 15

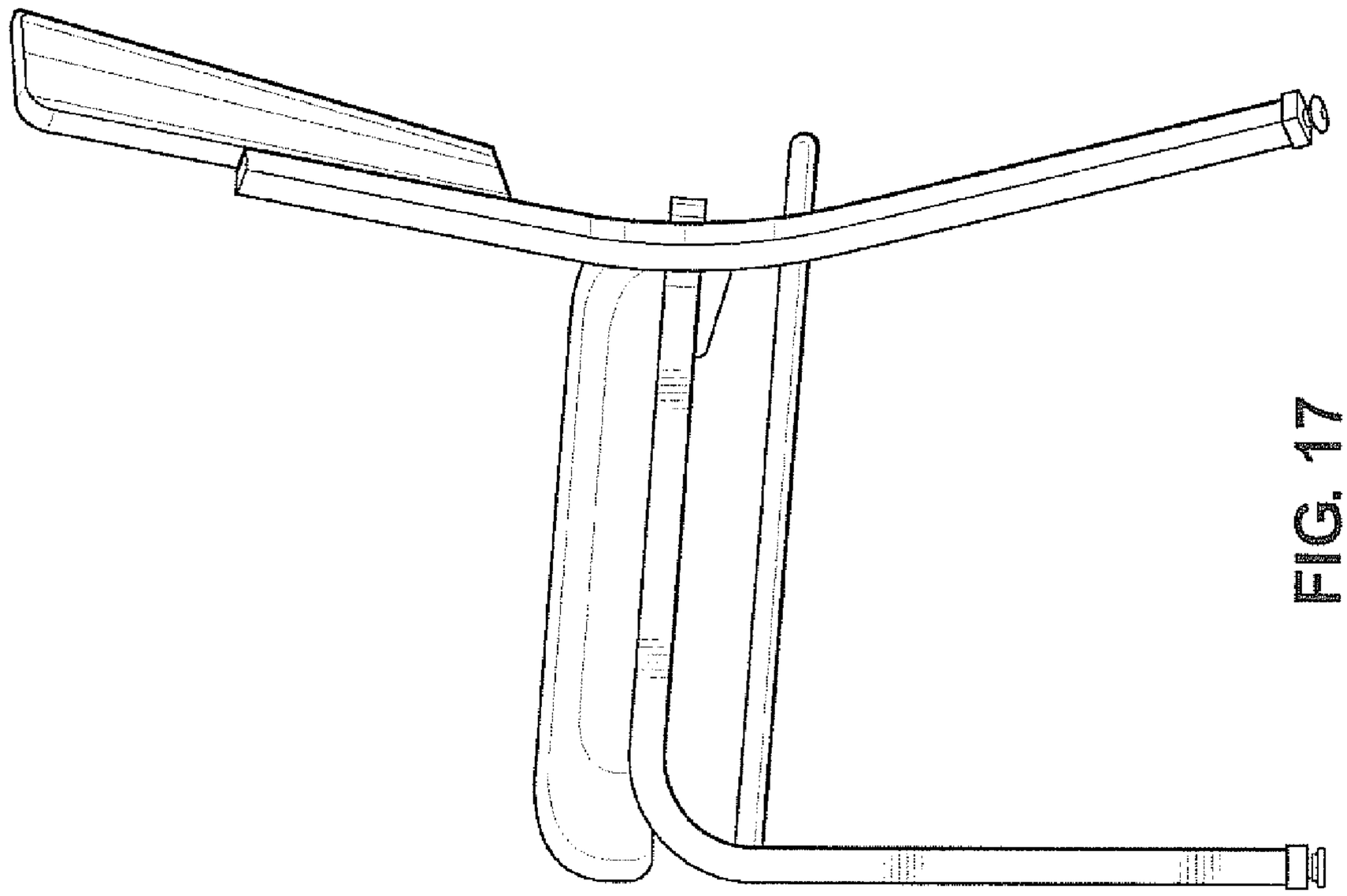

FIG. 17

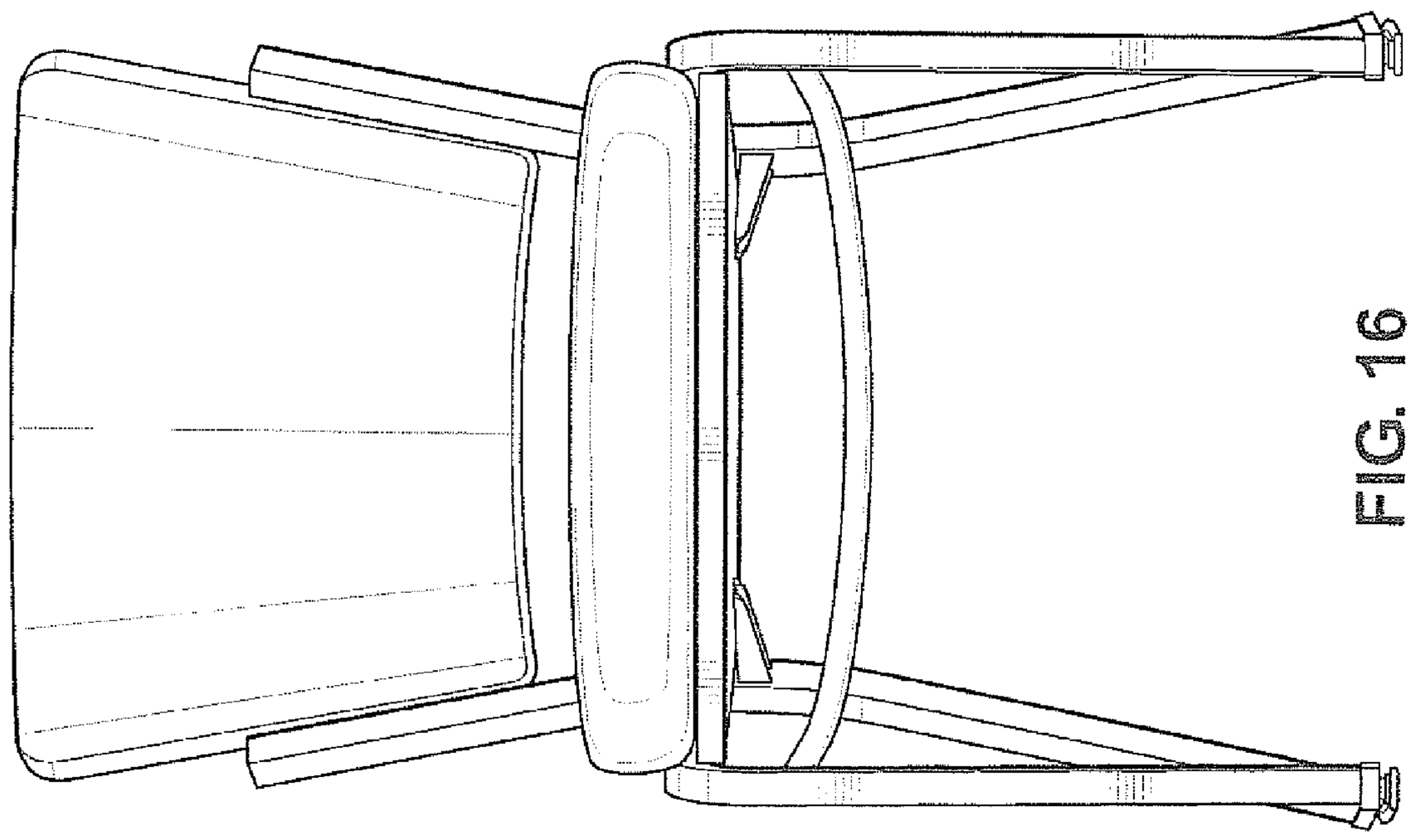

FIG. 16

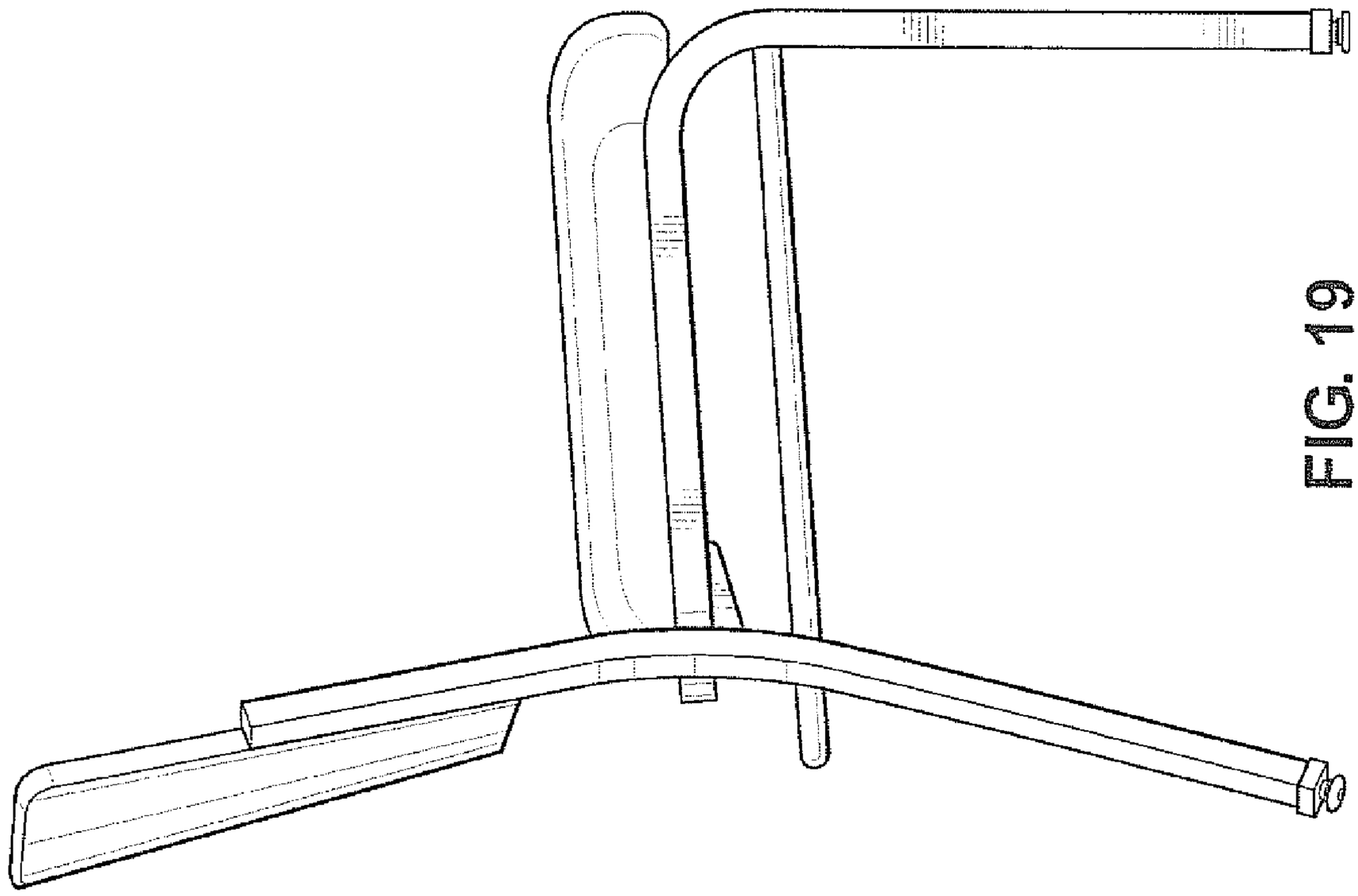

FIG. 19

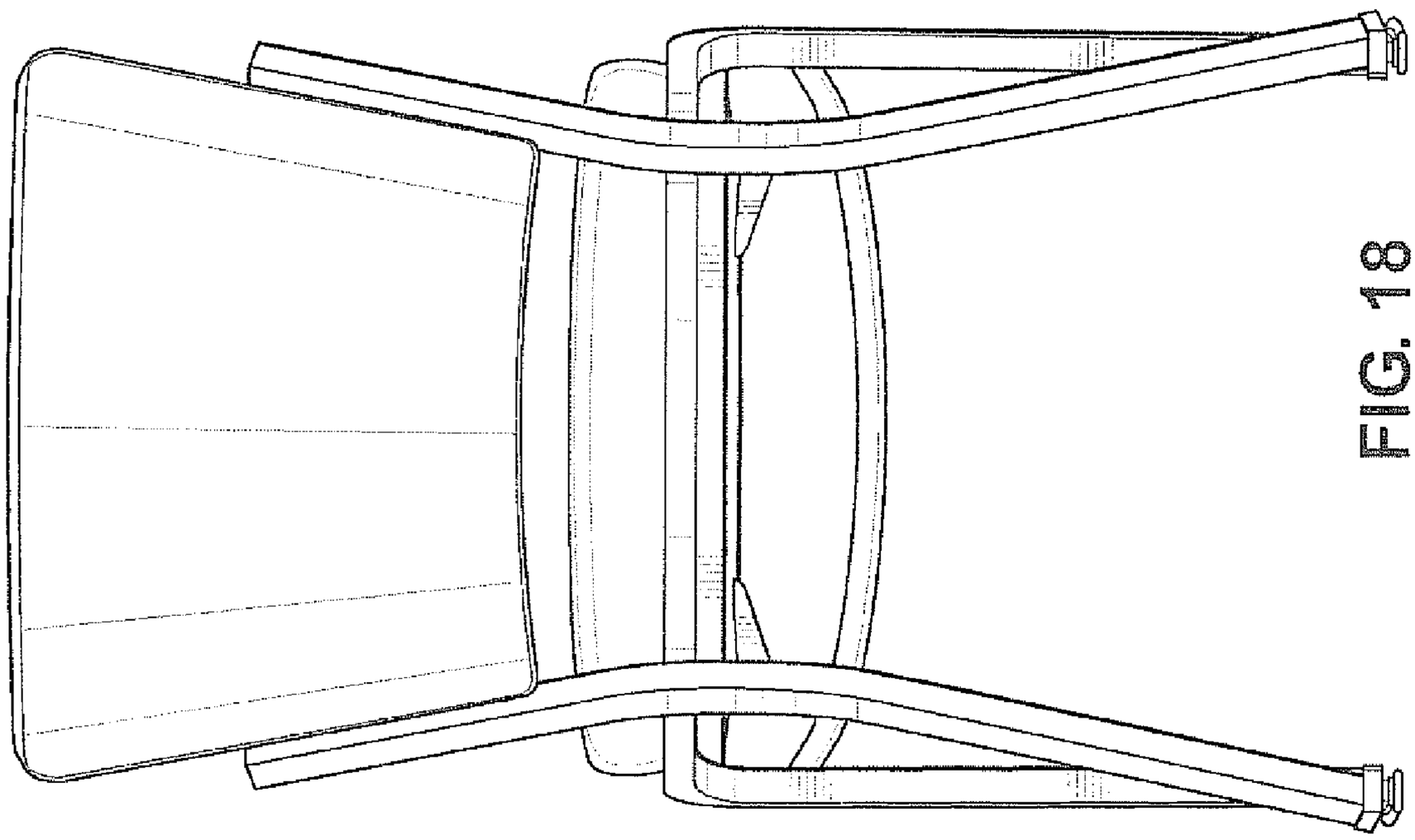

FIG. 18

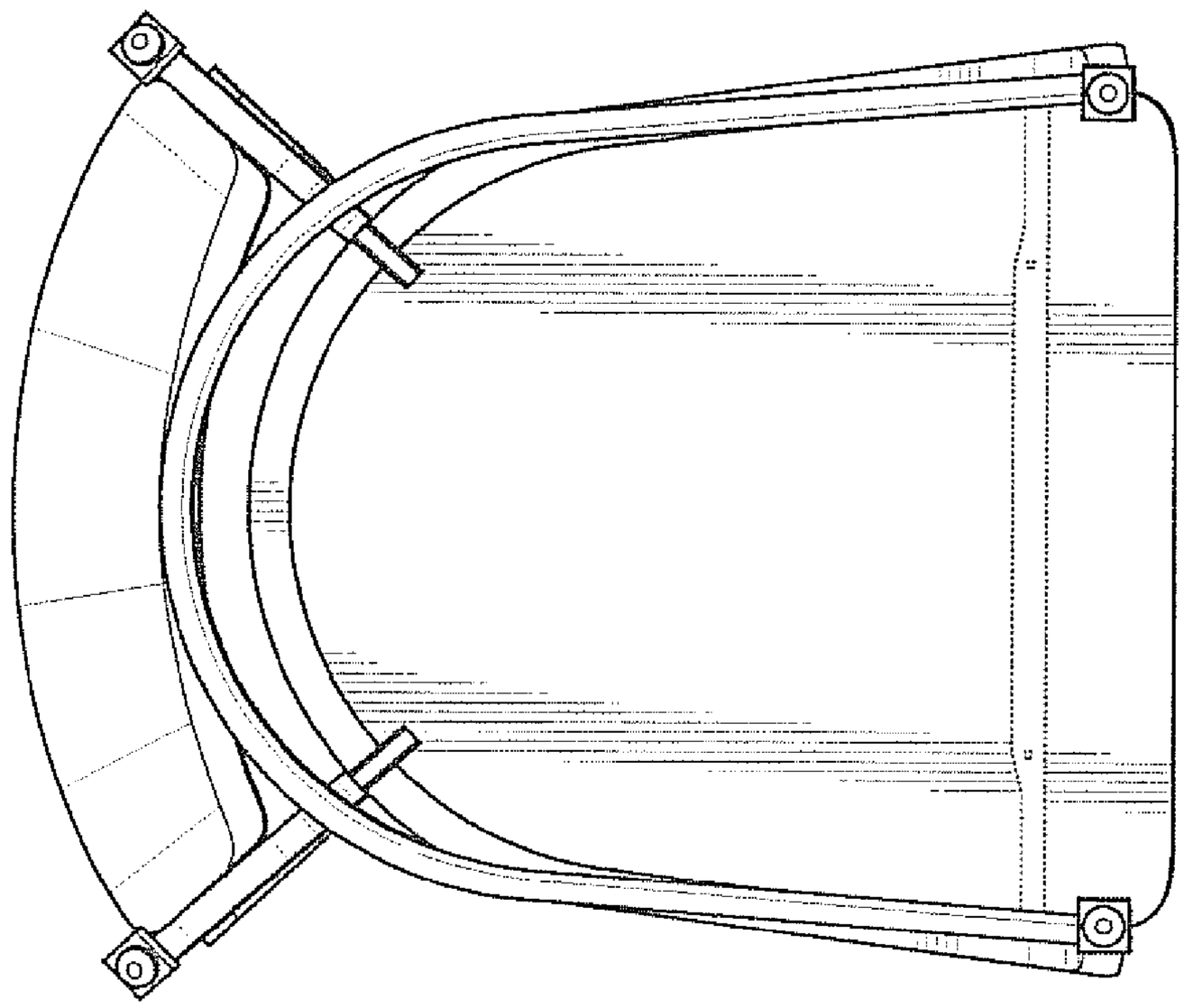

FIG. 21

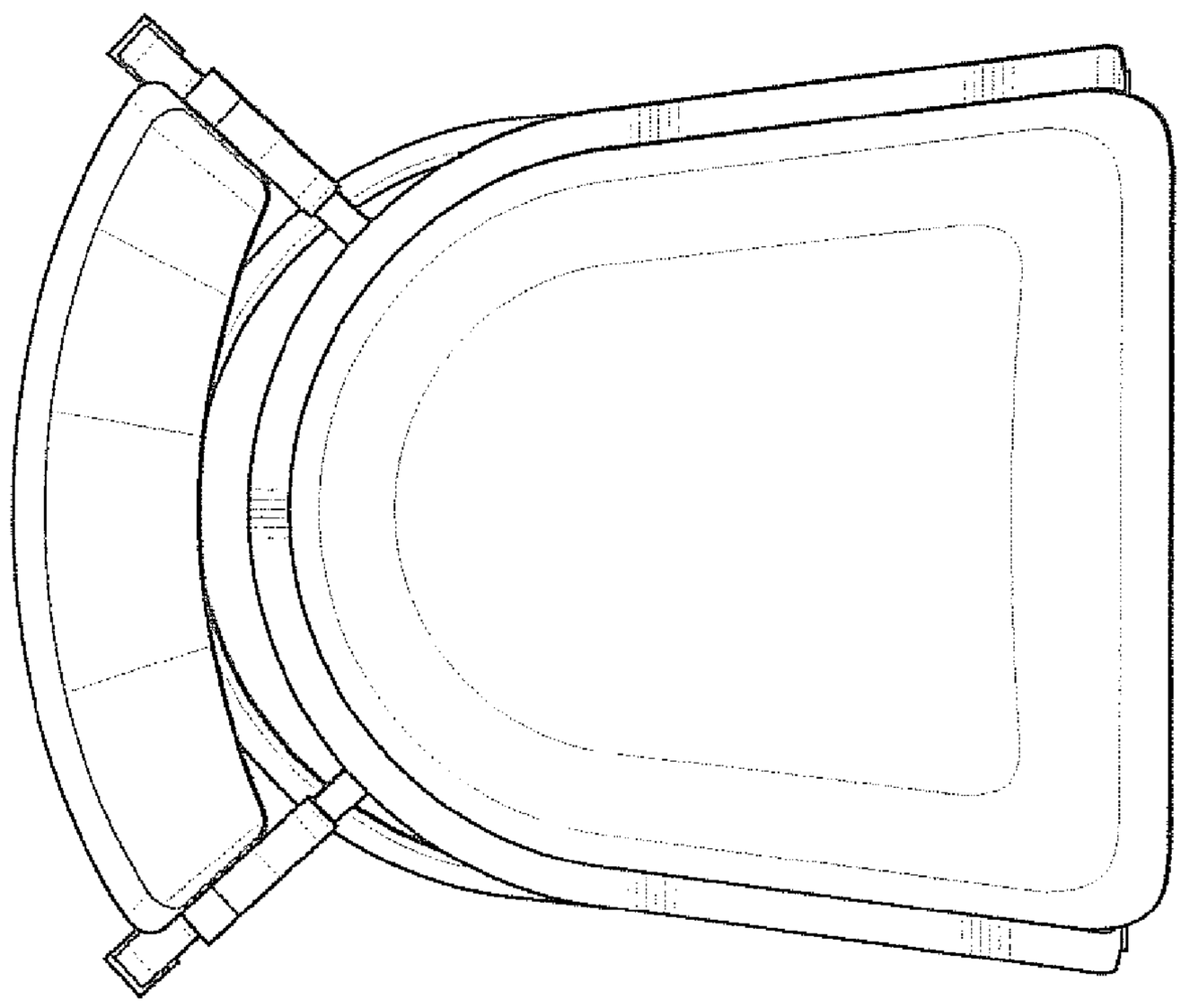

FIG. 20