US00D629369S

(12) United States Design Patent

Lin

(10) Patent No.: US D629,369 S
(45) Date of Patent: ** Dec. 21, 2010

(54) **LIGHT EMITTING DIODE**

(75) Inventor: **Jung-Chiuan Lin**, Tucheng (TW)

(73) Assignee: **Everlight Electronics Co., Ltd.**, Tucheng, Taipei County (TW)

(**) Term: **14 Years**

(21) Appl. No.: **29/360,763**

(22) Filed: **Apr. 30, 2010**

(51) **LOC (9) Cl.** **13-03**
(52) **U.S. Cl.** **D13/180**
(58) **Field of Classification Search** D13/180; D26/2; 257/79, 80, 81, 88, 89, 95, 98, 99, 257/100, E33.058; 313/483, 498, 500; 362/555, 362/800
See application file for complete search history.

(56) **References Cited**

U.S. PATENT DOCUMENTS

D578,969	S	*	10/2008	Kobayakawa	D13/180
D584,246	S	*	1/2009	Low et al.	D13/180
D595,245	S	*	6/2009	Kim et al.	D13/180
D595,675	S	*	7/2009	Wang et al.	D13/180
D596,591	S	*	7/2009	In et al.	D13/180
D597,971	S	*	8/2009	Kobayakawa et al.	D13/180
D599,750	S	*	9/2009	Kim et al.	D13/180
D608,309	S	*	1/2010	Kim	D13/180

FOREIGN PATENT DOCUMENTS

JP	1342132	10/2008
JP	1383066	3/2010
JP	1383142	3/2010
JP	1383440	3/2010
KR	30-0437750	1/2007
KR	30-0471434	12/2007
KR	30-0498174	7/2008
KR	30-0506111	9/2008
KR	30-0530344	6/2009
KR	30-0531036	6/2009
KR	30-0546939	12/2009

* cited by examiner

Primary Examiner—Selina Sikder
(74) *Attorney, Agent, or Firm*—Thomas, Kayden, Horstemeyer & Risley, LLP

(57) **CLAIM**

The ornamental design for a light emitting diode, as shown and described.

DESCRIPTION

FIG. **1** is a perspective view of a light emitting diode showing the claimed design;

FIG. **2** is another perspective view thereof;

FIG. **3** is a front elevational view thereof;

FIG. **4** is a rear side elevational view thereof;

FIG. **5** is a left side elevational view thereof;

FIG. **6** is a right side elevational view thereof;

FIG. **7** is a top plan view thereof;

FIG. **8** is a bottom plan view thereof;

FIG. **9** is a reference view showing the visible inner structure through the light transmissible portion; and,

FIG. **10** is a reference view showing another visible inner structure through the light transmissible portion.

The light transmissible portion of the design is made of light transmissible material. The broken lines are directed to environment and form no part of the claimed design.

1 Claim, 6 Drawing Sheets

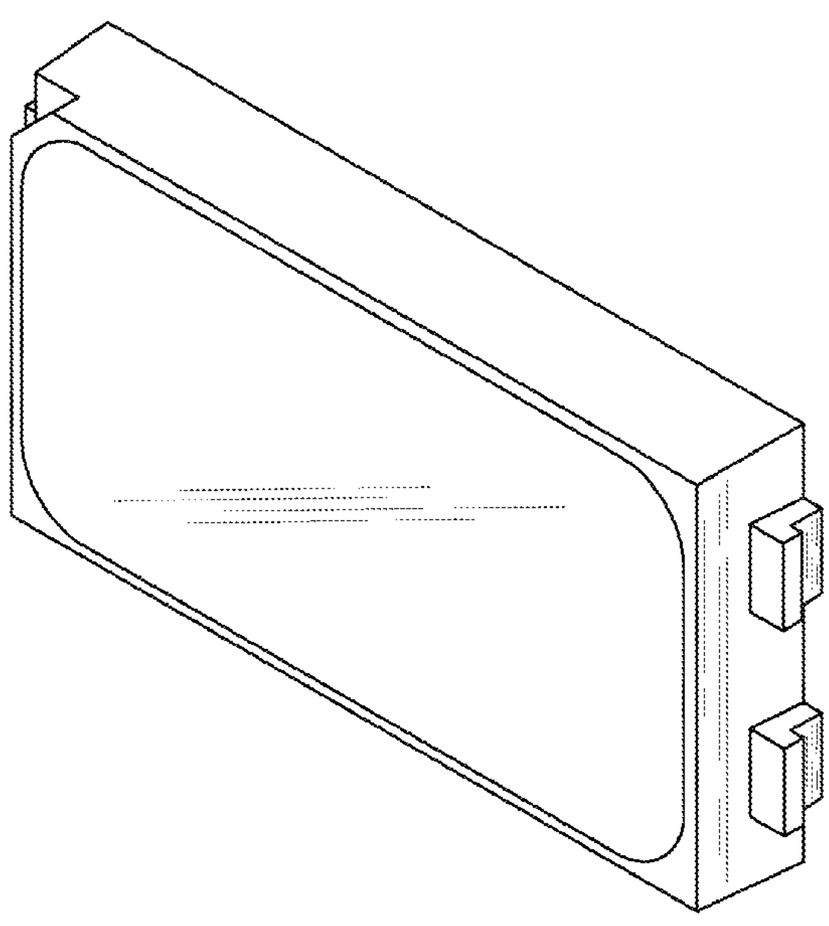

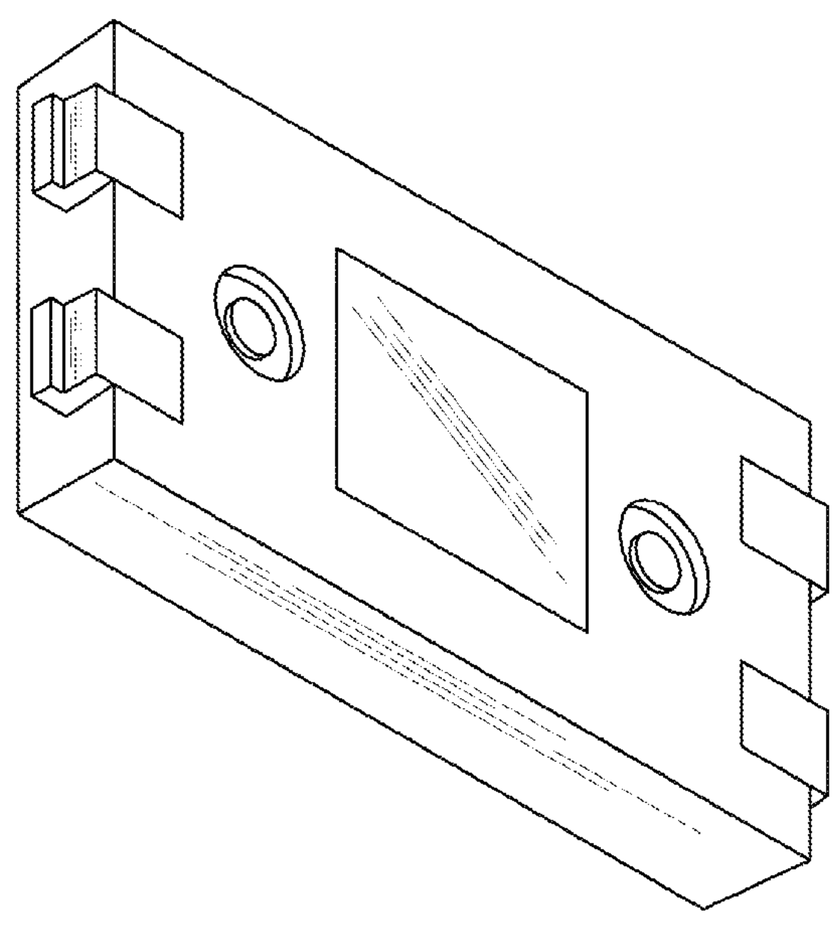

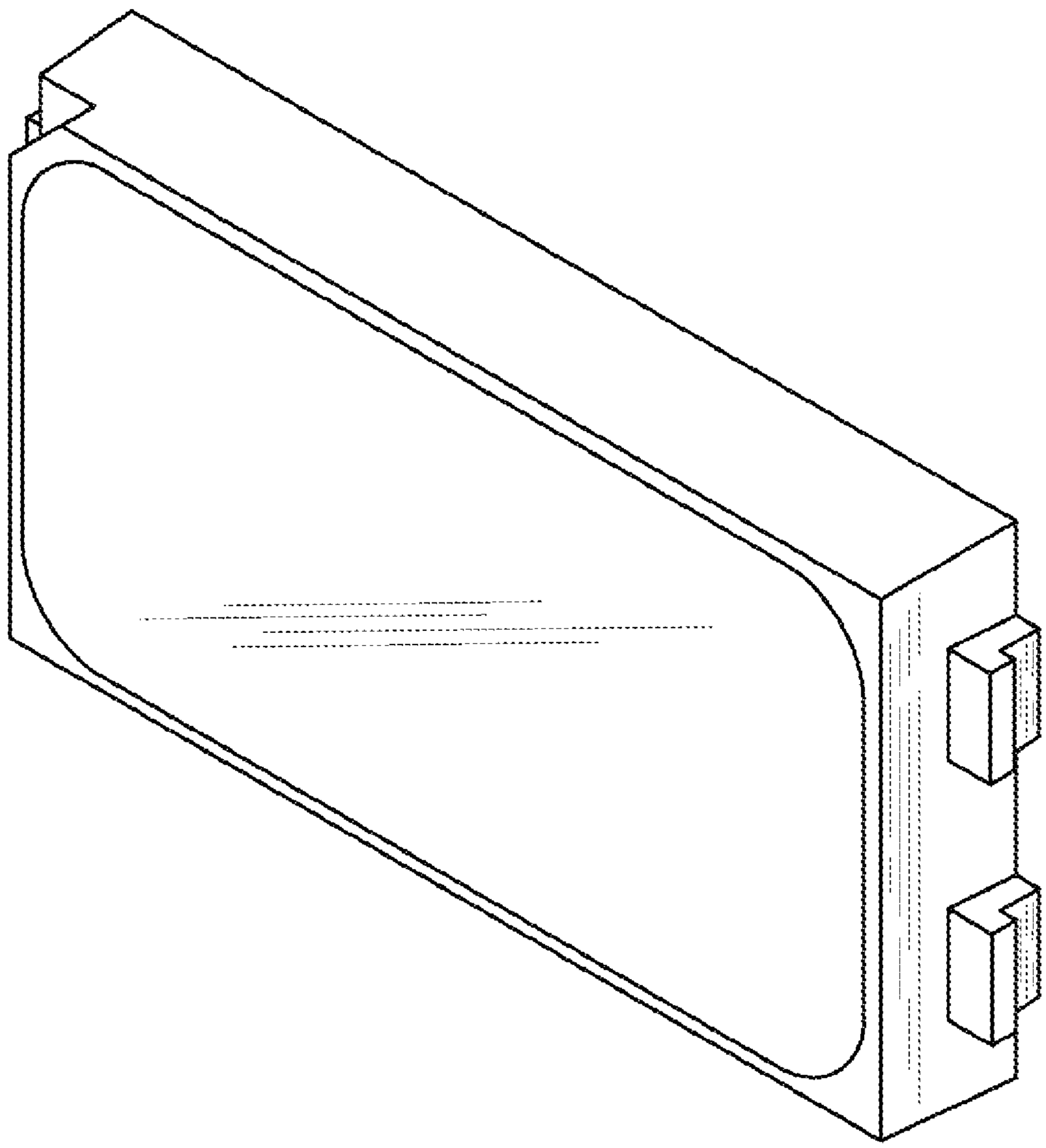

FIG. 1

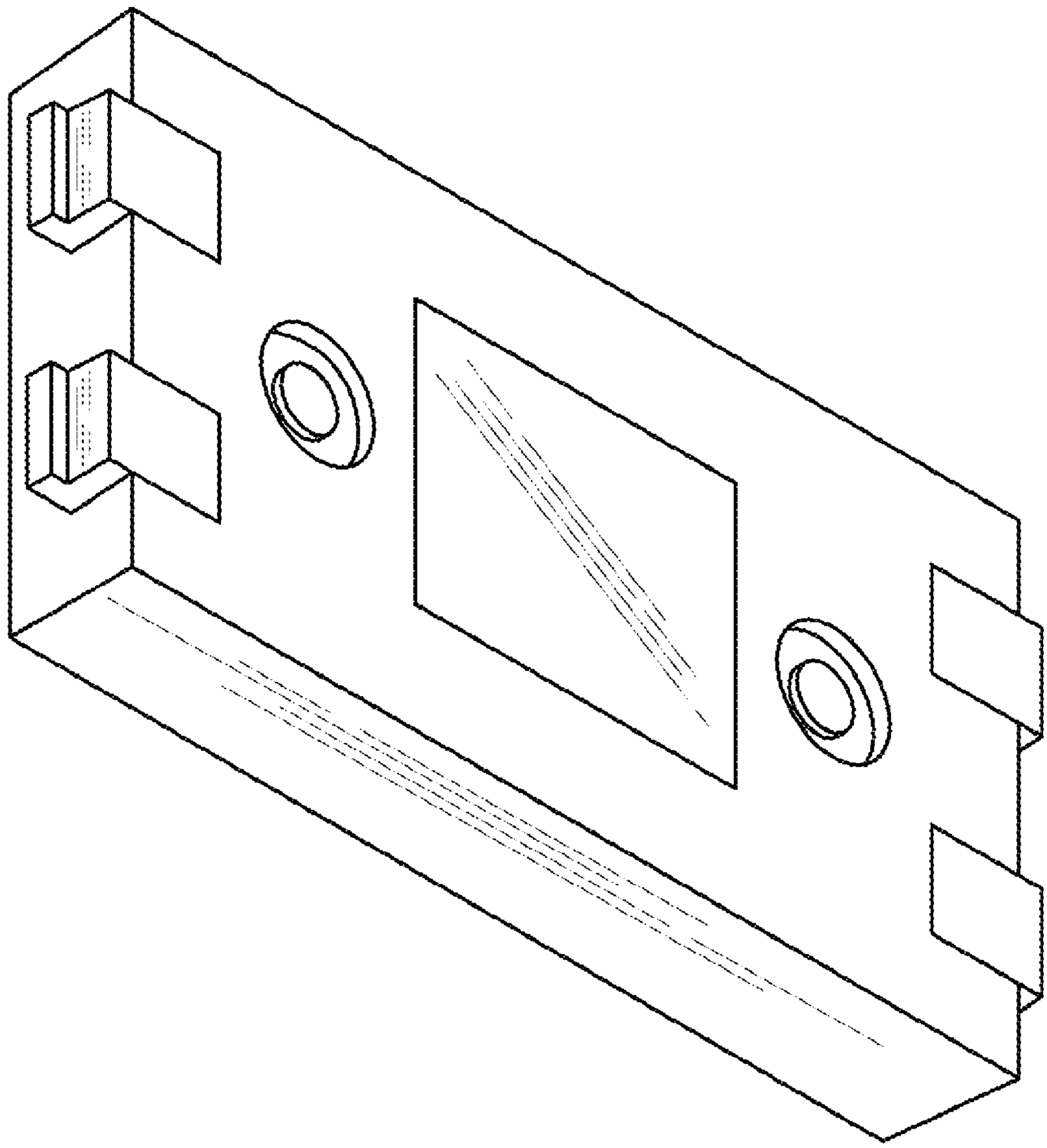

FIG.2

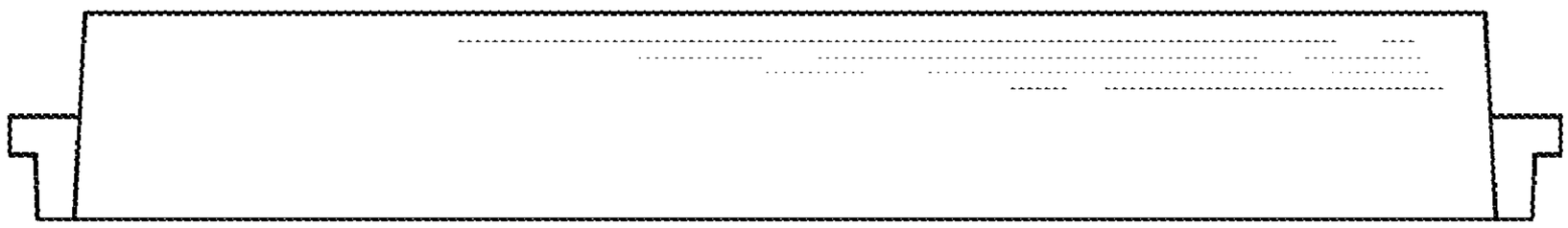

FIG.3

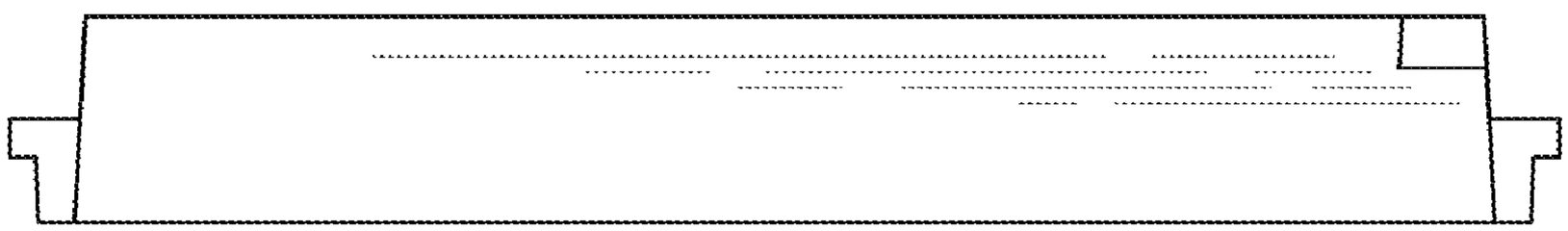

FIG.4

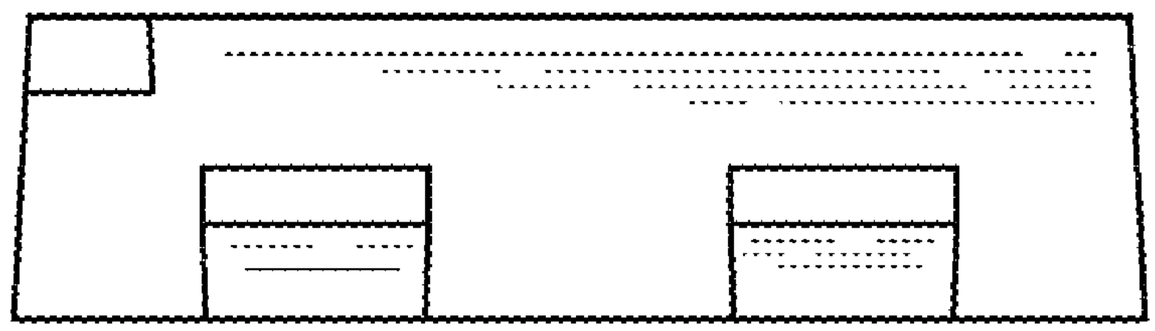

FIG.5

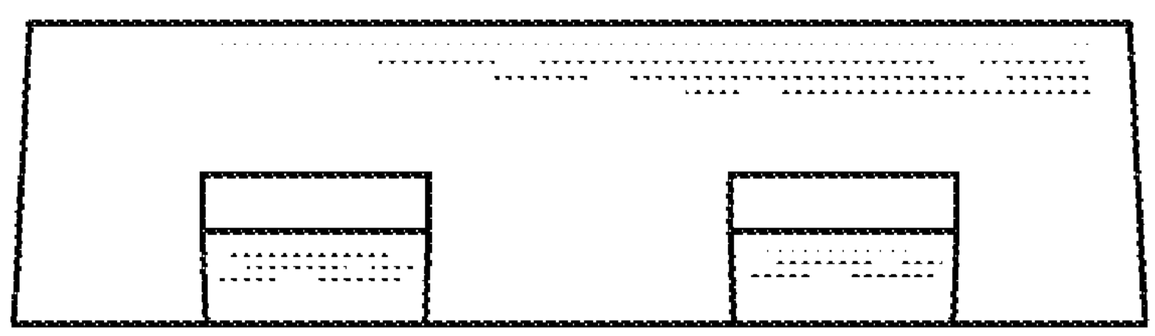

FIG.6

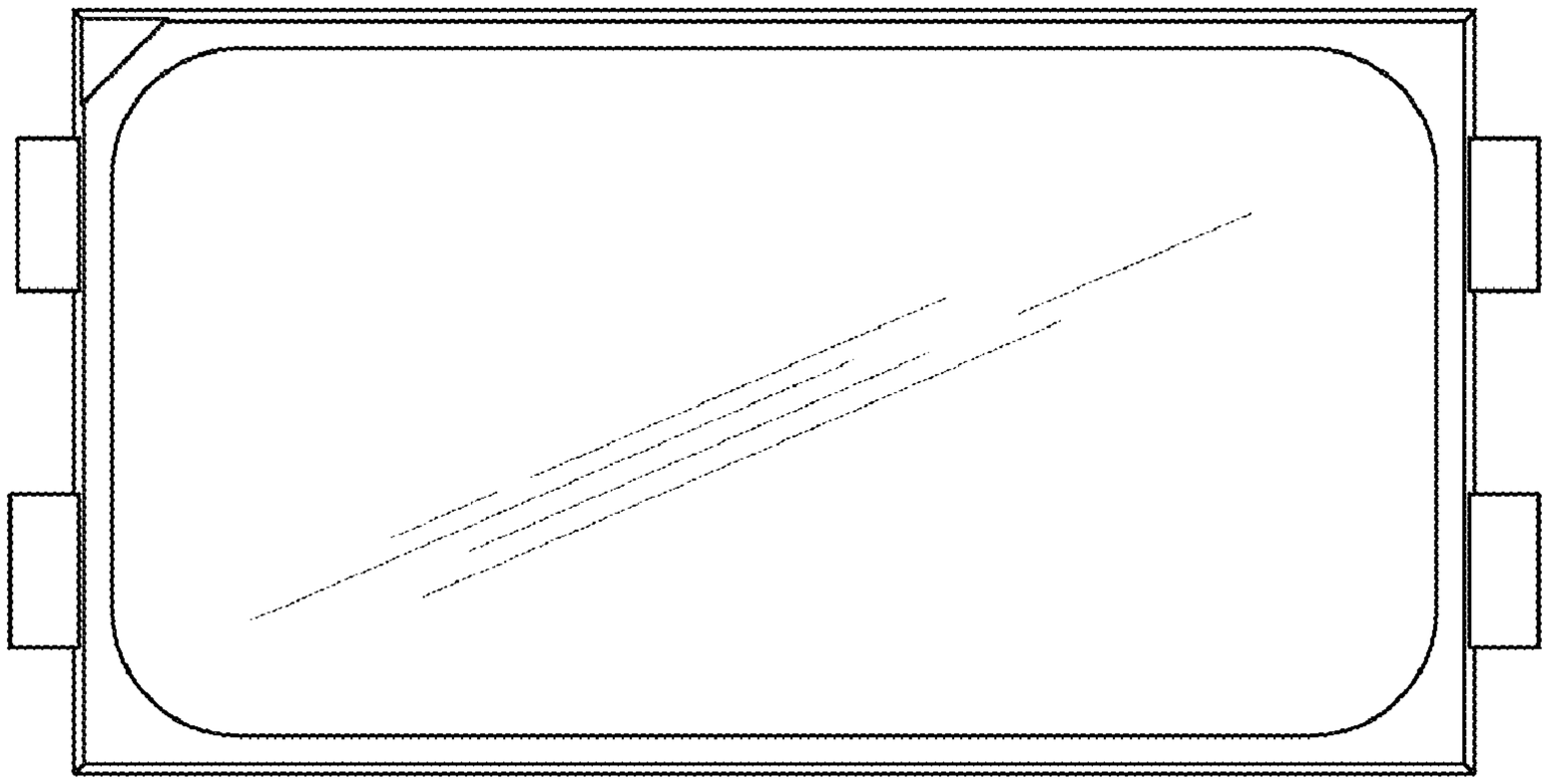

FIG.7

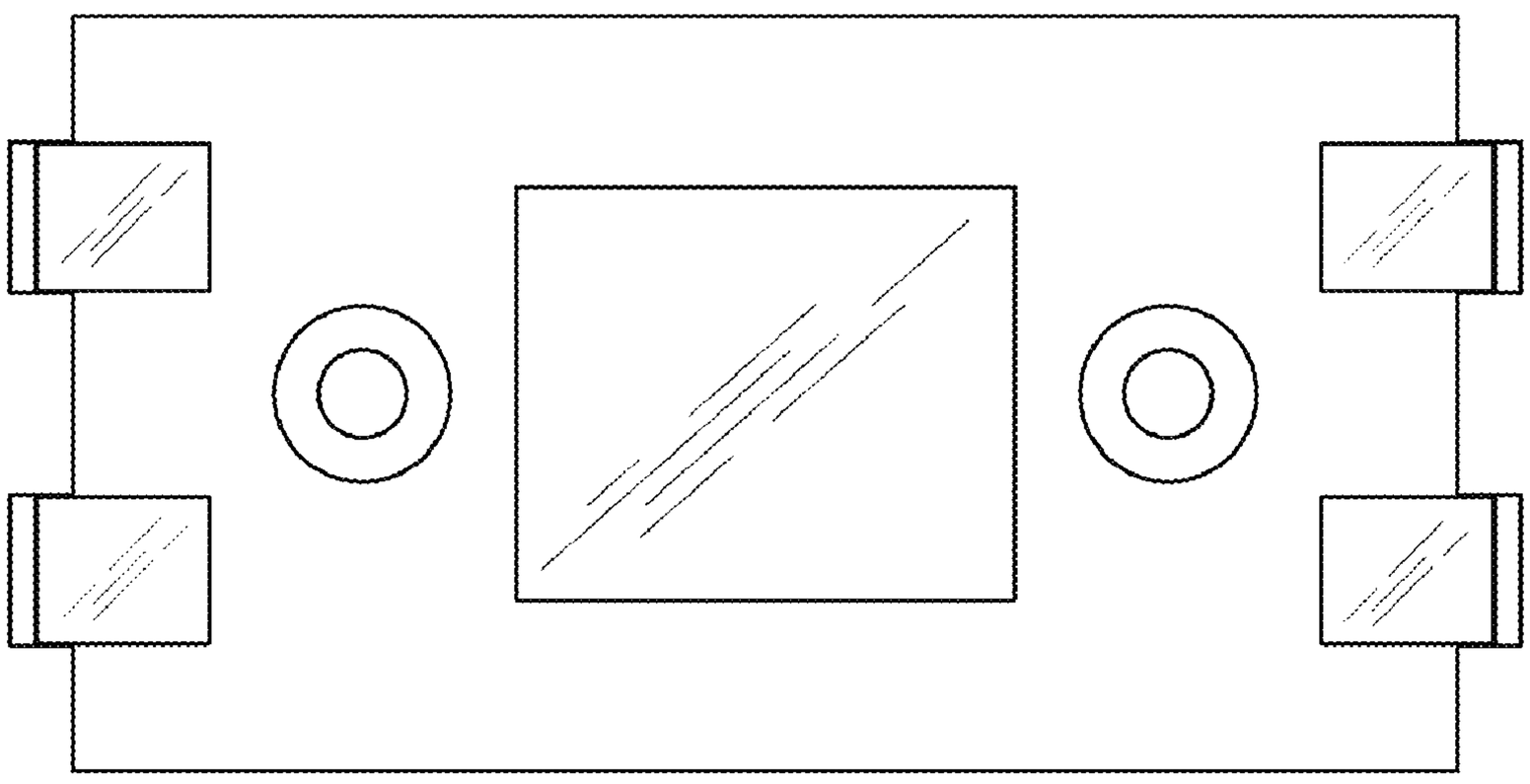

FIG.8

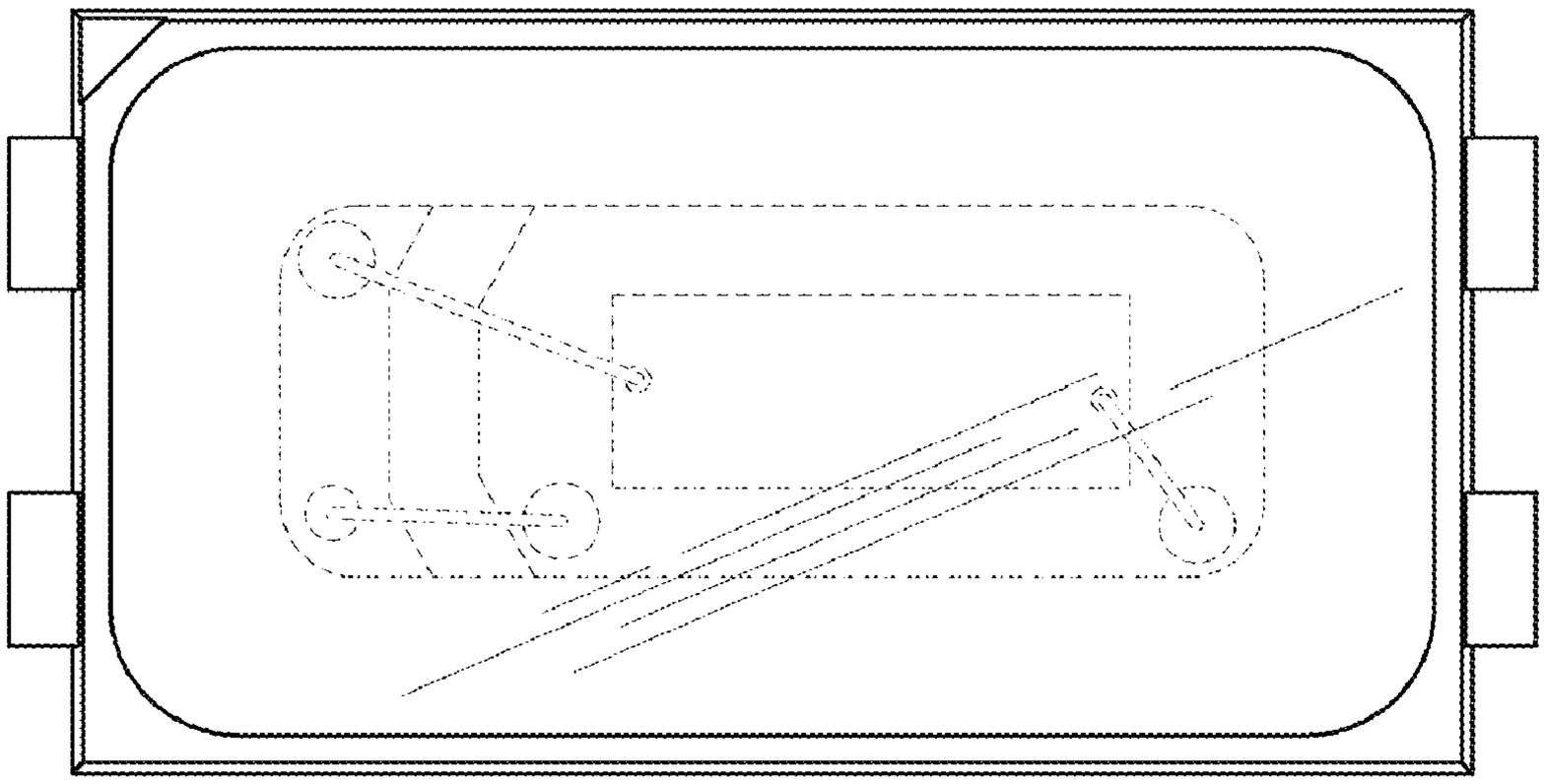

FIG.9

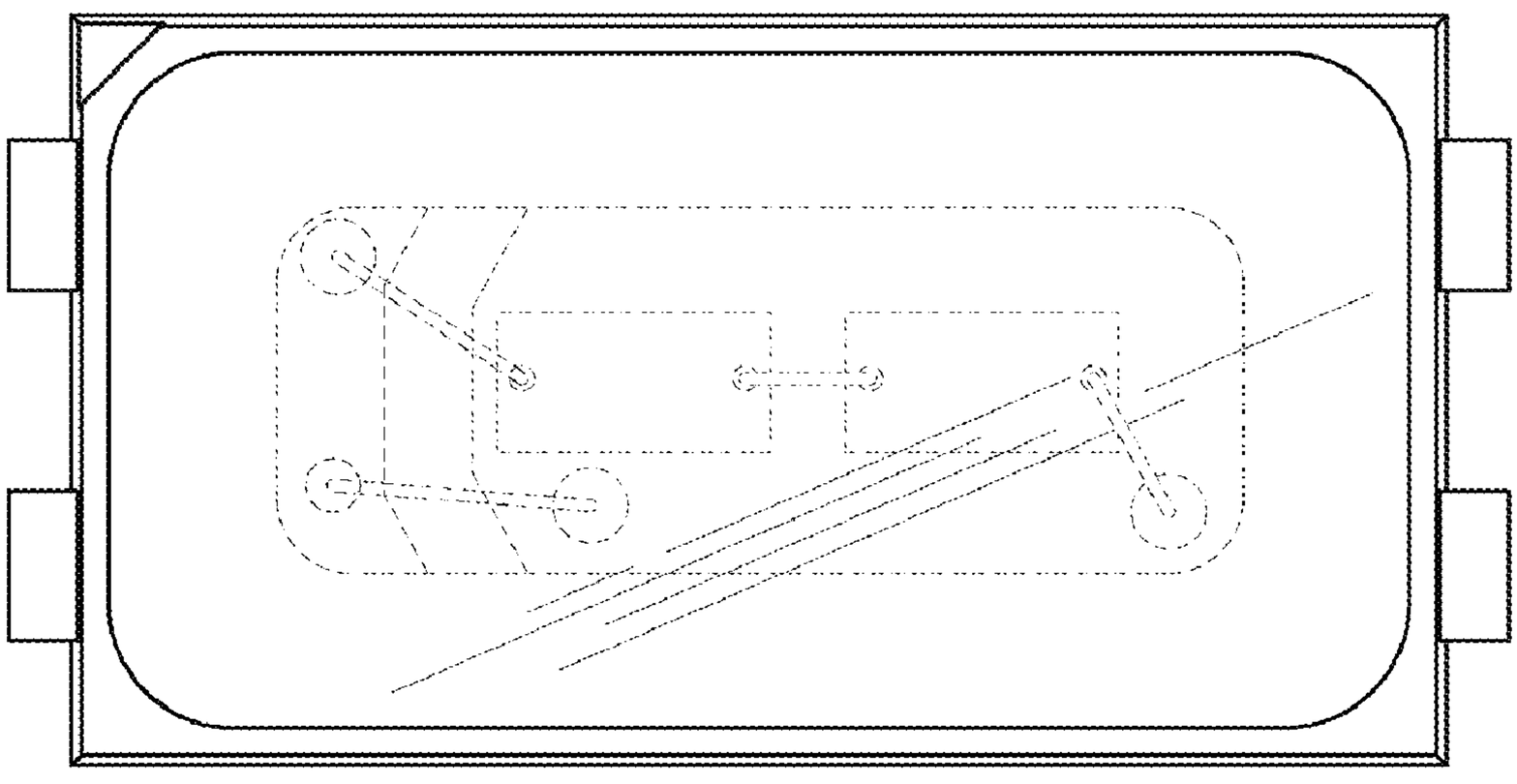

FIG.10