US00D627882S

(12) United States Design Patent

Slowey et al.

(10) Patent No.: US D627,882 S
(45) Date of Patent: ** Nov. 23, 2010

(54) **BIOLOGICAL SAMPLE COLLECTION WAND**

(76) Inventors: **Paul Slowey**, 15720 NE. 31st Ave., Vancouver, WA (US) 98686; **Jason Giddings**, 49085 NW. Strohmayer, Forest Grove, OR (US) 97116

(**) Term: **14 Years**

(21) Appl. No.: **29/354,603**

(22) Filed: **Jan. 26, 2010**

(51) **LOC (9) Cl.** **24-02**

(52) **U.S. Cl.** **D24/133**; D24/147

(58) **Field of Classification Search** D24/119, D24/133, 144, 146, 147; D28/57, 59; D8/90, D8/92, 94; 606/84, 85, 131, 161, 172
See application file for complete search history.

(56) **References Cited**

U.S. PATENT DOCUMENTS

1,032,897	A	*	7/1912	Hamilton	407/29.1
D64,894	S	*	6/1924	Fitzgerald	D24/142
D263,444	S	*	3/1982	Hayes	D8/90
D312,874	S	*	12/1990	Davison et al.	D24/146
D337,640	S	*	7/1993	Olson	D24/145
5,779,475	A	*	7/1998	Patel	433/141
D506,028	S	*	6/2005	Dickey	D28/7
D565,246	S	*	3/2008	Kotte	D28/57
D604,909	S	*	11/2009	Fierus et al.	D28/57
D612,048	S	*	3/2010	Baynham	D24/146
2006/0200153	A1	*	9/2006	Harp	606/85
2010/0137741	A1	*	6/2010	Slowey et al.	600/573

* cited by examiner

Primary Examiner—Bridget L Eland
(74) *Attorney, Agent, or Firm*—Rylander & Associates; Kurt M. Rylander

(57) **CLAIM**

The ornamental design for a biological sample collection wand, as shown and described.

DESCRIPTION

FIG. **1** shows a perspective view of our design.

FIG. **2** shows a front view of our design.

FIG. **3** shows a rear view of our design.

FIG. **4** shows a first side view of our design.

FIG. **5** shows a second side view of our design.

FIG. **6** shows a bottom view of our design.

FIG. **7** shows a top view of our design.

FIG. **8** shows a perspective view of our design in use; and,

FIG. **9** shows a perspective view of our design in use and with a portion disengaged.

1 Claim, 6 Drawing Sheets

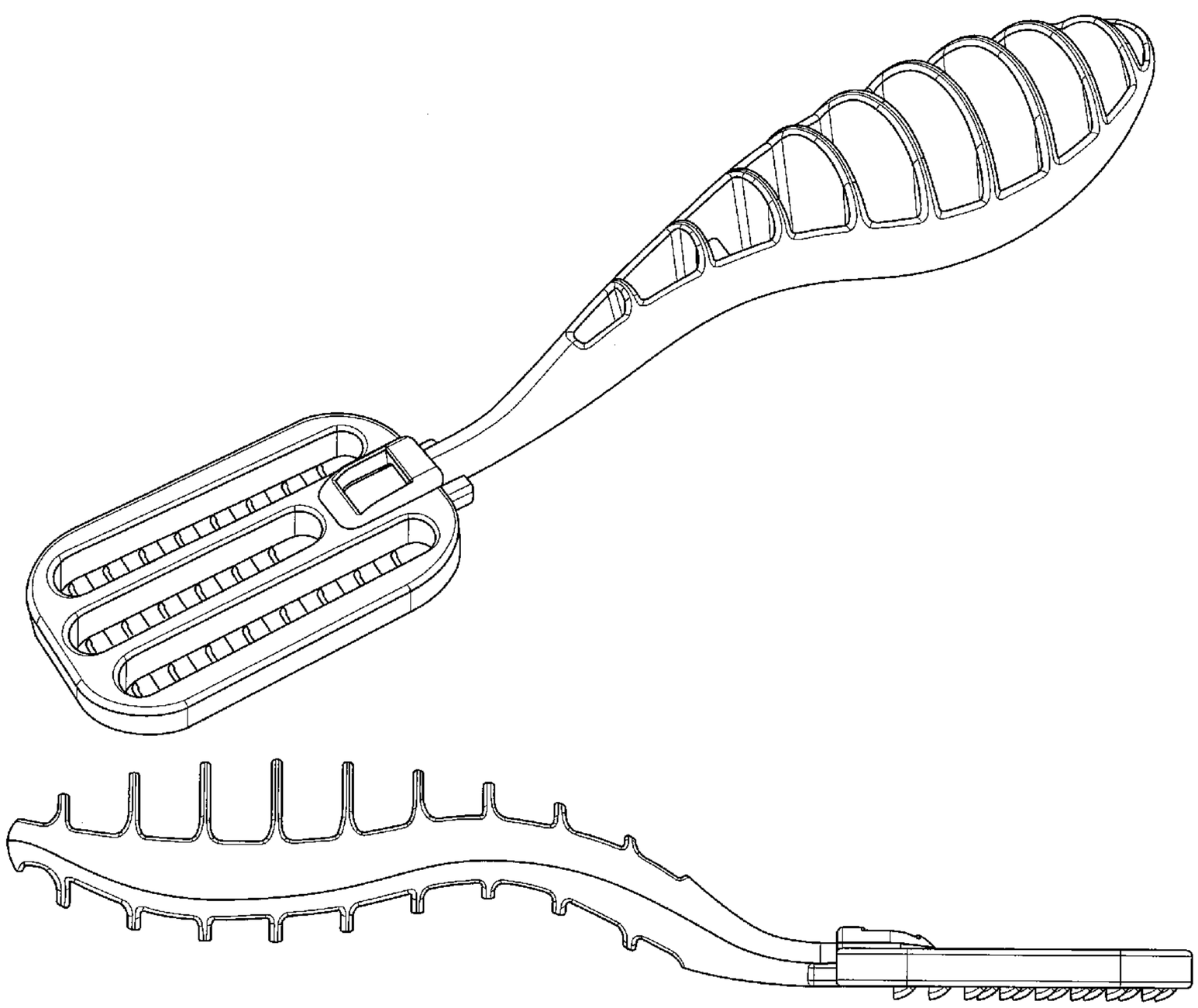

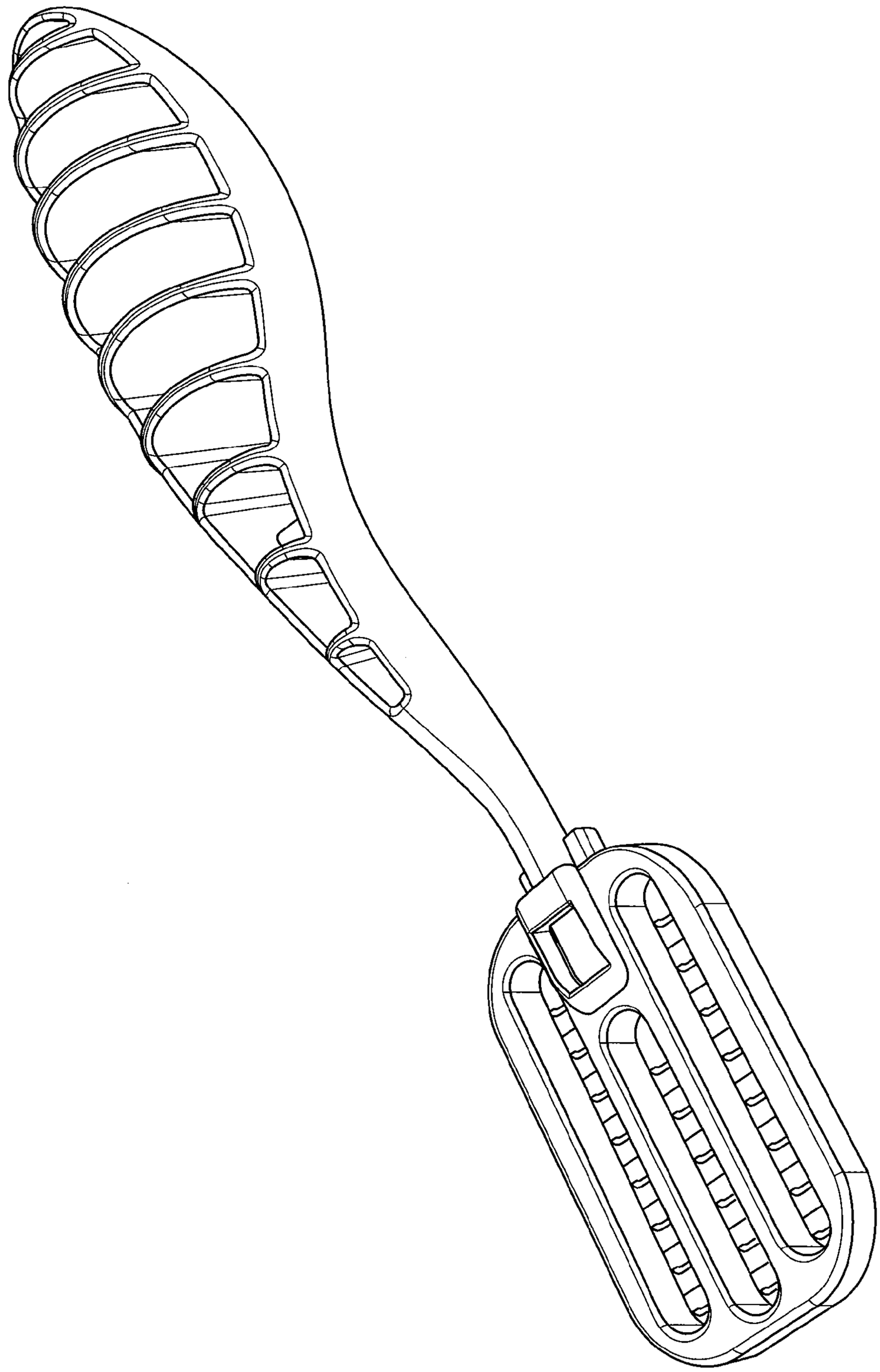

FIG. 1

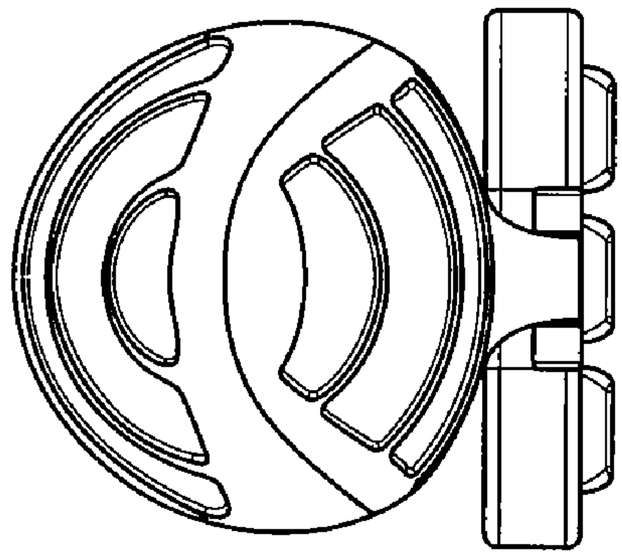

FIG. 3

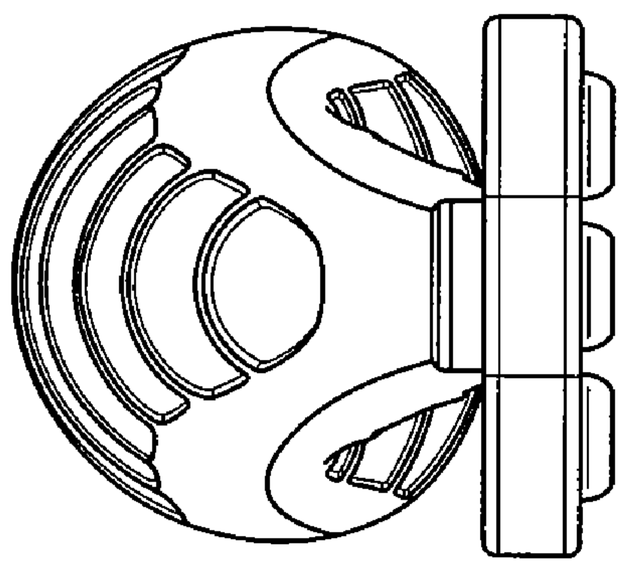

FIG. 2

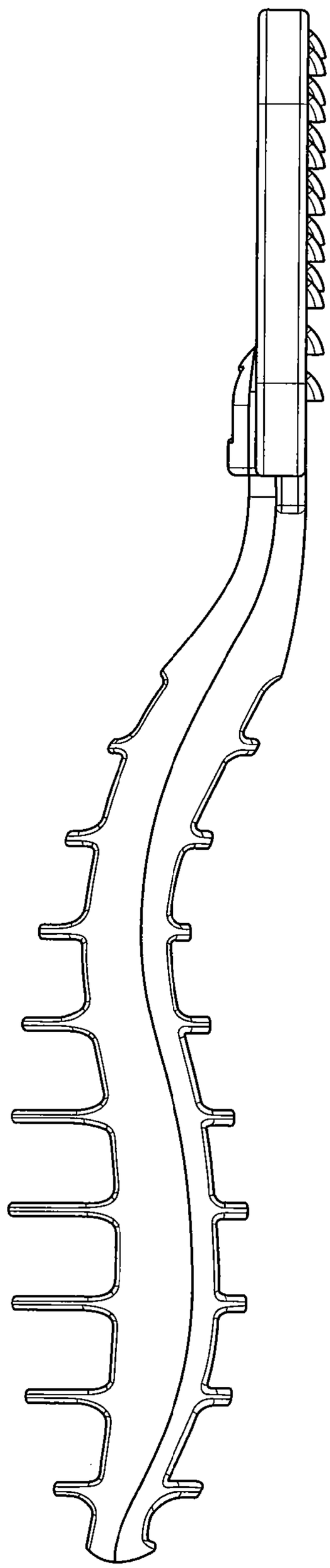

FIG. 4

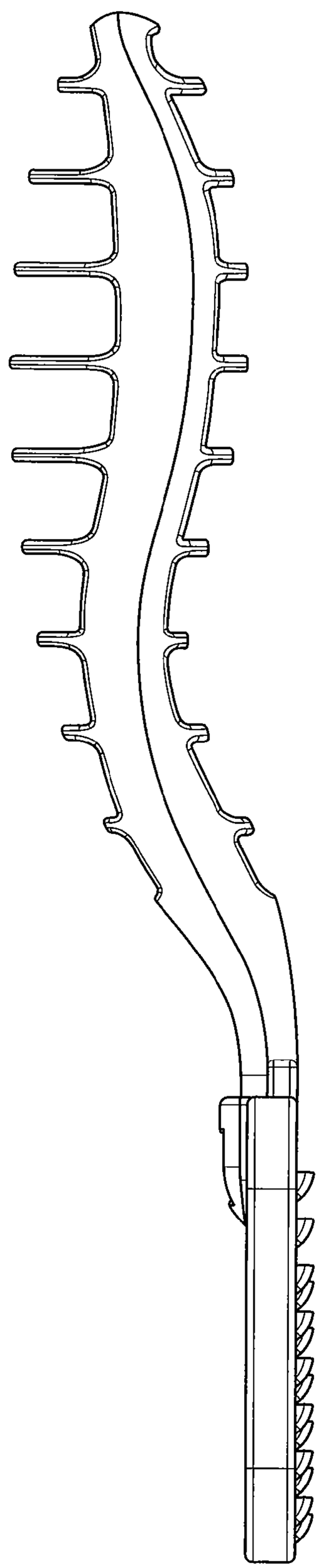

FIG. 5

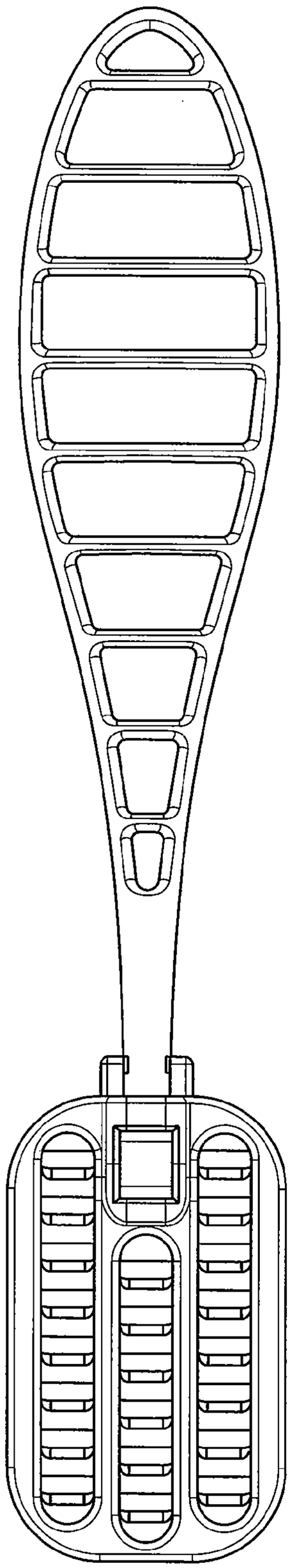

FIG. 6

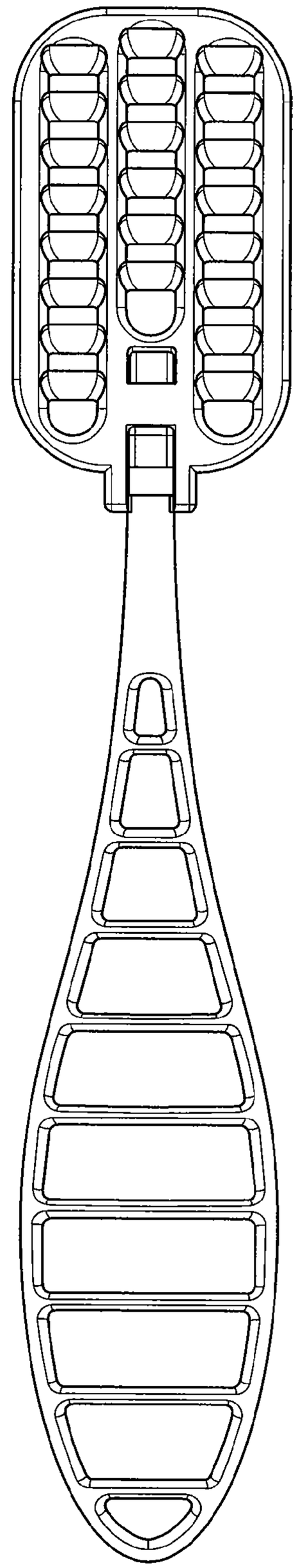

FIG. 7

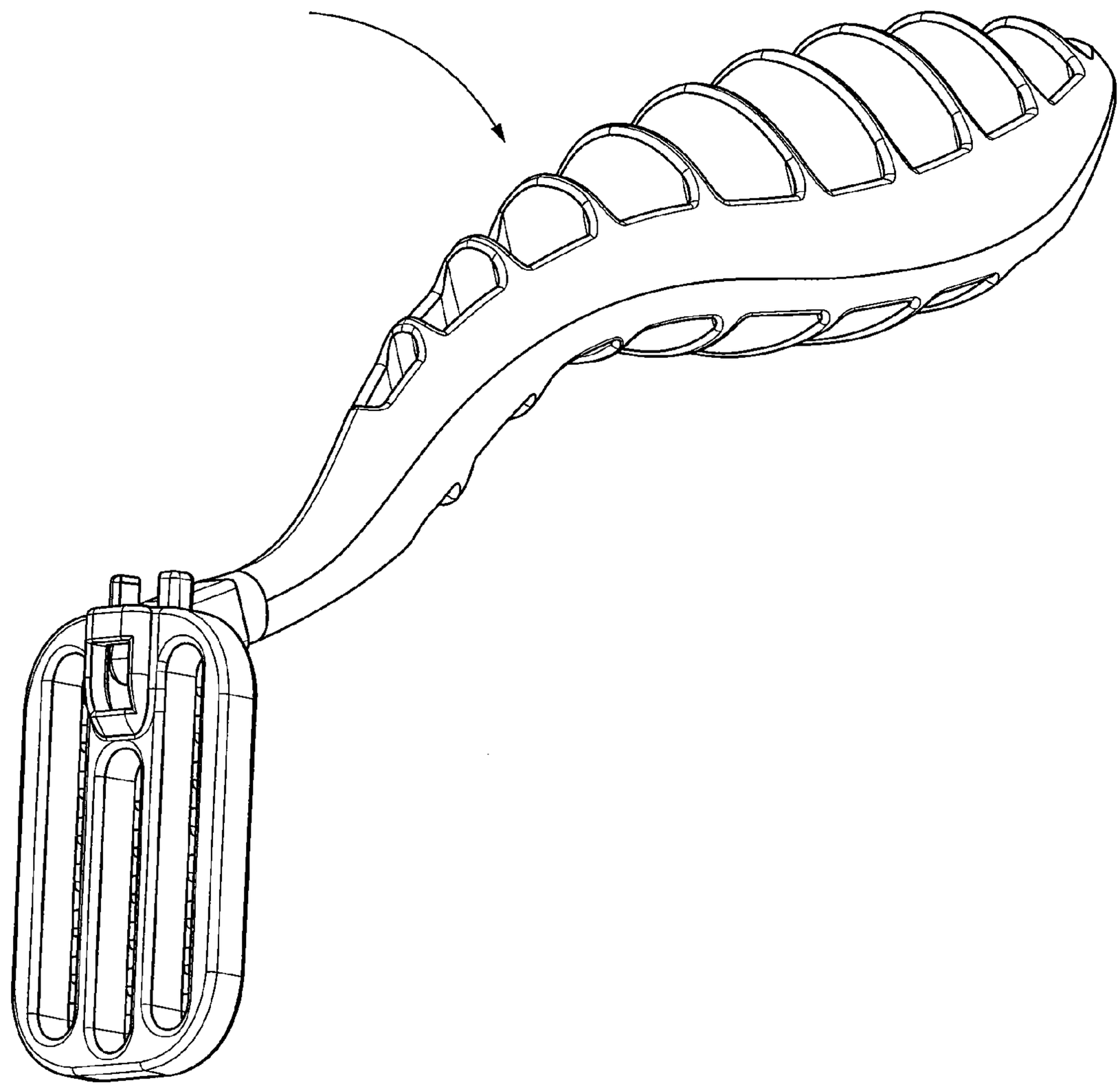

FIG. 8

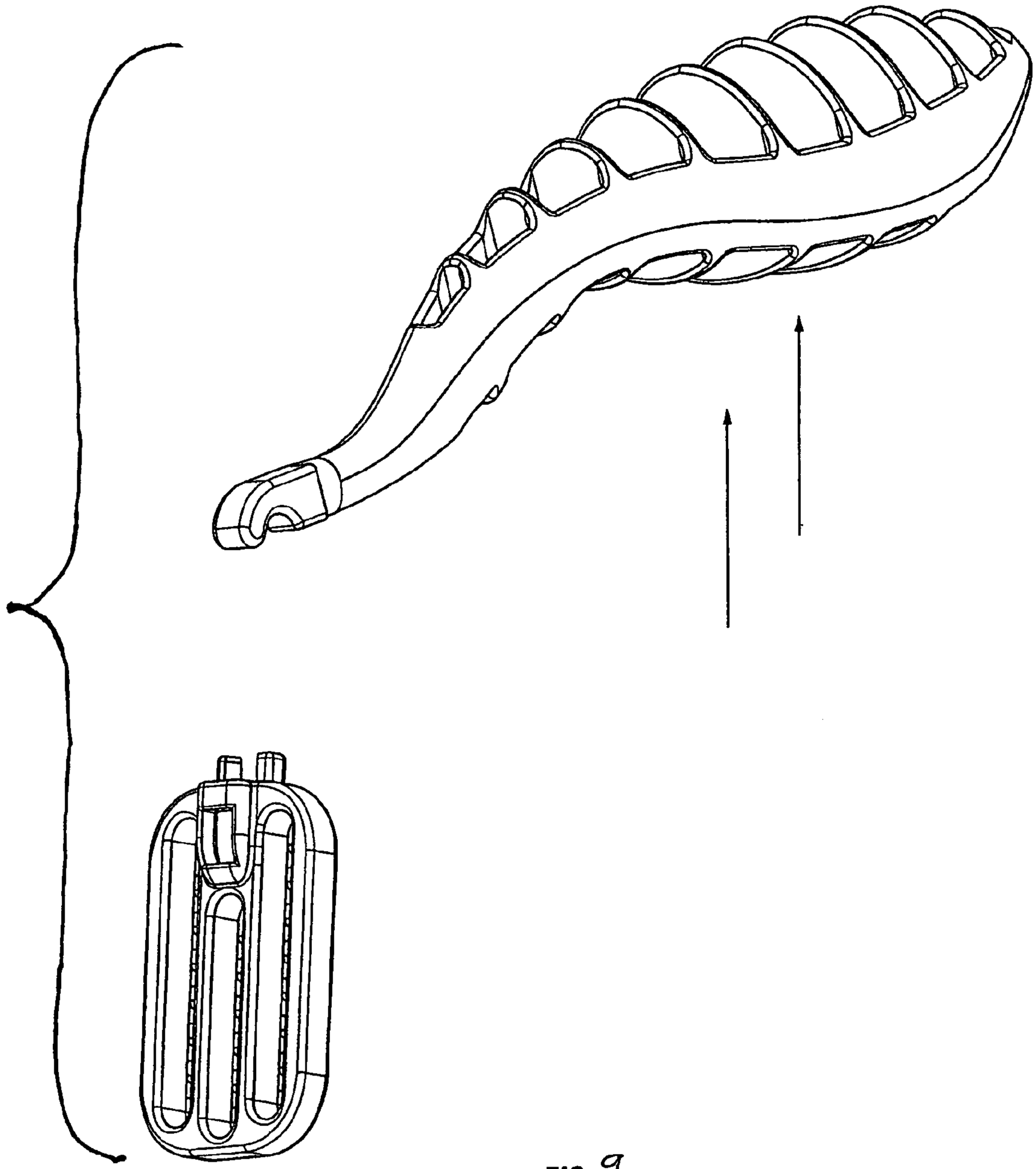

FIG. 9