US00D627210S

(12) United States Design Patent
Williams

(10) Patent No.: US D627,210 S
(45) Date of Patent: ** Nov. 16, 2010

(54) **SOLID LOOP LIFTER FOR CONCRETE STRUCTURES**

(75) Inventor: **Craig B. Williams**, Concord, GA (US)

(73) Assignee: **American Step Company, Inc.**, Concord, GA (US)

(**) Term: **14 Years**

(21) Appl. No.: **29/359,825**

(22) Filed: **Apr. 15, 2010**

Related U.S. Application Data

(63) Continuation of application No. 29/342,091, filed on Aug. 18, 2009, now Pat. No. Des. 615,849.

(51) **LOC (9) Cl.** **08-05**
(52) **U.S. Cl.** **D8/370**
(58) **Field of Classification Search** D8/354, D8/370; 52/712, 719; 248/302–303
See application file for complete search history.

(56) **References Cited**

U.S. PATENT DOCUMENTS

1,580,847 A * 4/1926 Moineau 248/302
3,578,226 A * 5/1971 Good 294/137
D379,920 S * 6/1997 Bozzo D8/368
D398,836 S * 9/1998 Kalat D8/370
D515,827 S * 2/2006 Steendyk D6/317

* cited by examiner

Primary Examiner—Holly H Baynham
(74) *Attorney, Agent, or Firm*—Hovey Williams LLP

(57) **CLAIM**

The ornamental design for a solid loop lifter for concrete structures, as shown and described.

DESCRIPTION

FIG. **1** is a front isometric view of a solid loop lifter for concrete structures embodying my design;

FIG. **2** is a front elevational view thereof;

FIG. **3** is a rear elevational view thereof;

FIG. **4** is a left side elevational view thereof;

FIG. **5** is a right side elevational view thereof;

FIG. **6** is a top plan view thereof; and,

FIG. **7** is a bottom plan view thereof.

The broken lines immediately adjacent the shaded areas represent the bounds of the claim and all other broken lines are for illustrative purposes only. None of the broken lines form part of the claimed design.

1 Claim, 3 Drawing Sheets

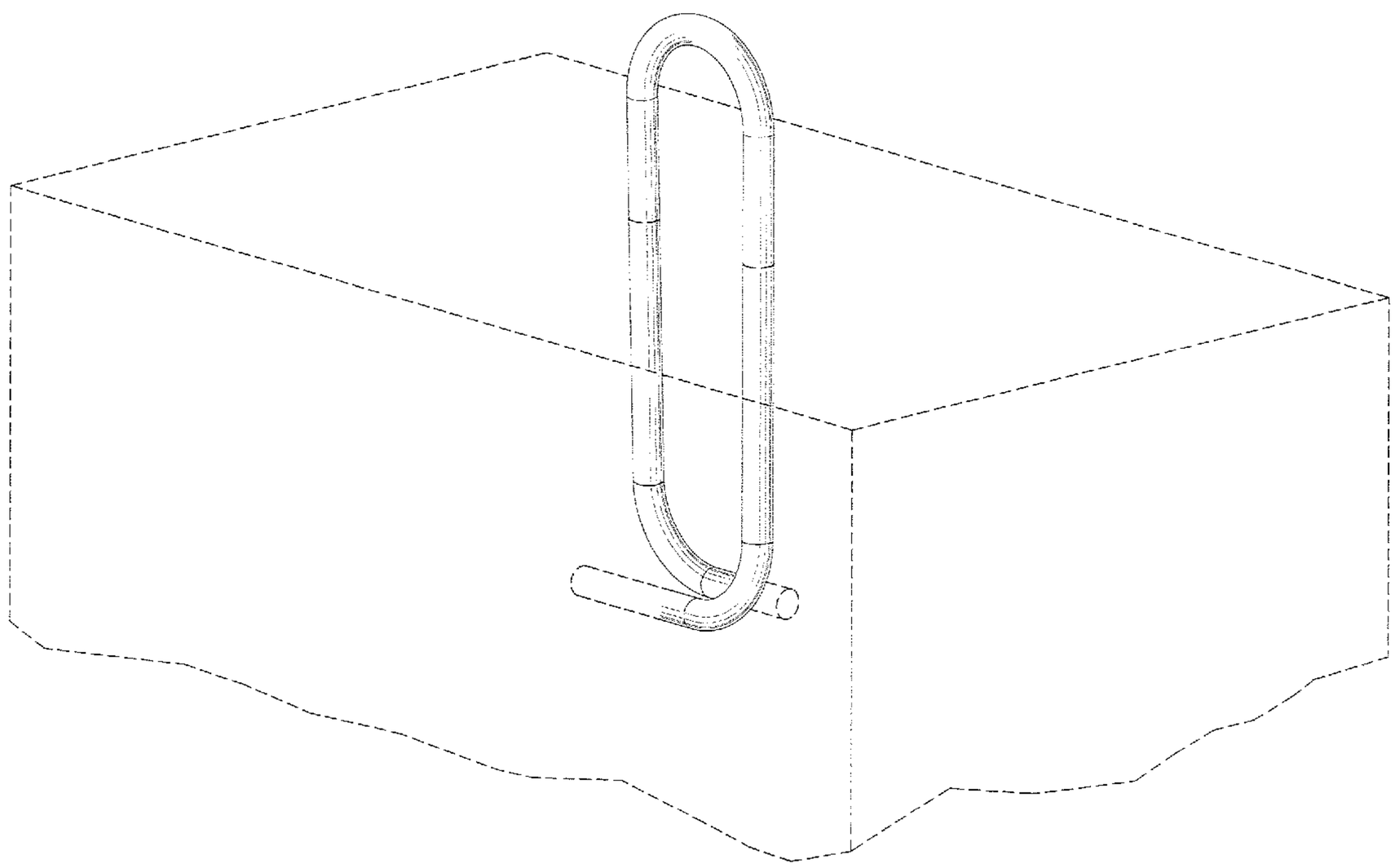

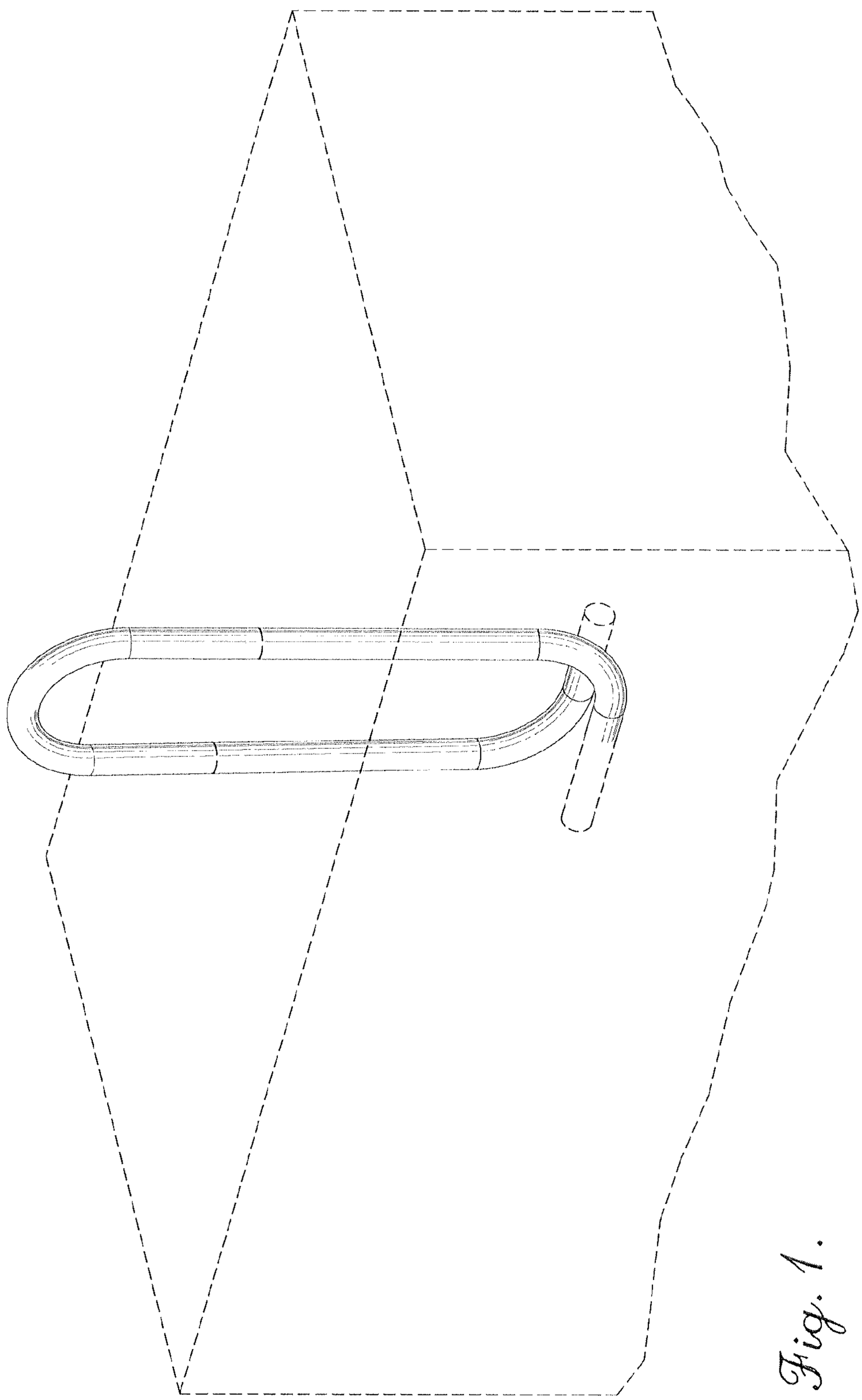

Fig. 1.

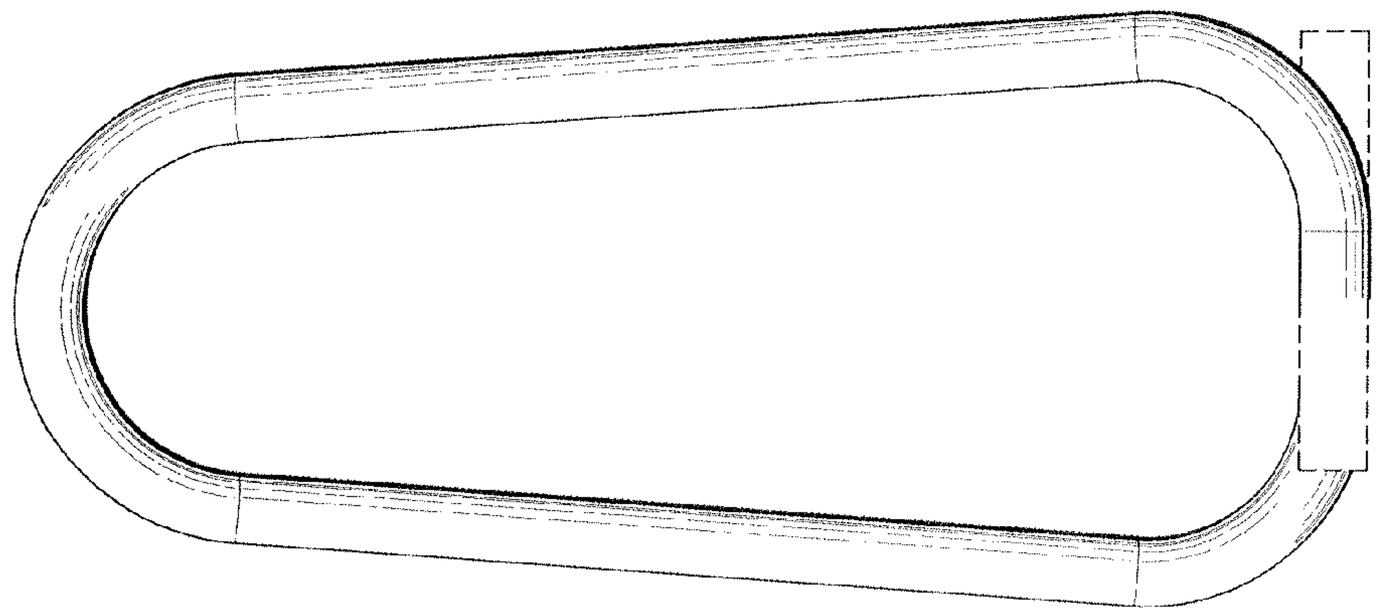

Fig. 3.

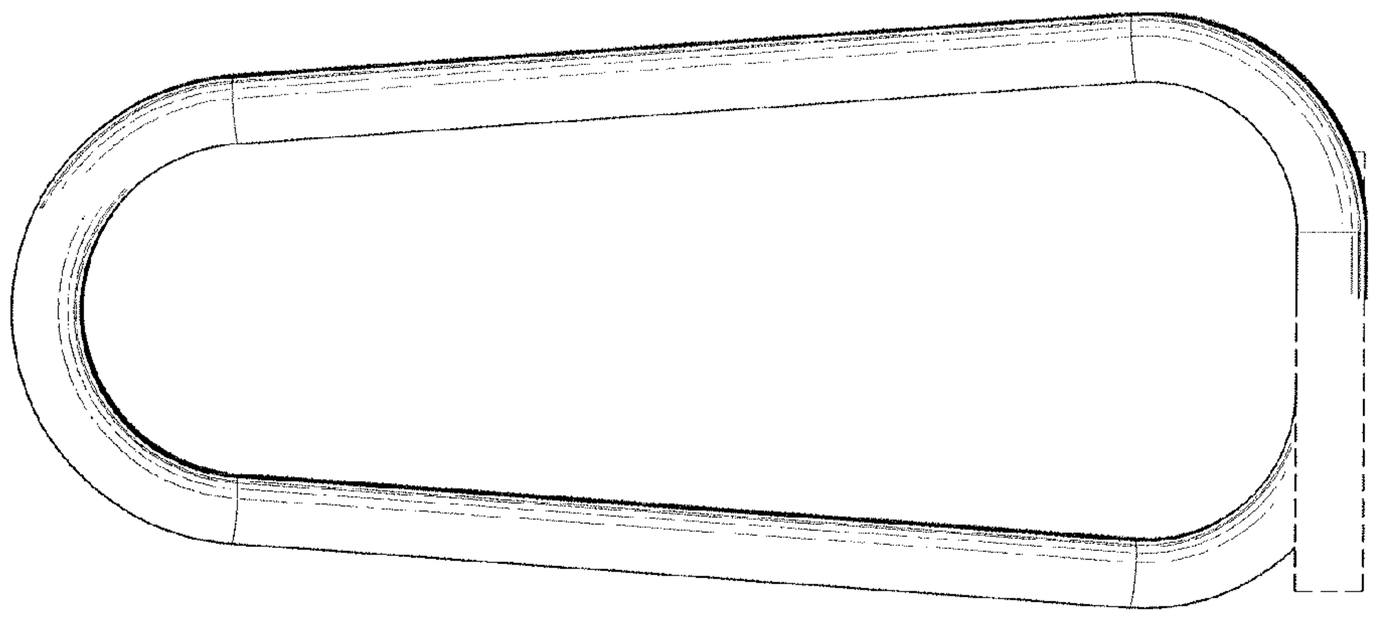

Fig. 2.

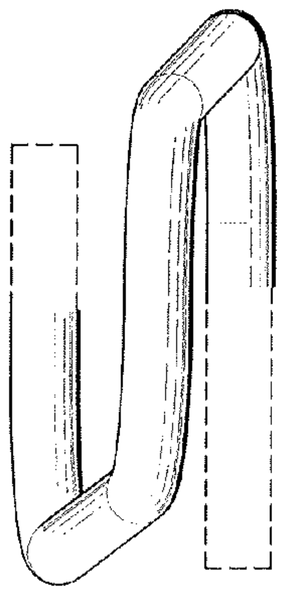

Fig. 6.

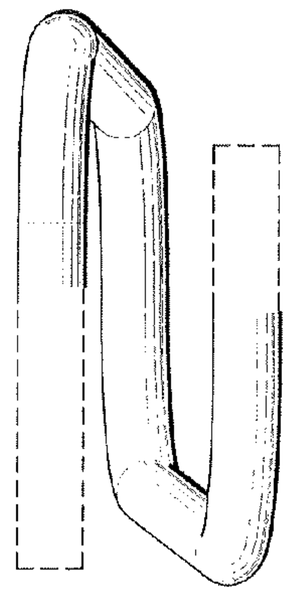

Fig. 7.

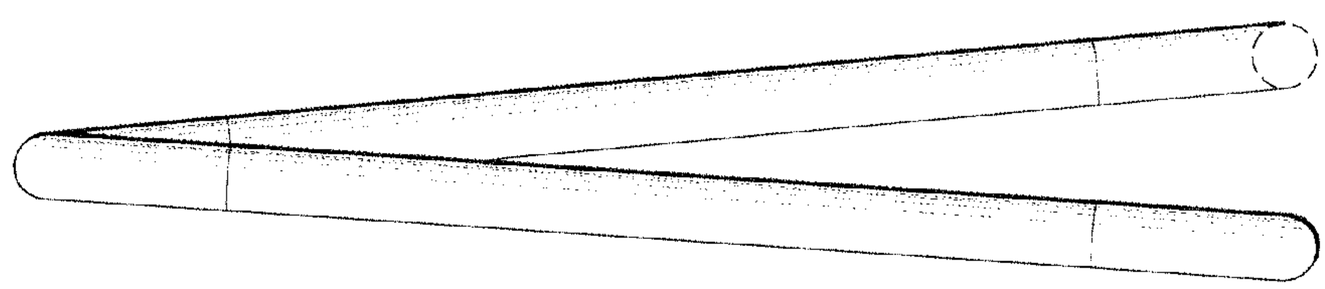

Fig. 5.

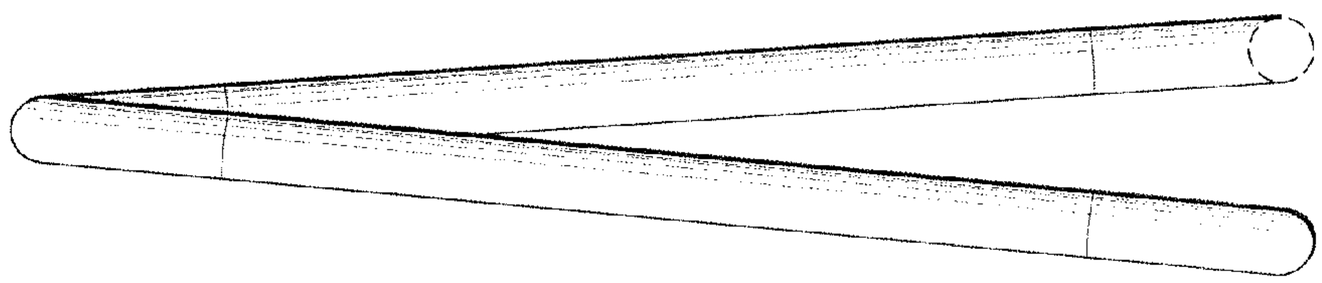

Fig. 4.