US00D627172S

(12) United States Design Patent

LaRoche et al.

(10) Patent No.: US D627,172 S
(45) Date of Patent: ** Nov. 16, 2010

(54) **CHILD'S CHAIR**

(75) Inventors: **John LaRoche**, Gardner, MA (US); **Peter Jerome**, Tiverton, RI (US)

(73) Assignee: **Jeffco Fibres, Inc.**, Webster, MA (US)

(**) Term: **14 Years**

(21) Appl. No.: **29/363,409**

(22) Filed: **Jun. 9, 2010**

(51) **LOC (9) Cl.** **06-01**
(52) **U.S. Cl.** **D6/333**; D6/334
(58) **Field of Classification Search** D6/333–336, D6/339, 356, 364–366, 379–381, 491, 500–502; D21/419; 297/250.1, 183.1, 183.2, 445.1, 297/16.1, 452.1, 461, 232, 233, 248, 446.1, 297/448.1; 5/93.1, 99.1, 94, 101, 98.1, 12.1
See application file for complete search history.

(56) **References Cited**

U.S. PATENT DOCUMENTS

D265,531	S	*	7/1982	Brukoff	D6/364
D283,855	S	*	5/1986	Kujawski	D6/333
D369,493	S	*	5/1996	LaRoche	D6/334
D407,568	S	*	4/1999	Tseng	D6/334
D426,714	S	*	6/2000	Linder	D6/334
D446,030	S	*	8/2001	Linder	D6/334
D446,949	S	*	8/2001	Linder	D6/335
D486,967	S	*	2/2004	Bourget	D6/359
D496,166	S	*	9/2004	Namikawa	D6/333
D529,302	S	*	10/2006	Loehr	D6/333
D535,484	S	*	1/2007	May	D6/336
D620,263	S	*	7/2010	Van Halder	D6/334

* cited by examiner

Primary Examiner—Caron Veynar
Assistant Examiner—Abraham Bahta
(74) *Attorney, Agent, or Firm*—Mark P. White

(57) **CLAIM**

The ornamental design for a child's chair, as shown and described.

DESCRIPTION

FIG. **1** is a perspective view of the child's chair showing our new design;

FIG. **2** is a front perspective view thereof;

FIG. **3** is a side elevation view thereof;

FIG. **4** is a top plan view thereof; and,

FIG. **5** is a rear elevation view thereof wherein the broken lines represent stitching.

The broken line showing of a child in FIG. **2** and portions of the sofa shown in broken lines in FIG. **5** are included for the purpose of illustrating environmental structure and forms no part of the claimed design.

1 Claim, 5 Drawing Sheets

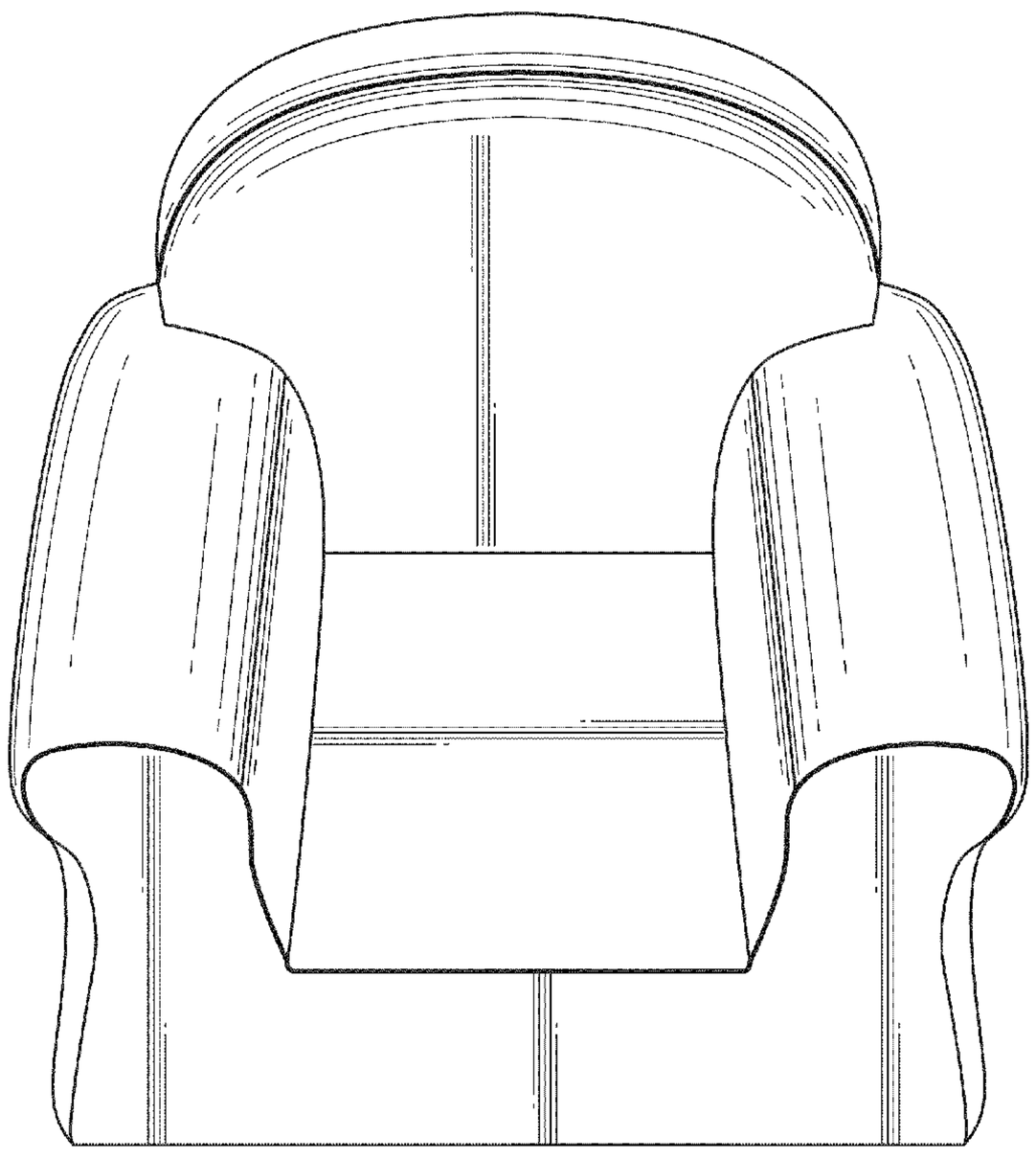

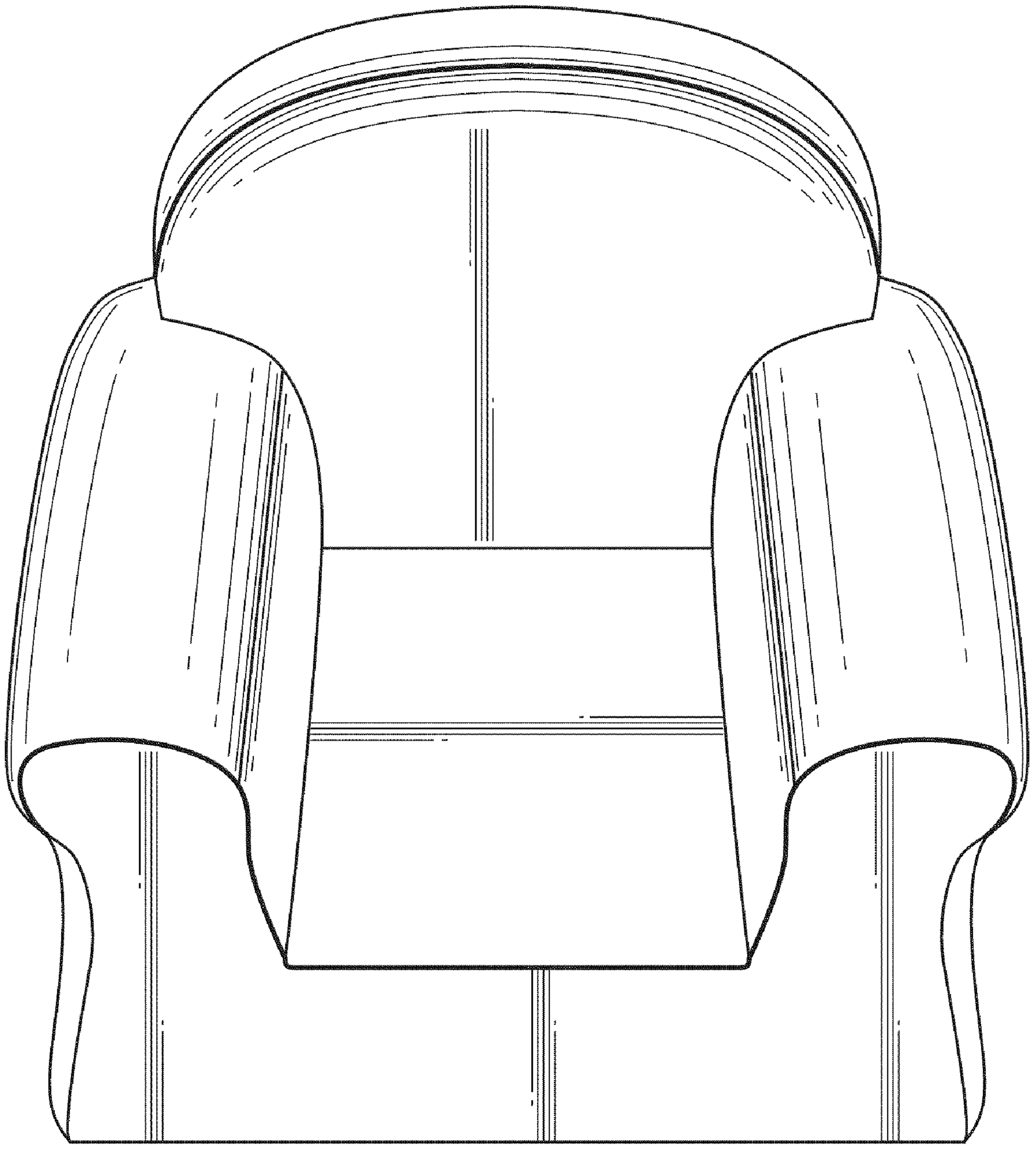

FIG. 1

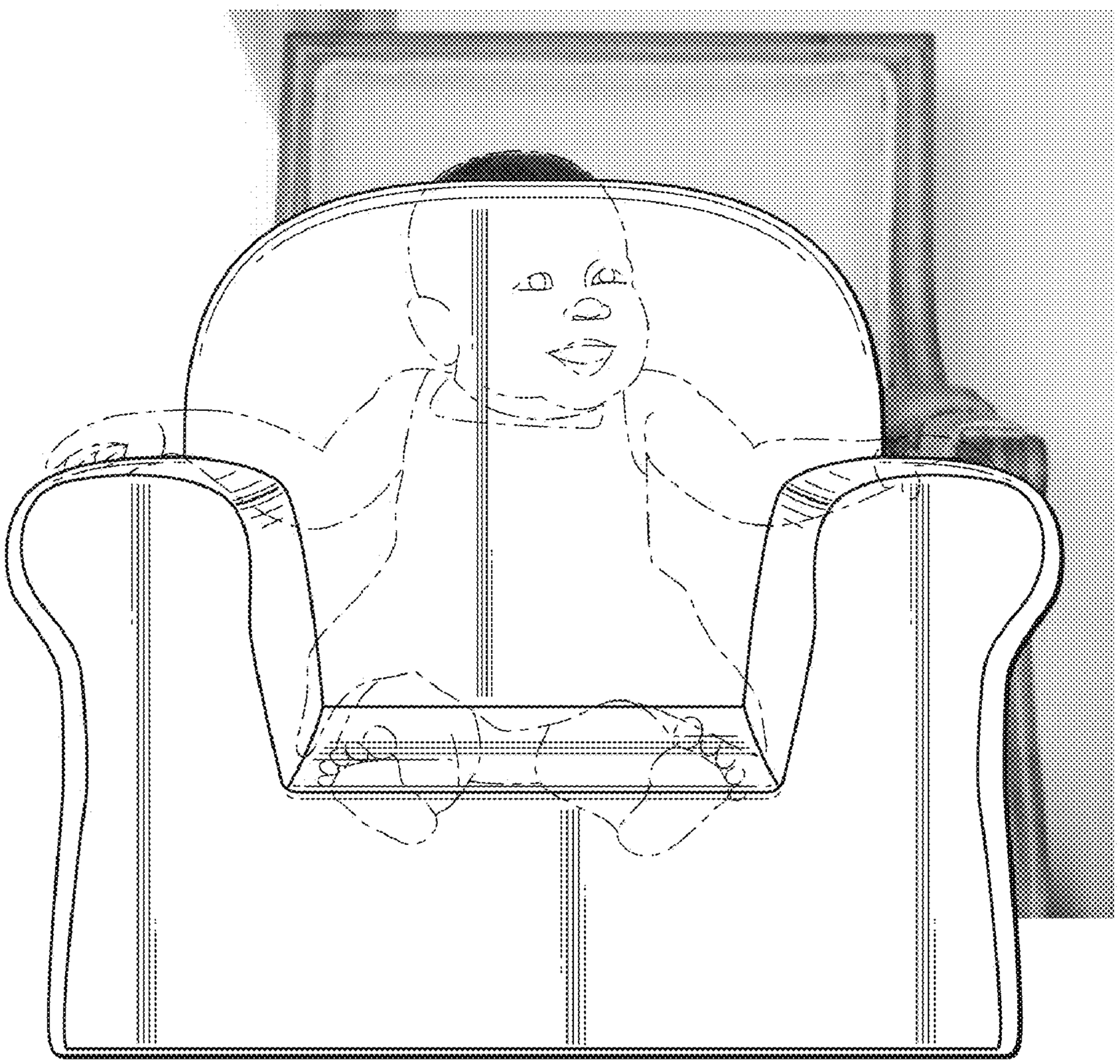

FIG. 2

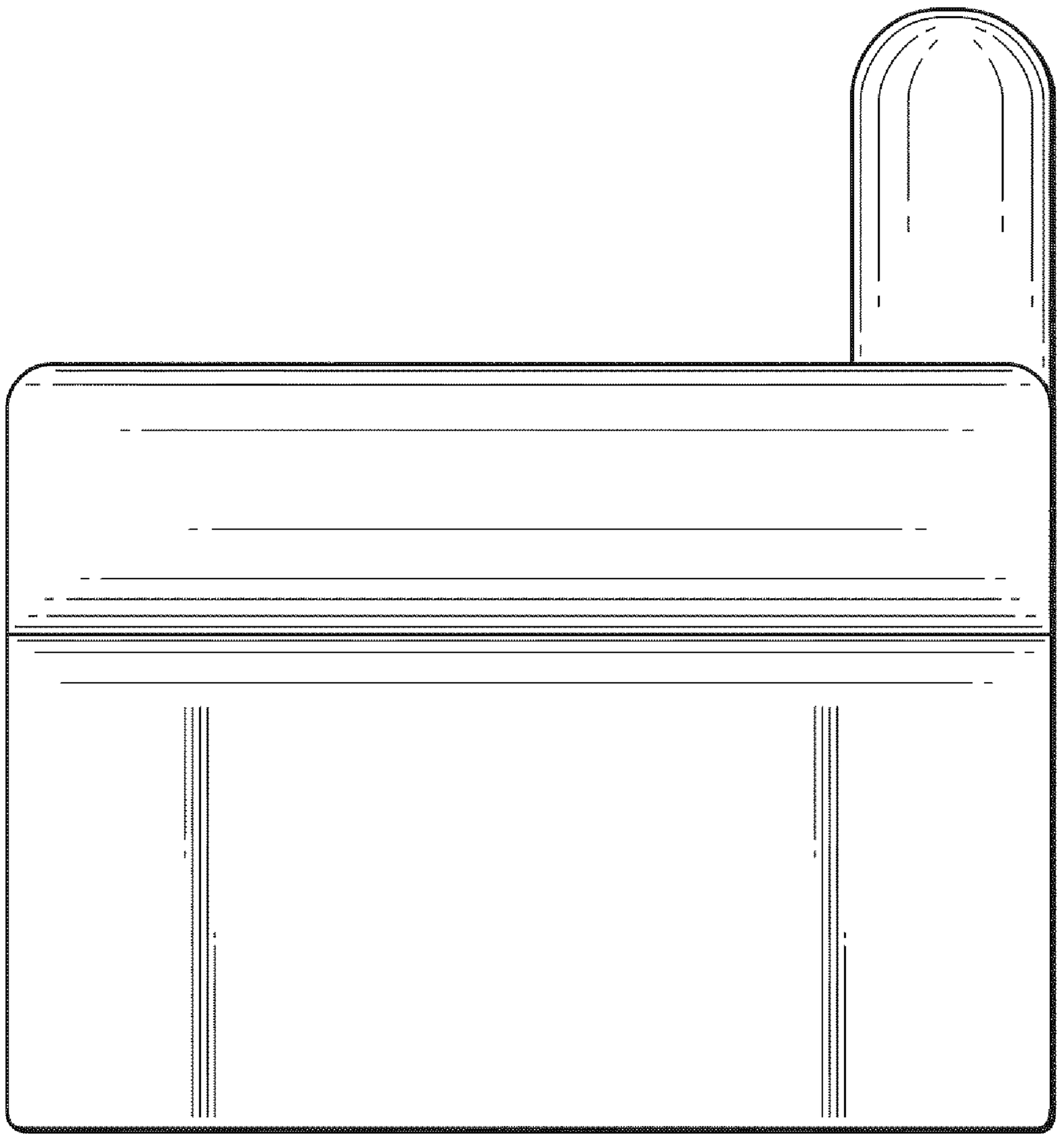

FIG. 3

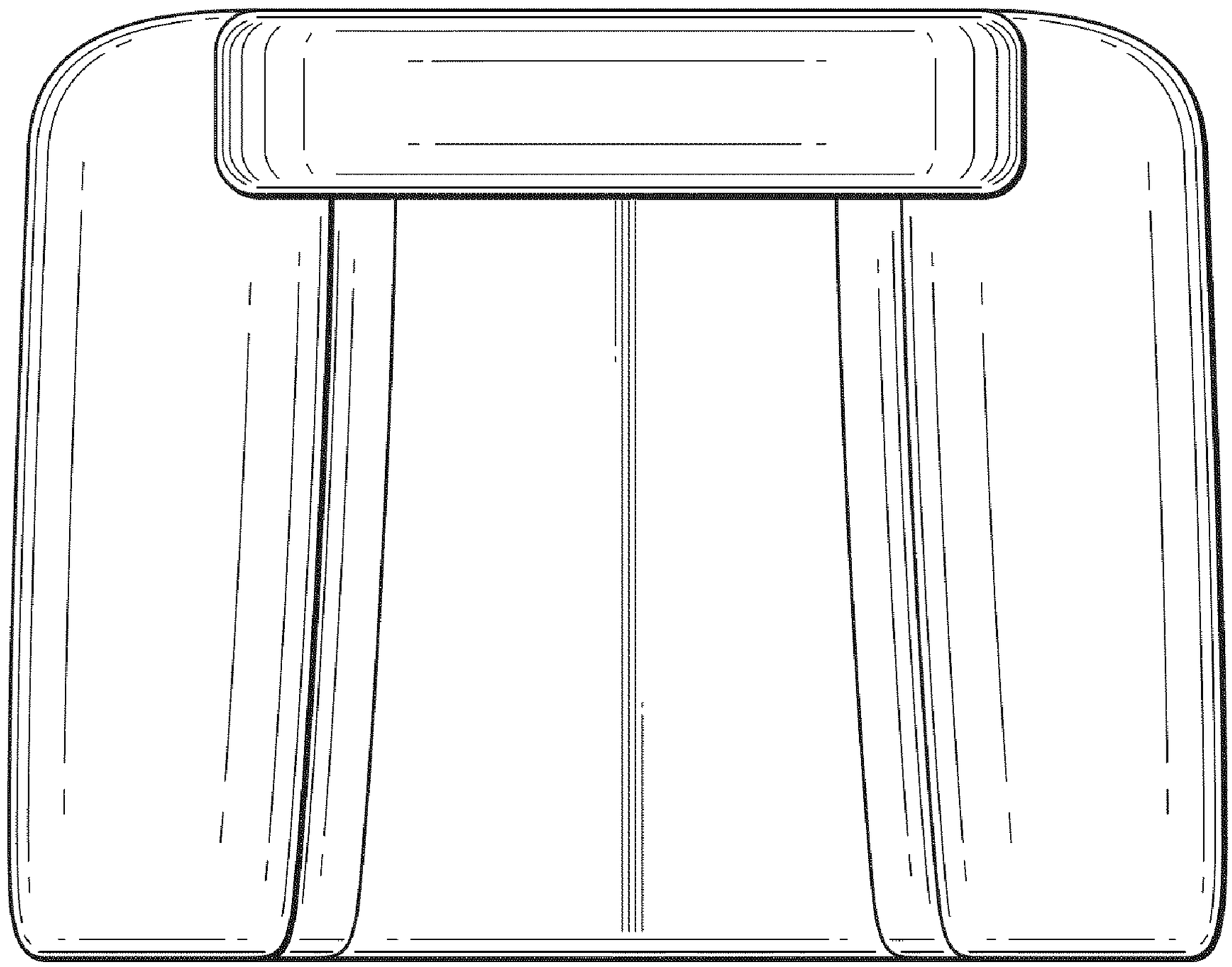

FIG. 4

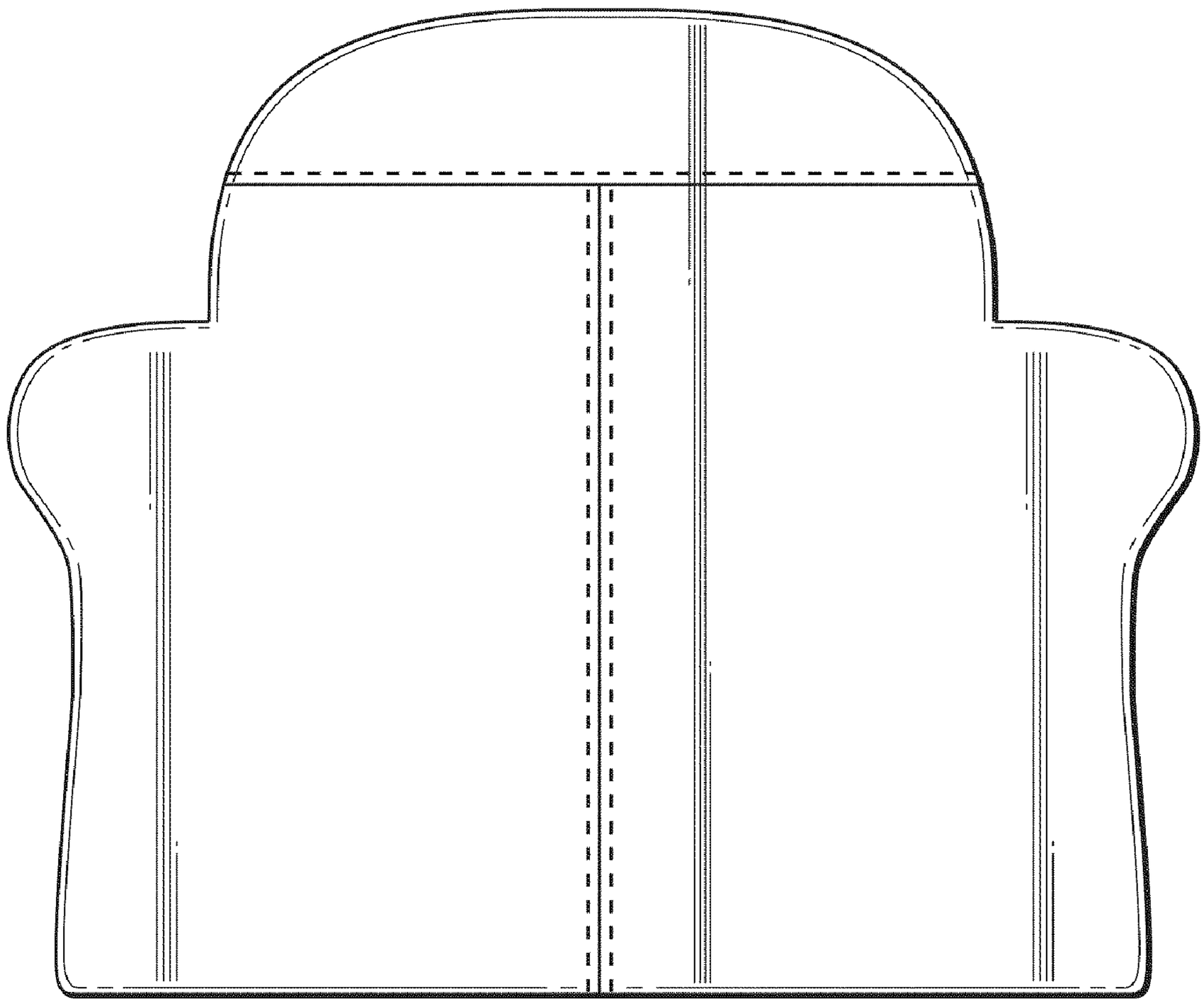

FIG. 5