US00D625125S

(12) United States Design Patent

Buckles et al.

(10) Patent No.: US D625,125 S
(45) Date of Patent: ** Oct. 12, 2010

(54) **COOLER**

(75) Inventors: **John Buckles**, Chicago, IL (US); **Daniel Noe**, Frisco, TX (US); **Gregory Butz**, Glenview, IL (US); **Shereen Besselle**, Bronx, NY (US); **Adam Harter**, Danbury, CT (US); **Emad Jafa**, Brewster, NY (US)

(73) Assignee: **PepsiCo, Inc.**, Purchase, NY (US)

(**) Term: **14 Years**

(21) Appl. No.: **29/332,392**

(22) Filed: **Feb. 13, 2009**

(51) **LOC (9) Cl.** **06-04**
(52) **U.S. Cl.** **D6/470**
(58) **Field of Classification Search** D6/396, D6/397, 432, 436, 470, 471, 472, 475, 476, D6/479; 312/107, 114, 115, 116, 117, 138.1, 312/137, 204, 236, 401, 404, 405, 407, 407.1; D15/79, 81–85; 62/246, 251, 339, 373, 440, 62/444, 445, 449
See application file for complete search history.

(56) **References Cited**

U.S. PATENT DOCUMENTS

4,416,380	A		11/1983	Flum	
4,566,211	A		1/1986	Gustafson et al.	
4,676,074	A		6/1987	Morgan, Jr. et al.	
4,815,302	A		3/1989	Aoki et al.	
4,840,439	A		6/1989	Nara et al.	
4,953,362	A		9/1990	Shoji et al.	
D327,591	S	*	7/1992	Gogan	D6/470
5,277,486	A		1/1994	Bustos	
5,295,593	A		3/1994	Sturm	
D352,620	S	*	11/1994	Geisen et al.	D6/470
D352,850	S	*	11/1994	Fujii	D6/479
D360,090	S	*	7/1995	Raebel et al.	D6/470
D366,578	S	*	1/1996	Cormican et al.	D6/470
D373,689	S	*	9/1996	Lladro Roig et al.	D6/436
5,553,934	A		9/1996	Wells et al.	
D388,466	S		12/1997	Yurchak	
D402,138	S	*	12/1998	Trulaske, Sr.	D6/470
D402,139	S	*	12/1998	Dzurovsak	D6/470
D404,934	S	*	2/1999	Summervile et al.	D6/470
6,257,010	B1		7/2001	Shei et al.	

(Continued)

Primary Examiner—Mimosa De
(74) *Attorney, Agent, or Firm*—Banner & Witcoff, Ltd.

(57) **CLAIM**

The ornamental design for a cooler, as shown and described.

DESCRIPTION

FIG. **1** is a front left perspective view of a cooler showing a first embodiment of our new design;

FIG. **2** is a front view thereof;

FIG. **3** is a left view thereof;

FIG. **4** is a right view thereof;

FIG. **5** is a rear view thereof;

FIG. **6** is a front left perspective view of a cooler showing a second embodiment of our new design;

FIG. **7** is a front view thereof;

FIG. **8** is a left view thereof;

FIG. **9** is a right view thereof;

FIG. **10** is a rear view thereof;

FIG. **11** is a front left perspective view of a cooler showing a third embodiment of our new design;

FIG. **12** is a front view thereof;

FIG. **13** is a left view thereof;

FIG. **14** is a right view thereof; and,

FIG. **15** is a rear view thereof.

The dot-dash-dot broken line showing represents unclaimed boundaries of the claimed design. The dot-dot broken line showing represents environmental structure and forms no part of the claimed design.

1 Claim, 15 Drawing Sheets

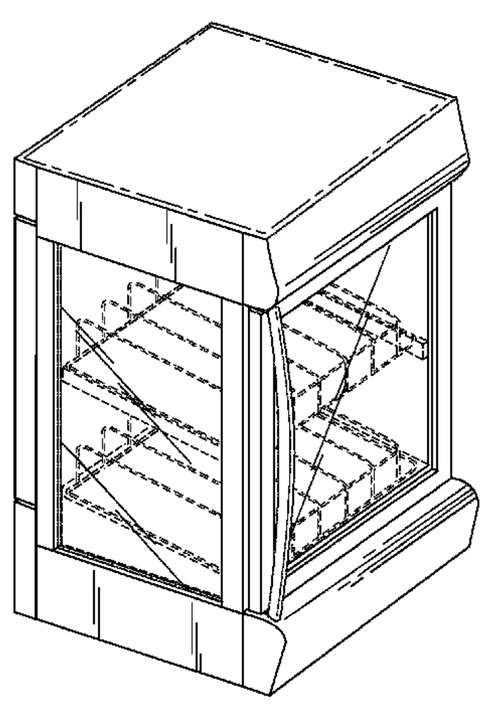

U.S. PATENT DOCUMENTS

D446,248	S		8/2001	Rawlins
6,351,964	B1		3/2002	Brancheau et al.
6,672,092	B2		1/2004	Ruiz et al.
6,817,201	B2		11/2004	Yingst
D503,743	S		4/2005	Huffer et al.
6,971,247	B2		12/2005	Yamazaki et al.
6,971,250	B1		12/2005	Imre et al.
D523,904	S		6/2006	Huffer et al.
D528,346	S		9/2006	Brekke
7,162,885	B2		1/2007	Sakanoue et al.
D554,905	S	*	11/2007	Kumazawa D6/470
RE040,151	E		3/2008	Shei et al.
7,360,374	B2		4/2008	LaRose, Jr.
D594,254	S	*	6/2009	Mori D6/470
D608,565	S	*	1/2010	Mori D6/470

* cited by examiner

Fig. 1

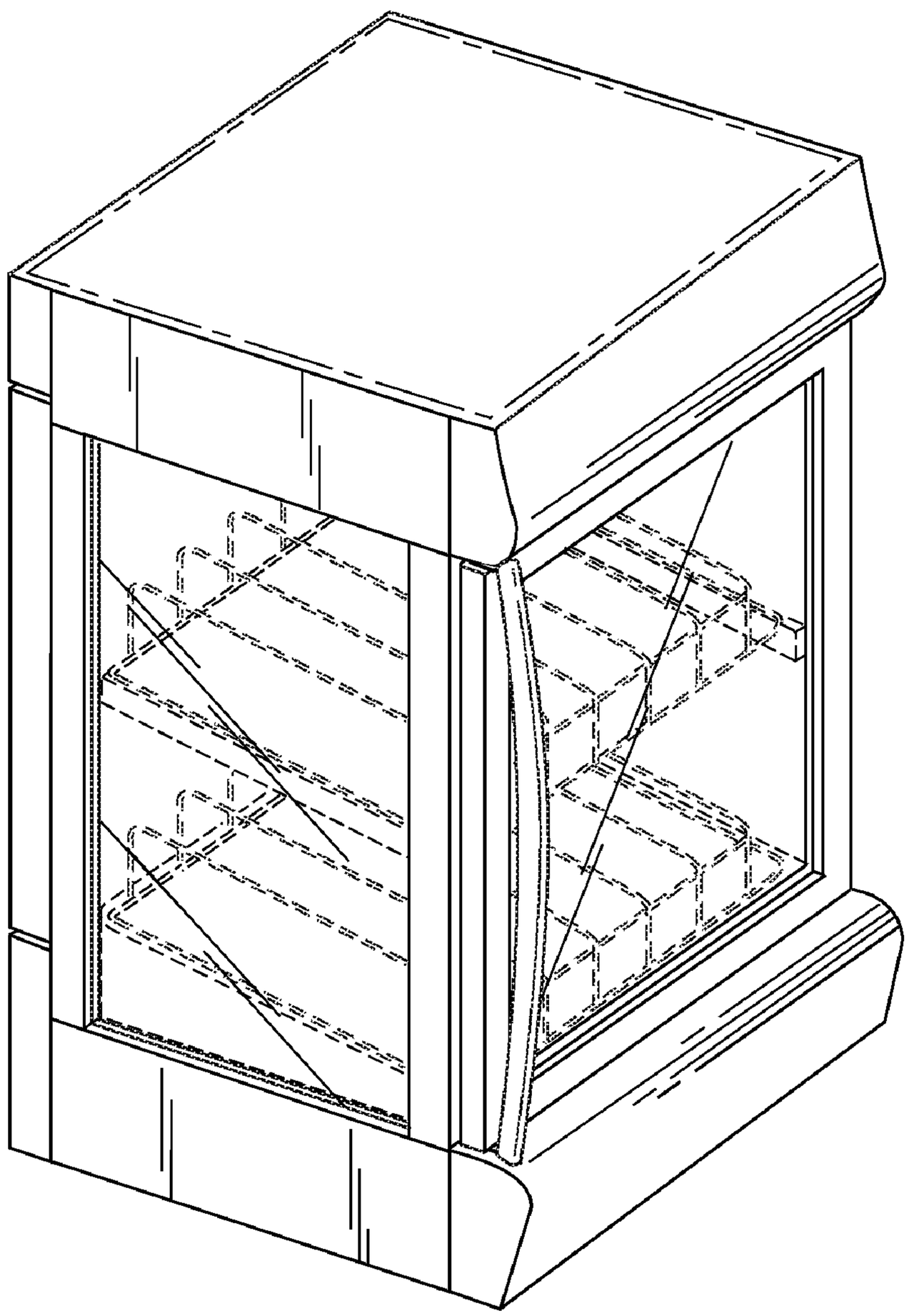

Fig. 2

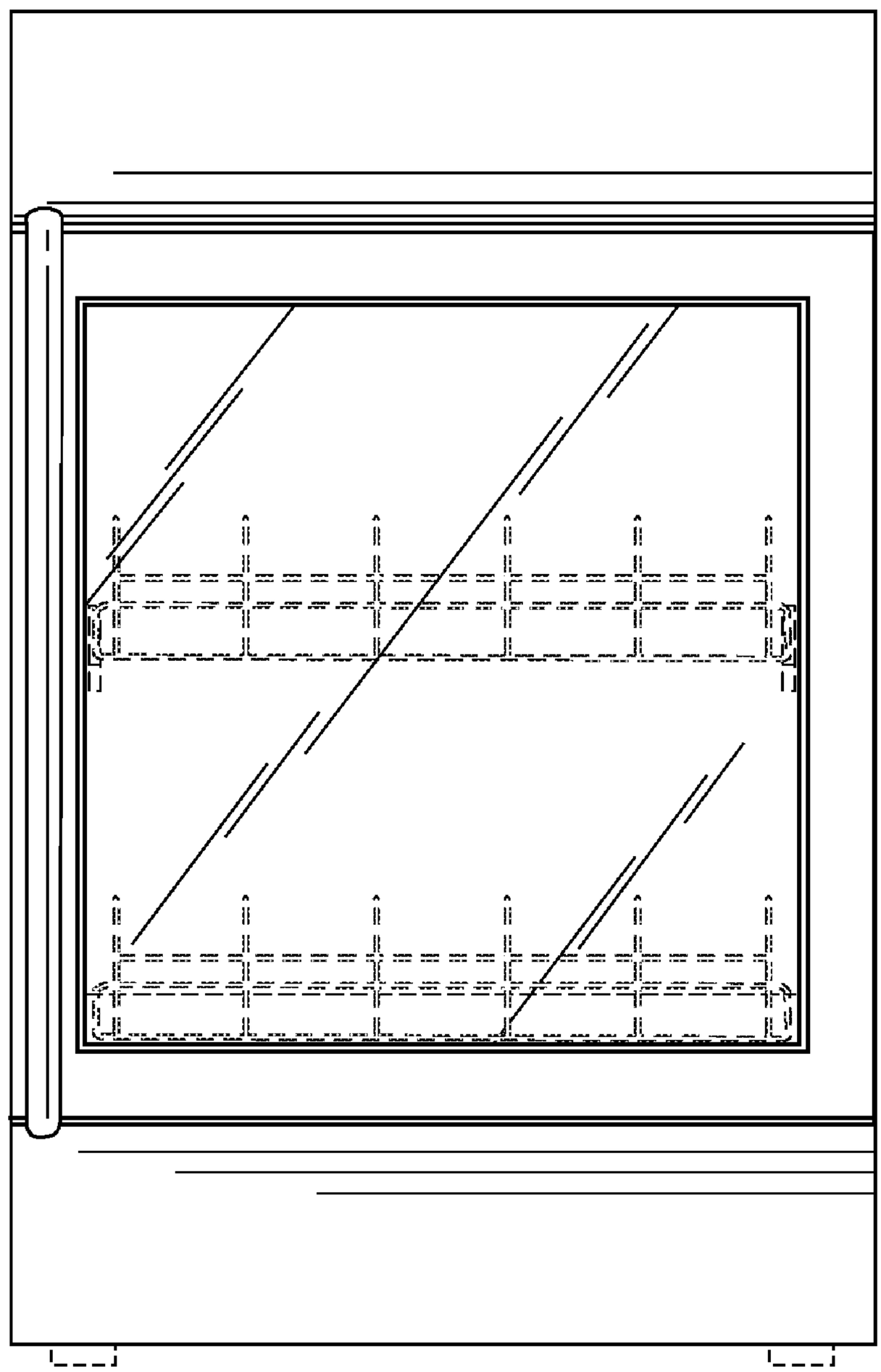

Fig. 3

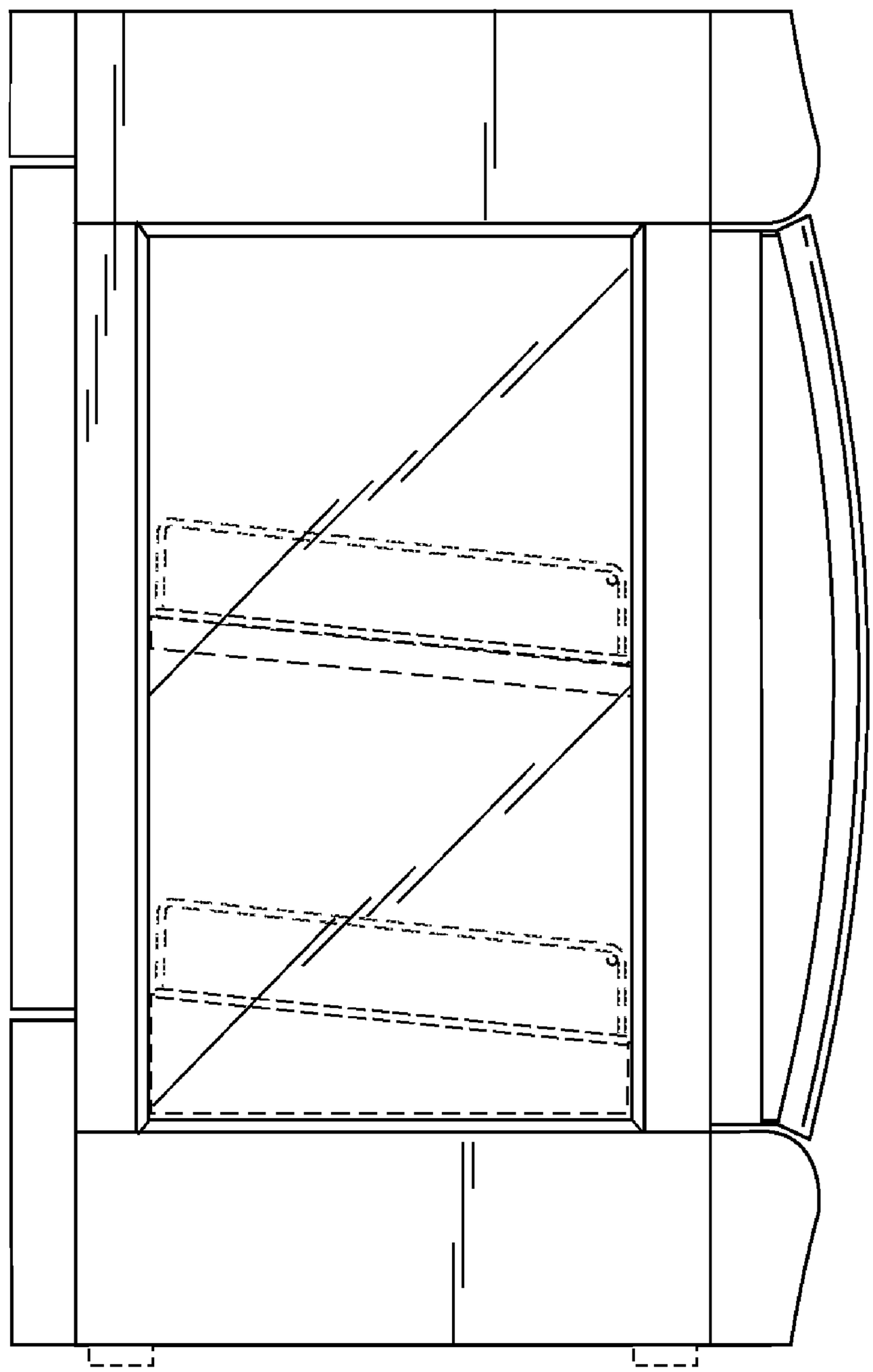

Fig. 4

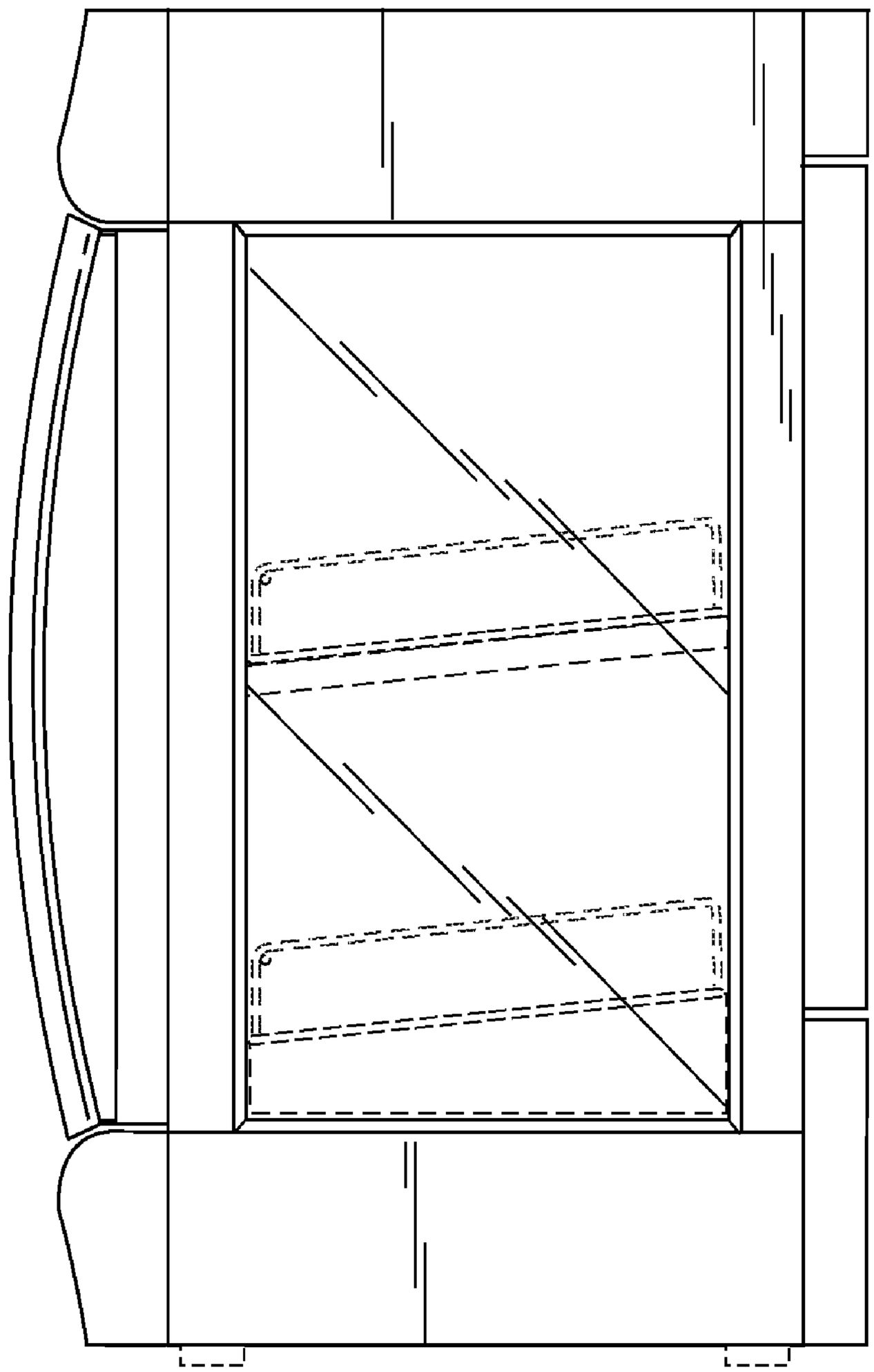

Fig. 5

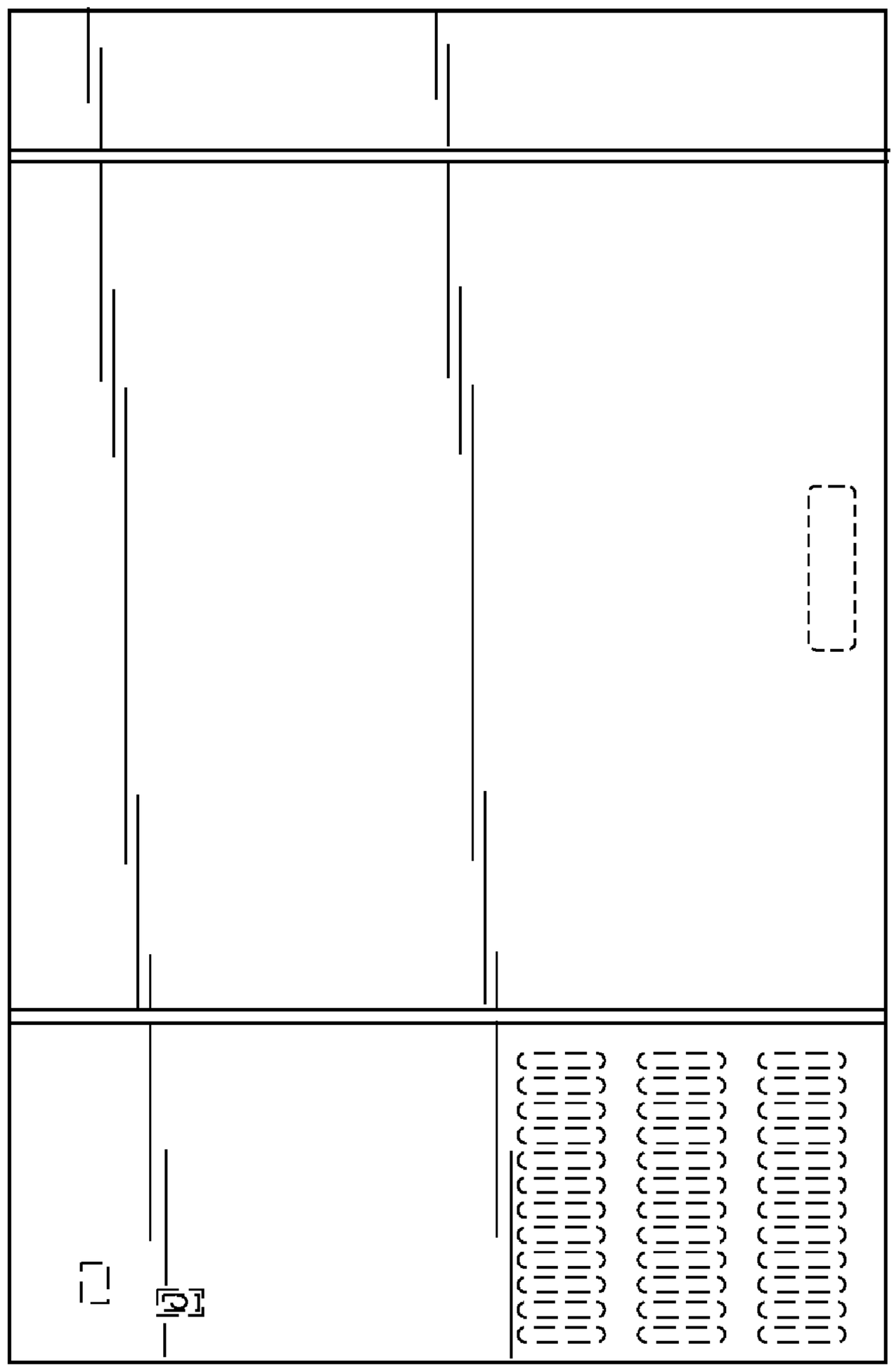

Fig. 6

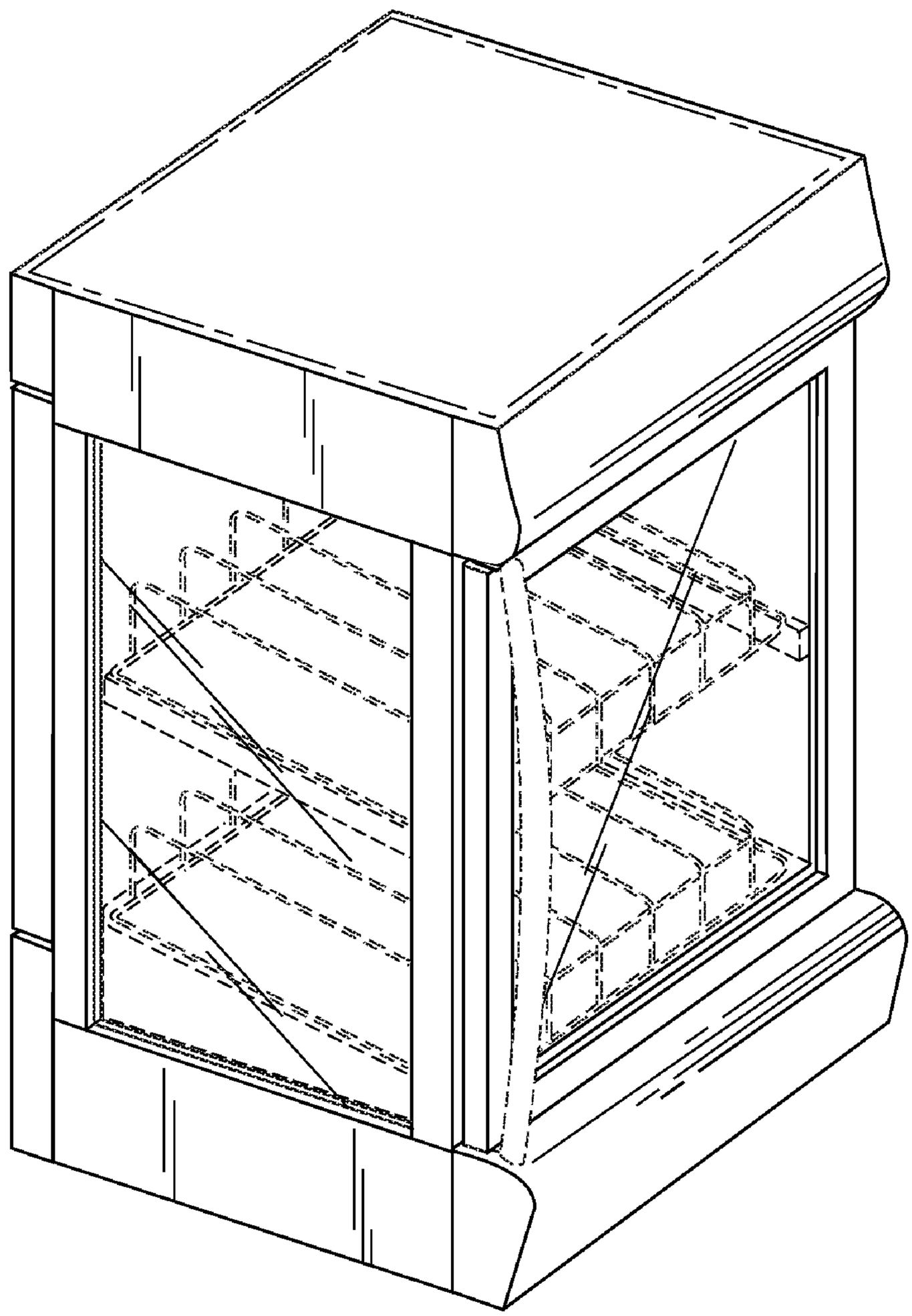

Fig. 7

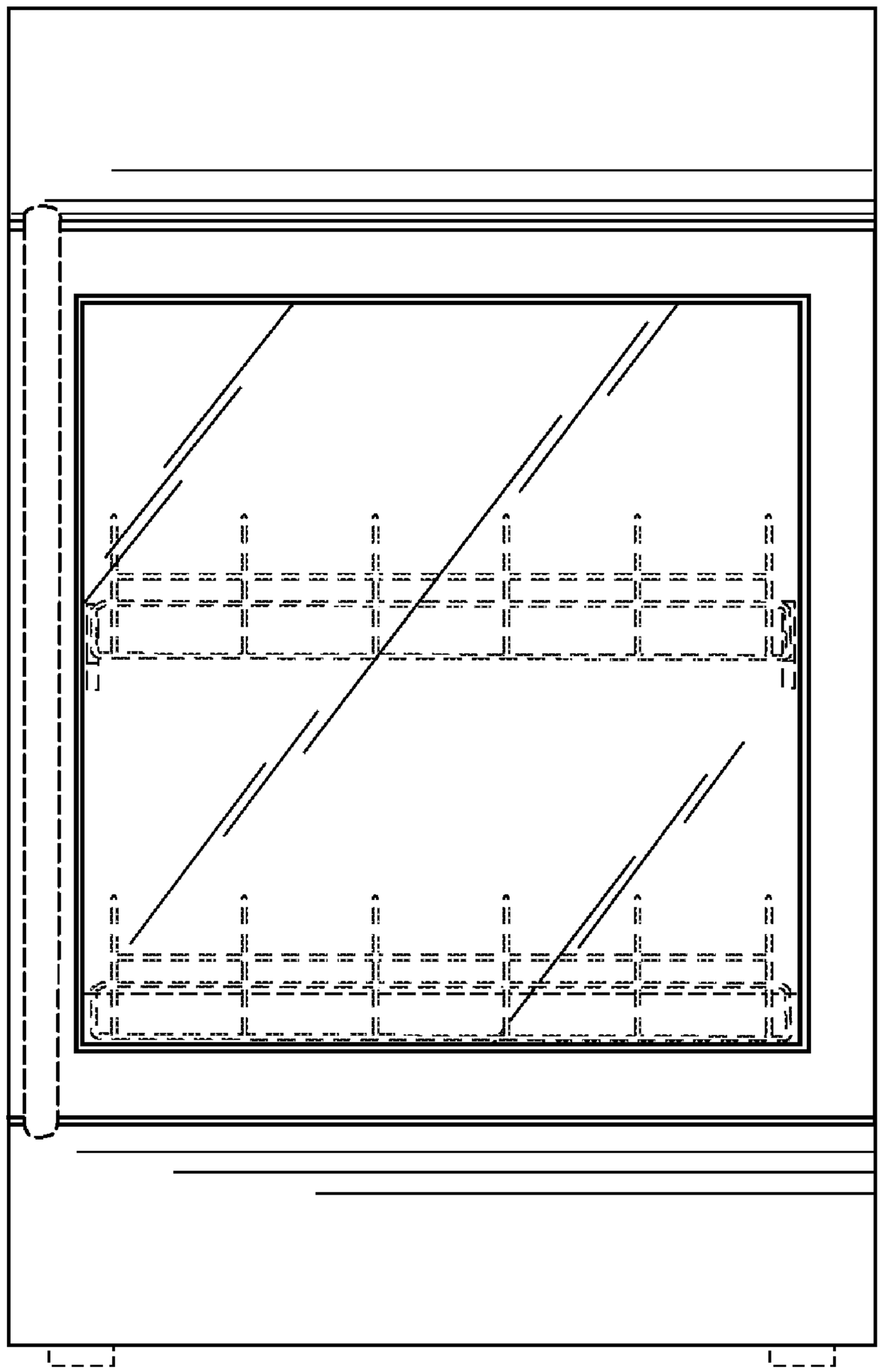

Fig. 8

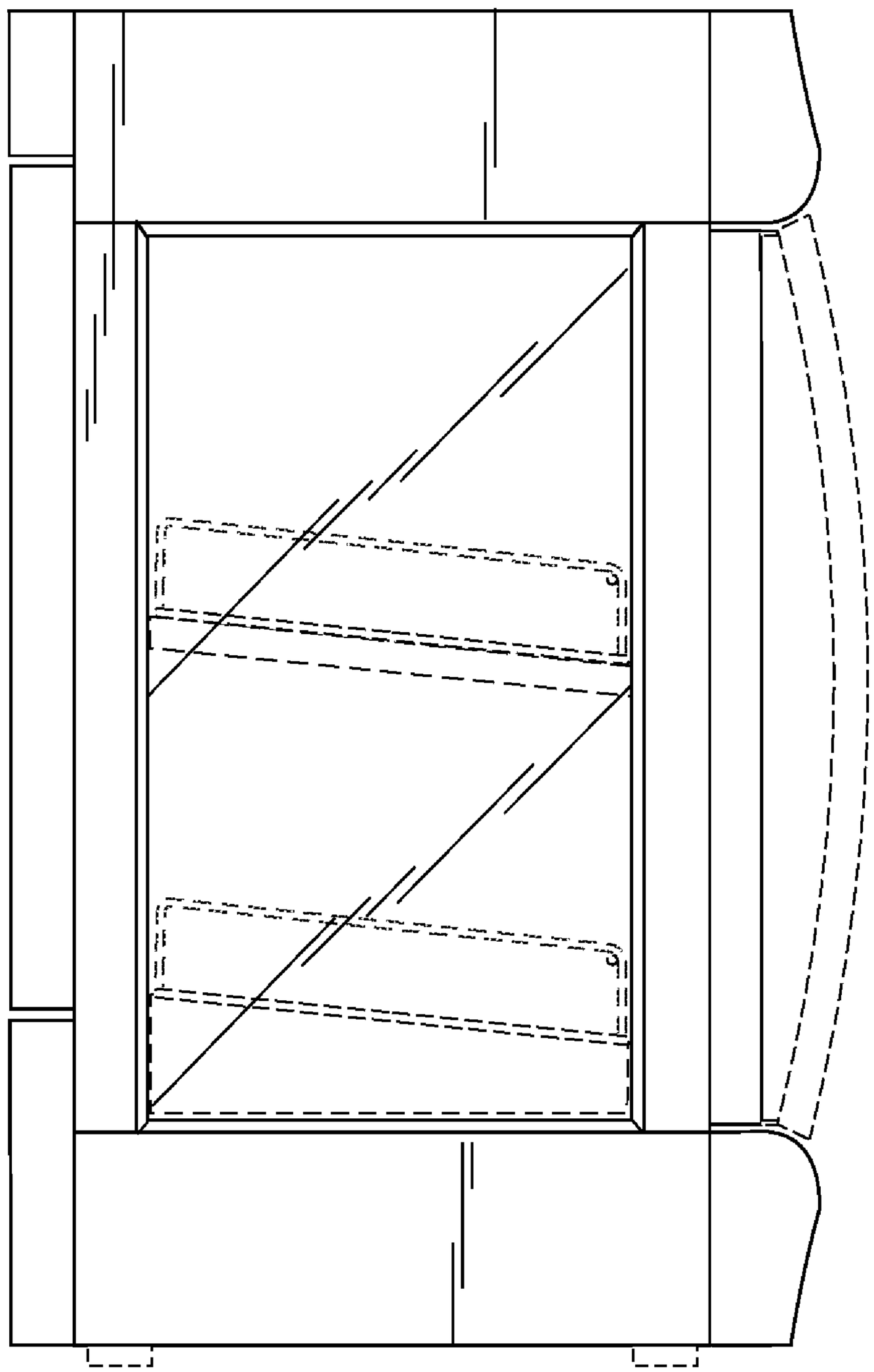

Fig. 9

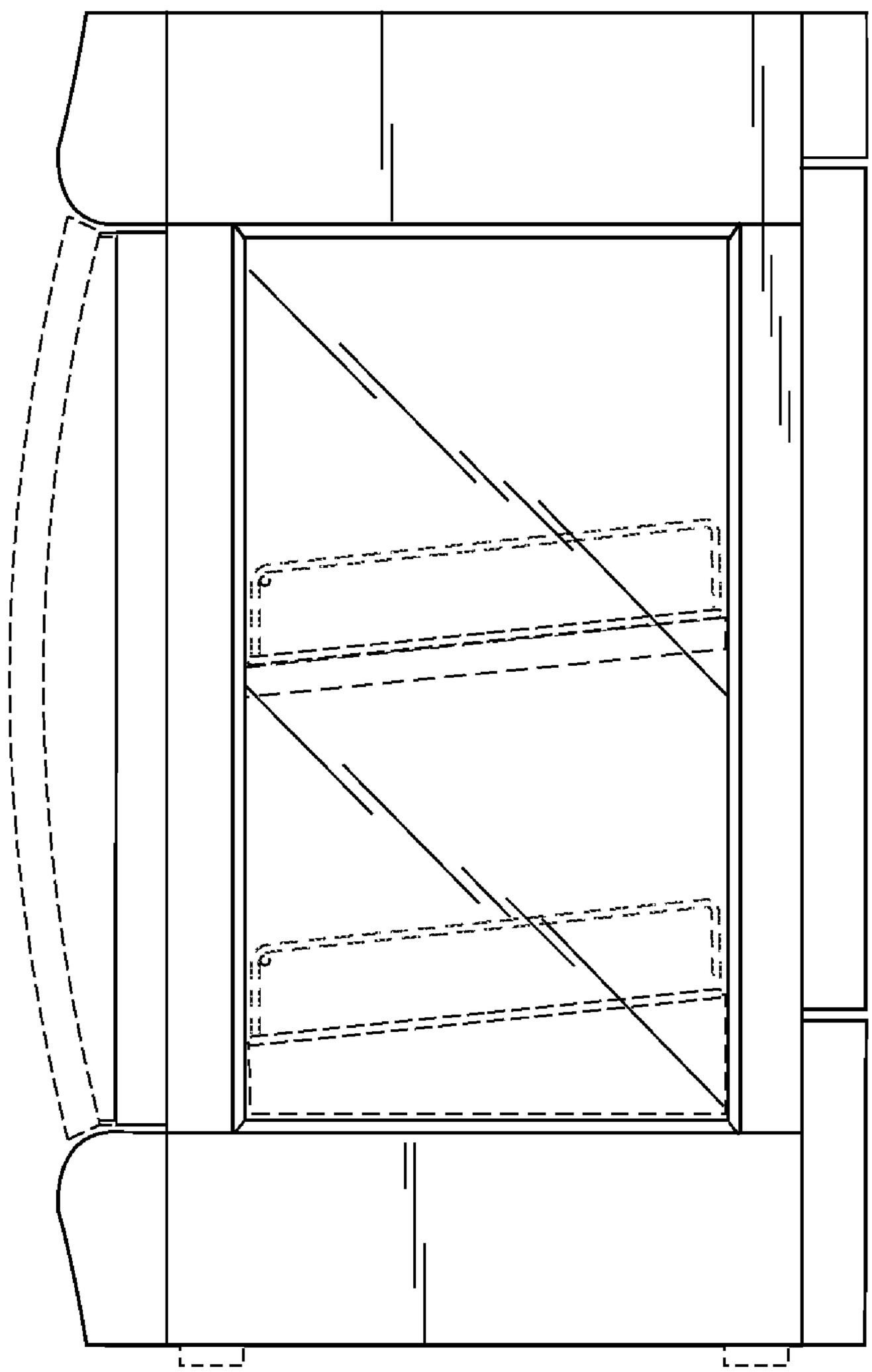

Fig. 10

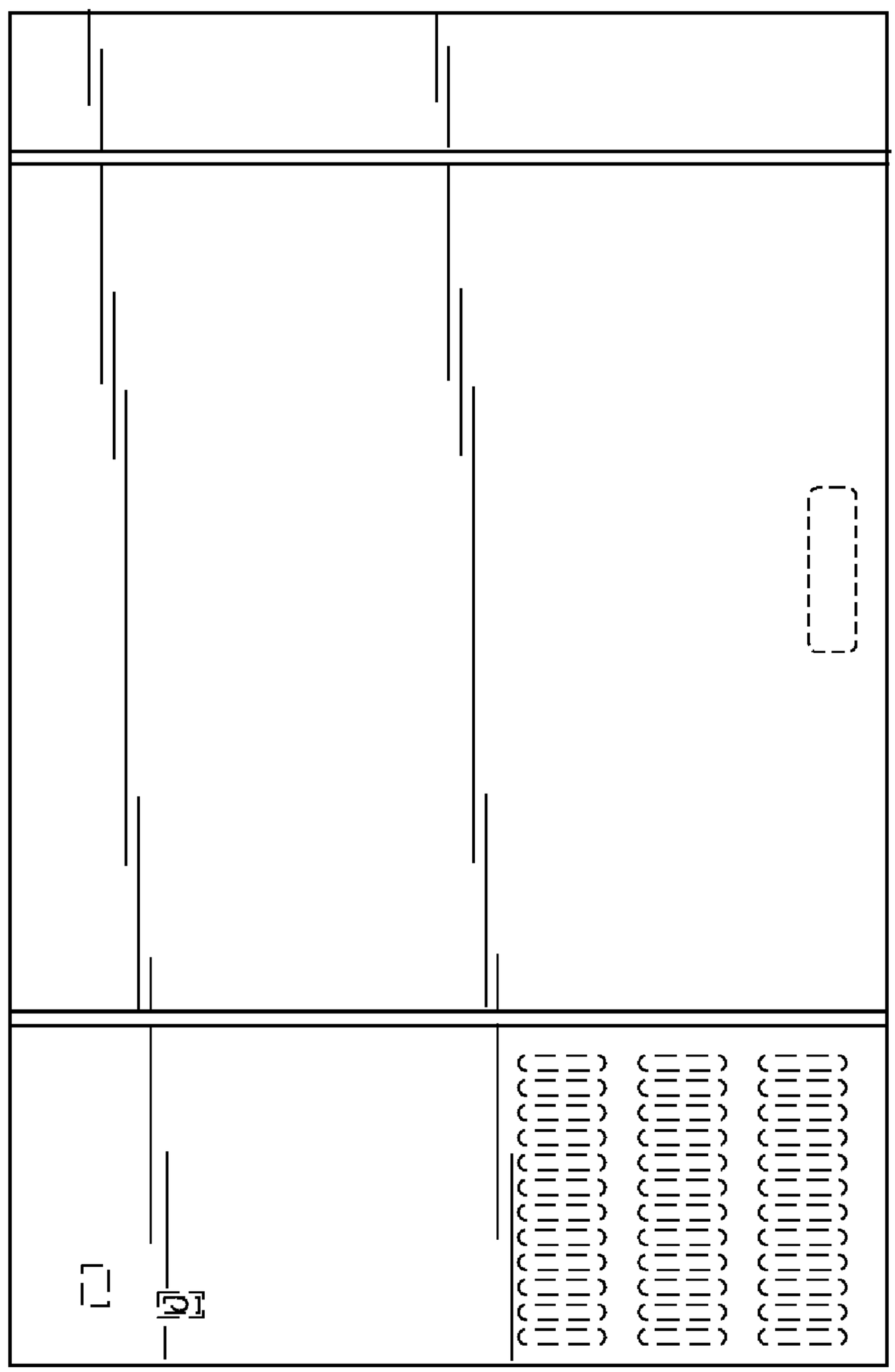

Fig. 11

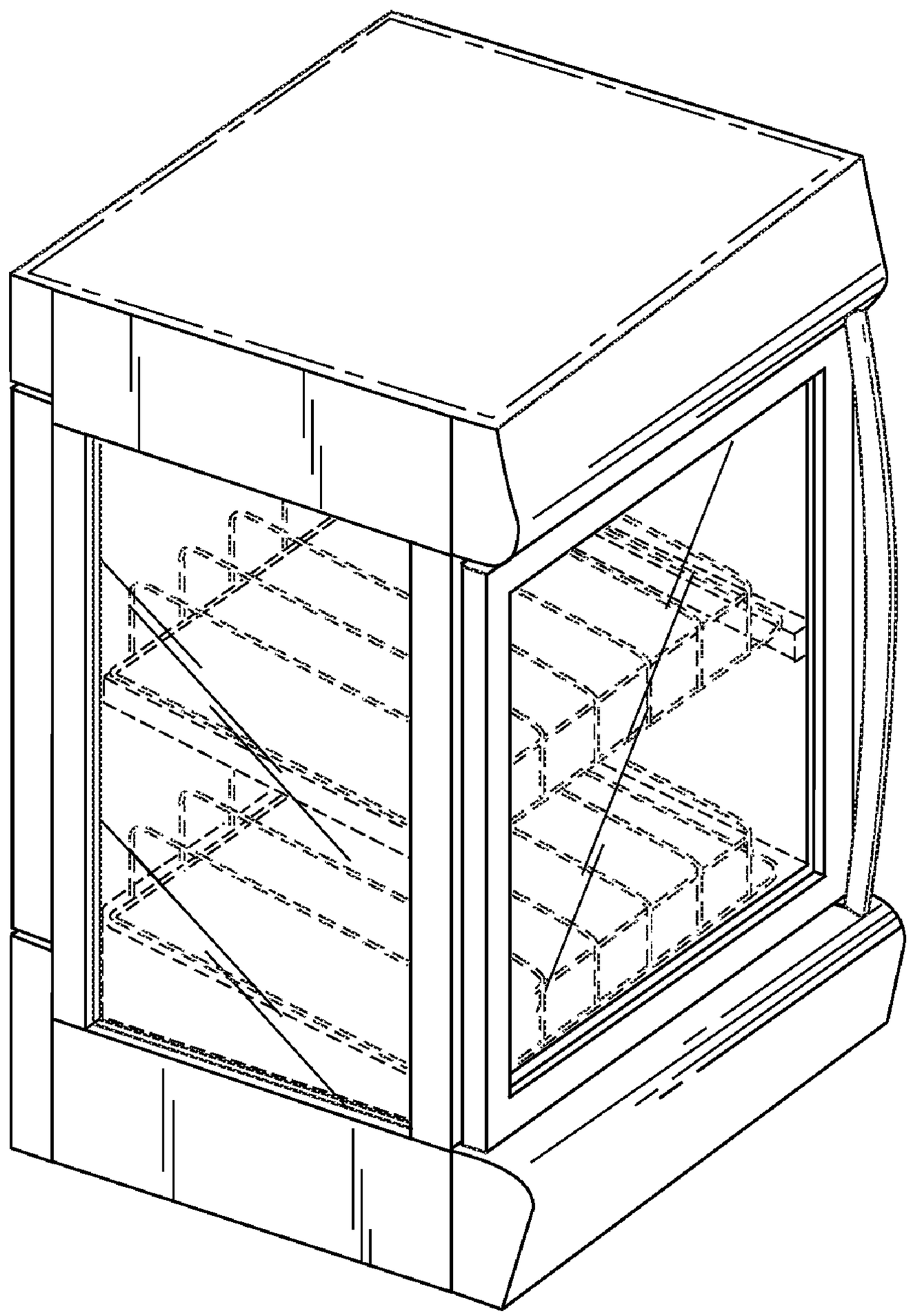

Fig. 12

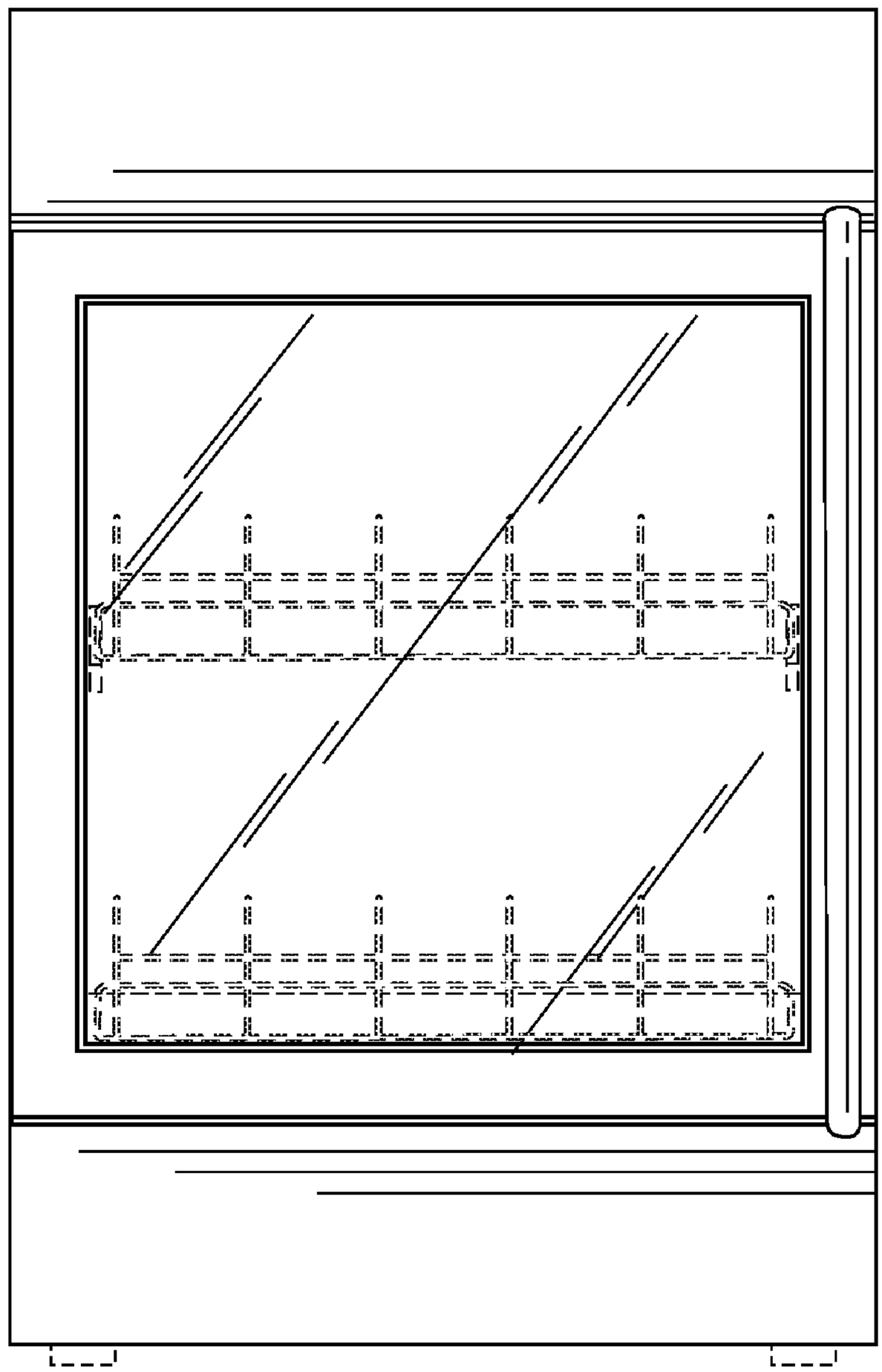

Fig. 13

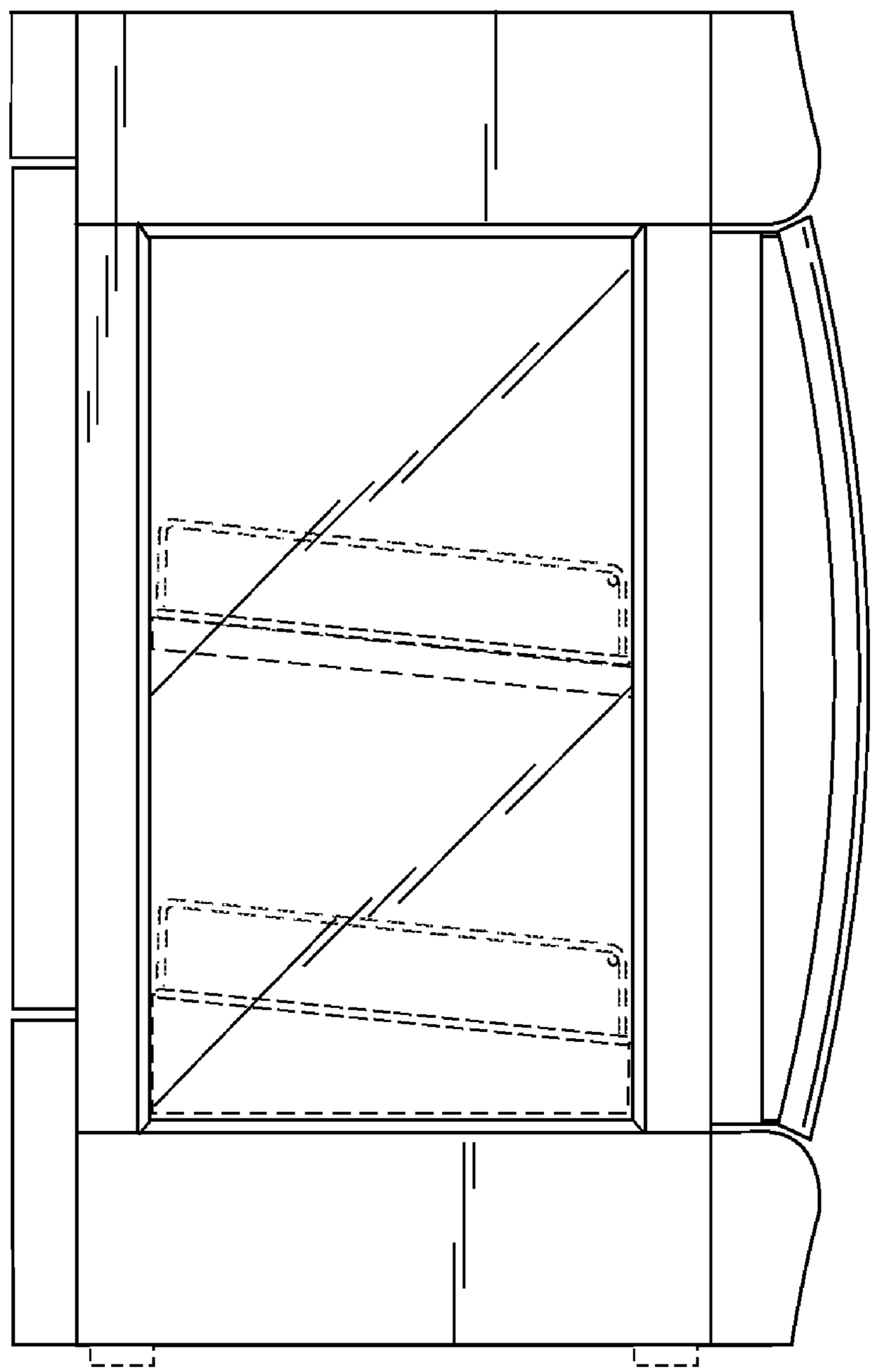

Fig. 14

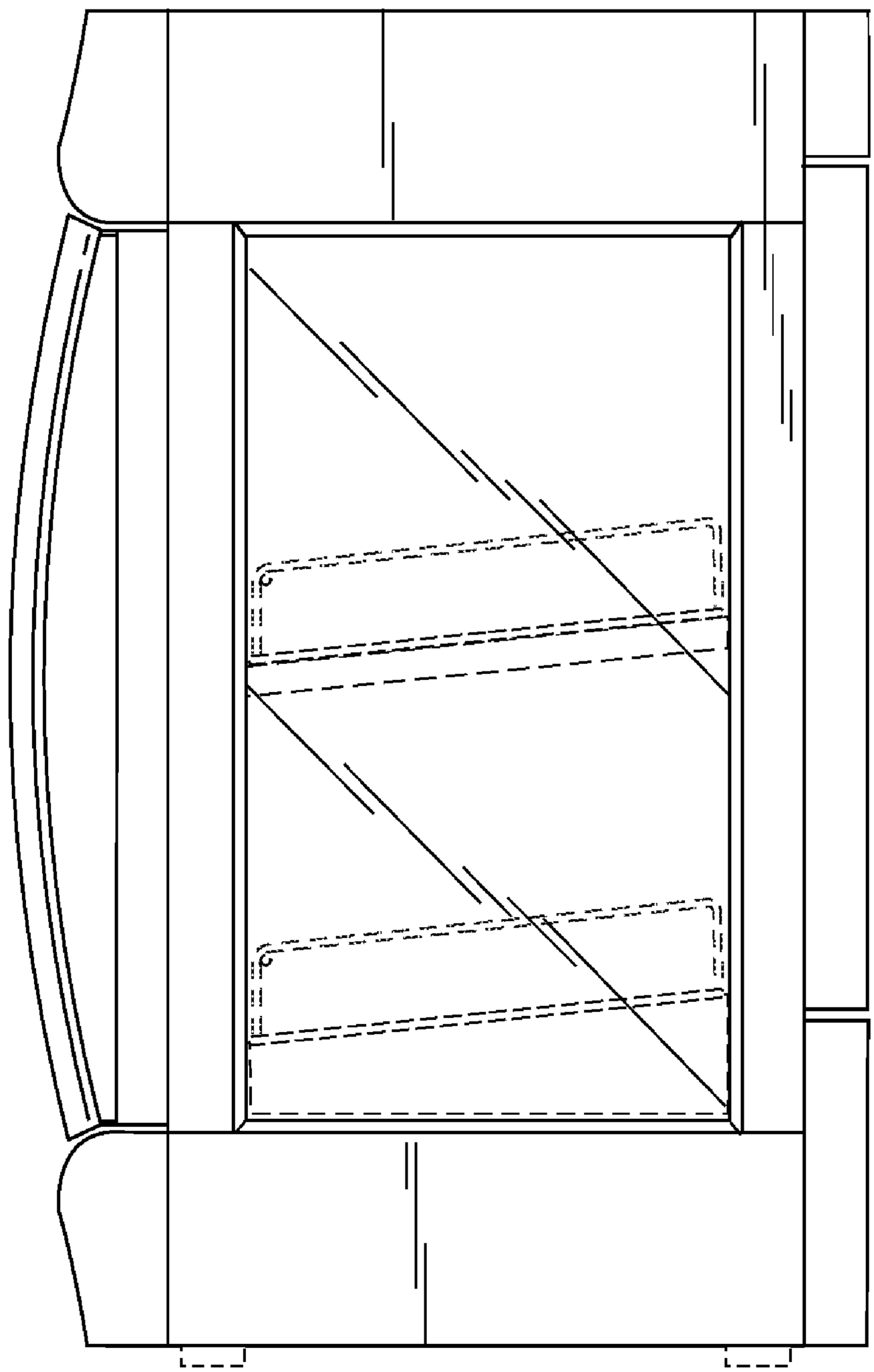
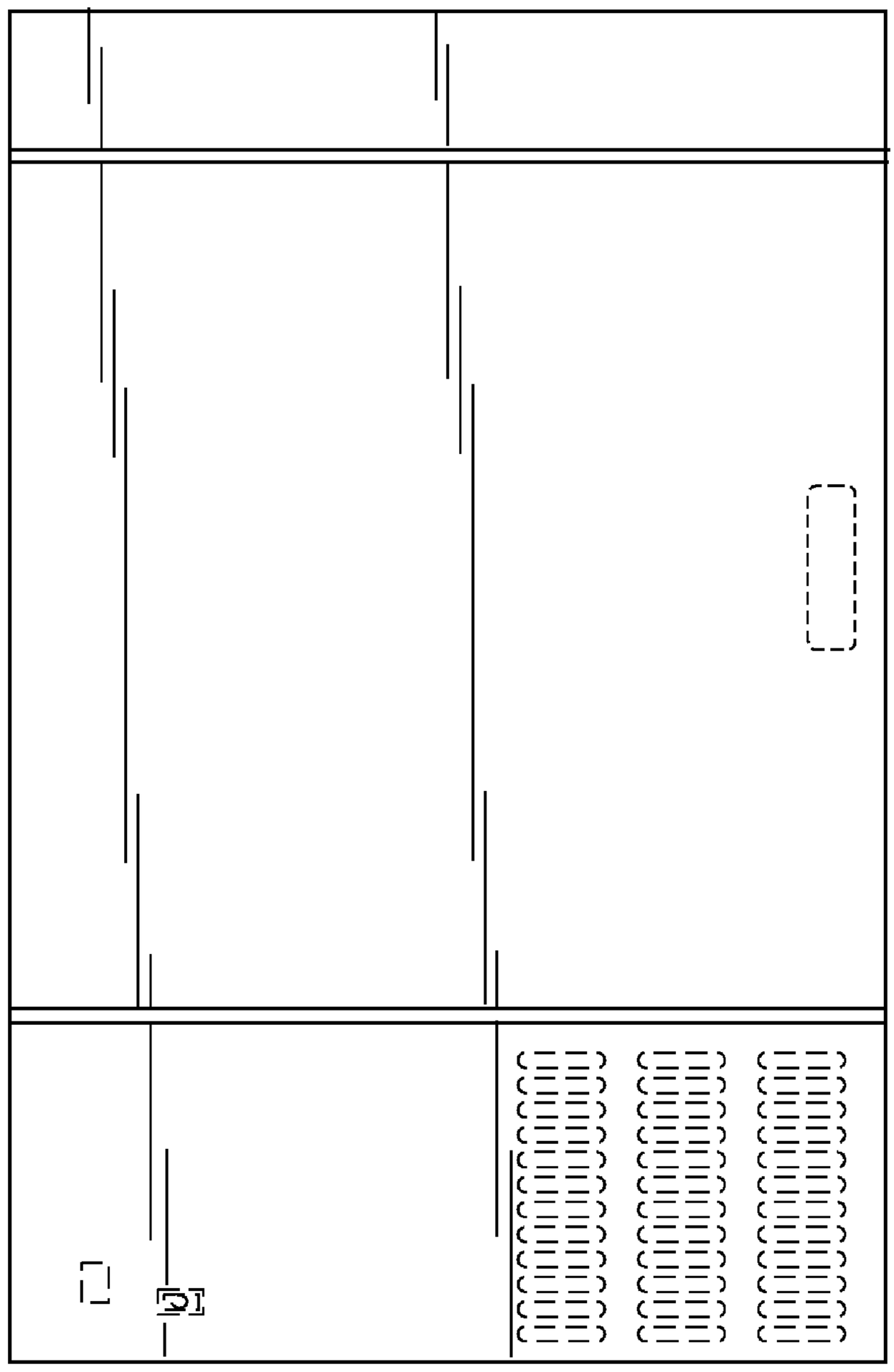
Fig. 15