US00D624768S

(12) United States Design Patent

Clark et al.

(10) Patent No.: US D624,768 S
(45) Date of Patent: ** Oct. 5, 2010

(54) **MULTI-PANEL SIGN**

(75) Inventors: **Jeremy A. Clark**, Minneapolis, MN (US); **Michael A. Whittier**, Minneapolis, MN (US)

(73) Assignee: **Target Brands, Inc.**, Minneapolis, MN (US)

(**) Term: **14 Years**

(21) Appl. No.: **29/351,147**

(22) Filed: **Dec. 1, 2009**

Related U.S. Application Data

(63) Continuation of application No. 11/777,765, filed on Jul. 13, 2007, now Pat. No. 7,644,527.

(51) **LOC (9) Cl.** **06-04**
(52) **U.S. Cl.** **D6/509**
(58) **Field of Classification Search** D6/509, D6/409, 474, 301, 511, 553, 567, 569; 160/135, 160/231.2; D11/132, 131, 133, 157; 211/169, 211/131, 42, 70.1, 86.01, 87.01, 90.01, 134; 40/606.01, 700, 711, 735; 256/25; 181/30
See application file for complete search history.

(56) **References Cited**

U.S. PATENT DOCUMENTS

1,595,929	A *	8/1926	Rhodes	160/135
1,736,726	A	11/1929	Young	
2,896,789	A	7/1959	Sans et al.	
3,059,362	A	10/1962	Scherotto	
3,149,727	A	9/1964	Magers	
3,232,370	A *	2/1966	Jaffe	181/30
D206,037	S *	10/1966	Best	D6/409
3,351,211	A *	11/1967	Best	211/169
3,397,771	A	8/1968	Fogle	
3,605,851	A *	9/1971	Miles et al.	160/135
3,677,322	A *	7/1972	Brorson et al.	160/135
3,889,736	A *	6/1975	Firks	160/135
4,035,941	A	7/1977	Deffner	
4,322,007	A	3/1982	Feibelman	
4,372,086	A *	2/1983	Hanlon	160/135
4,655,354	A	4/1987	Cohen	
4,685,573	A	8/1987	Ovitz, III	
4,932,539	A	6/1990	Abinanti	
D318,194	S	7/1991	Terrell et al.	
D319,934	S	9/1991	Terrell et al.	
D322,188	S	12/1991	Leis et al.	
D327,788	S	7/1992	Allen	
5,240,127	A	8/1993	Levin et al.	
D362,981	S	10/1995	Lechleiter et al.	
5,465,852	A	11/1995	Koks et al.	
D394,360	S	5/1998	Geier et al.	
5,778,959	A *	7/1998	Guetschow	160/231.2
5,881,789	A *	3/1999	Melashenko et al.	160/135

(Continued)

Primary Examiner—Philip S Hyder
Assistant Examiner—Sydney R Buffalow
(74) *Attorney, Agent, or Firm*—Griffiths & Seaton PLLC

(57) **CLAIM**

The ornamental design for a multi-panel sign, as shown and described.

DESCRIPTION

FIG. **1** is an isometric view of a multi-panel sign showing our new design;

FIG. **2** is a front view thereof;

FIG. **3** is a rear view thereof;

FIG. **4** is a top view thereof

FIG. **5** is a bottom view thereof;

FIG. **6** is a right end view thereof with a left end view being substantially identical to the right end view; and,

FIG. **7** is an isometric view thereof during use as part of a display system.

The features shown in broken lines depict environmental subject matter and form no part of the claimed design.

1 Claim, 3 Drawing Sheets

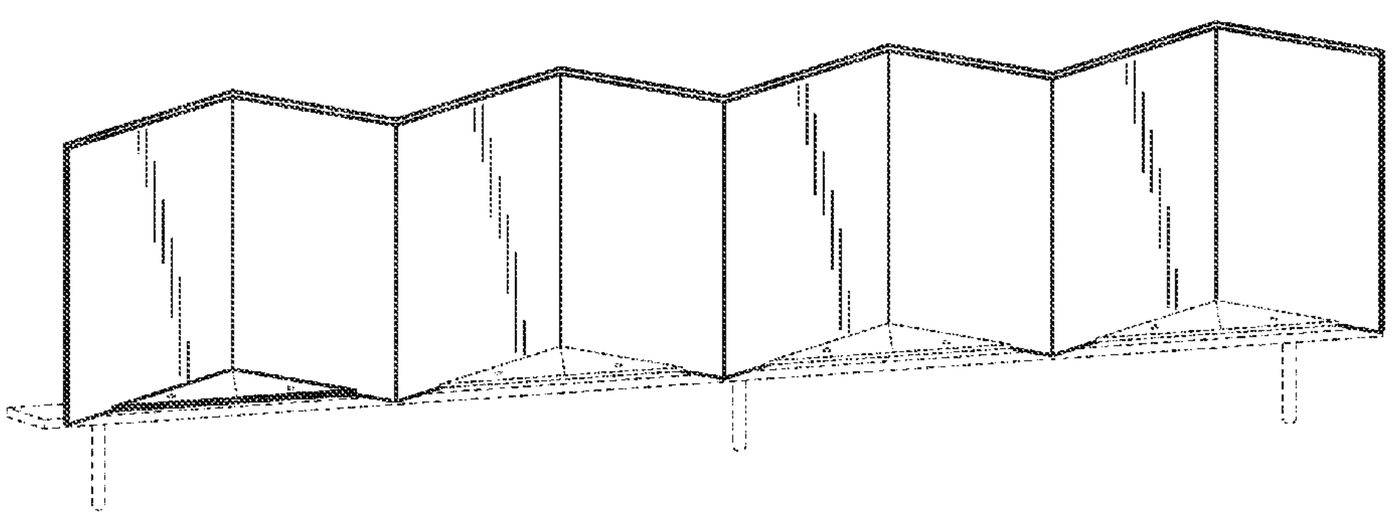

U.S. PATENT DOCUMENTS

D407,665	S *	4/1999	Churchville	D11/132
6,009,930	A *	1/2000	Jantschek	160/135
6,029,833	A	2/2000	Yeh	
6,062,402	A	5/2000	Ford	
D435,743	S	1/2001	Glauth et al.	
D450,948	S	11/2001	Stafford et al.	
6,364,137	B1	4/2002	Glauth et al.	
D457,751	S	5/2002	Stafford et al.	
D468,936	S	1/2003	Miranda	
D474,350	S	5/2003	Sardis	
6,644,484	B1	11/2003	Sardis	
6,786,340	B2	9/2004	Ford et al.	
6,892,784	B2 *	5/2005	Maas	160/135
6,915,916	B2	7/2005	Martins	
6,971,197	B1 *	12/2005	Seiber et al.	40/606.01
6,974,037	B2	12/2005	Haney	
7,007,814	B2	3/2006	Ploix	
7,213,632	B1 *	5/2007	Goldstein et al.	160/135
D555,398	S *	11/2007	Plumb	D6/474
7,350,772	B2 *	4/2008	Legrand	256/25
2003/0056697	A1	3/2003	Crown et al.	
2003/0150566	A1 *	8/2003	Ciano	160/135
2003/0221798	A1 *	12/2003	Hunt et al.	160/135
2004/0173325	A1 *	9/2004	Maas	160/135
2005/0230338	A1	10/2005	Farinola et al.	
2007/0170139	A1	7/2007	Clark et al.	
2010/0051211	A1 *	3/2010	Chen	160/135

* cited by examiner

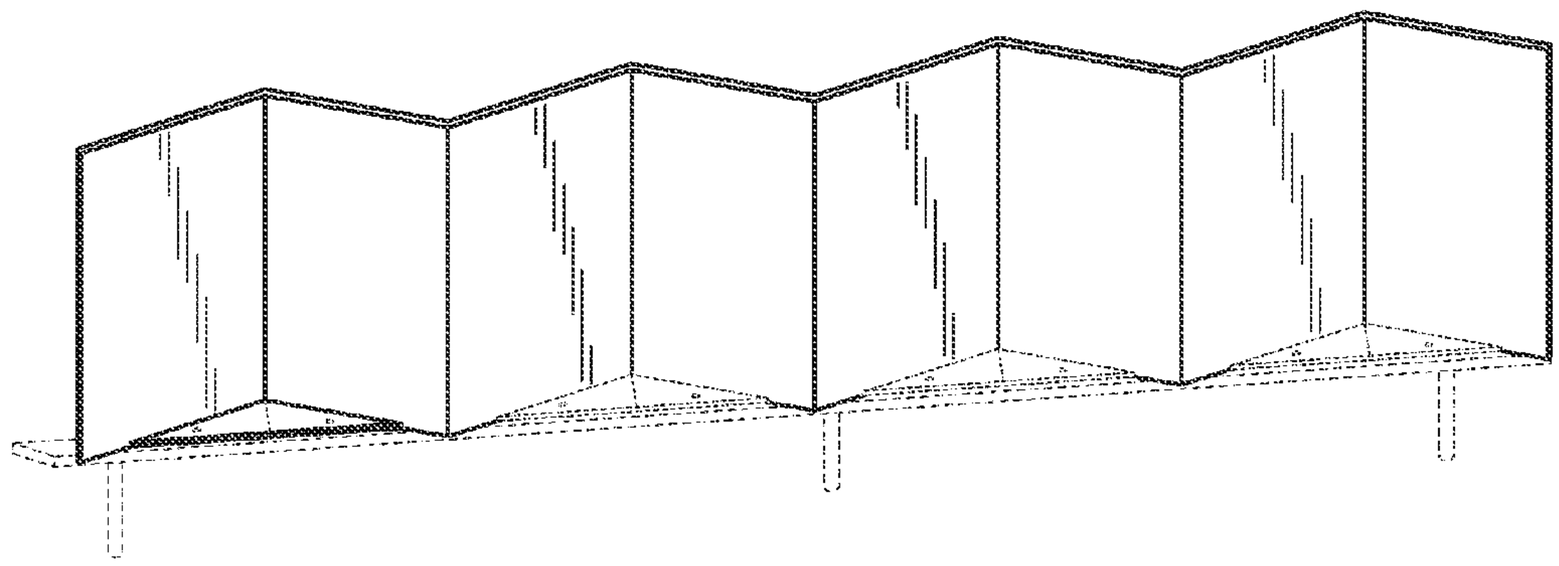

Fig. 1

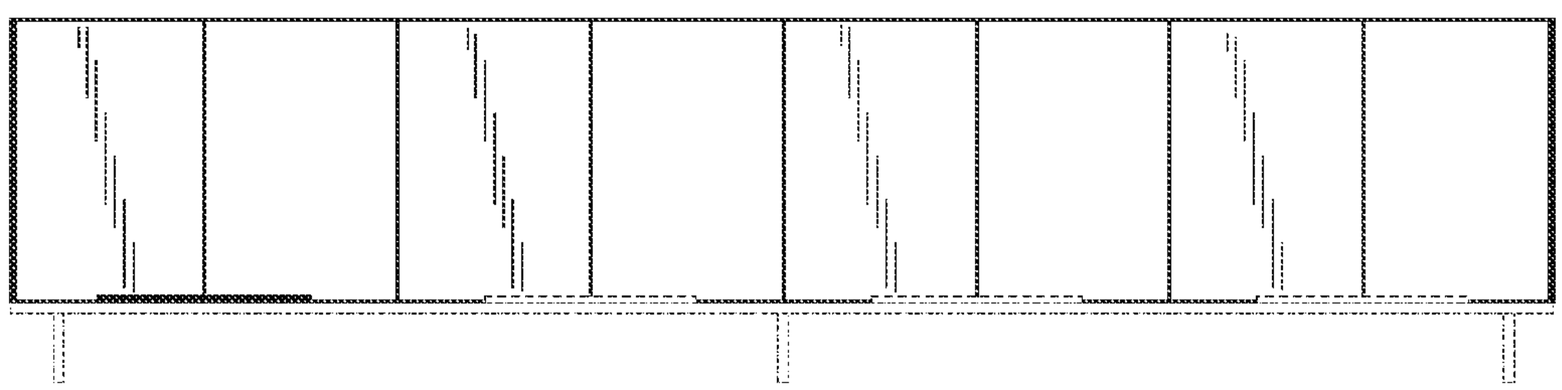

Fig. 2

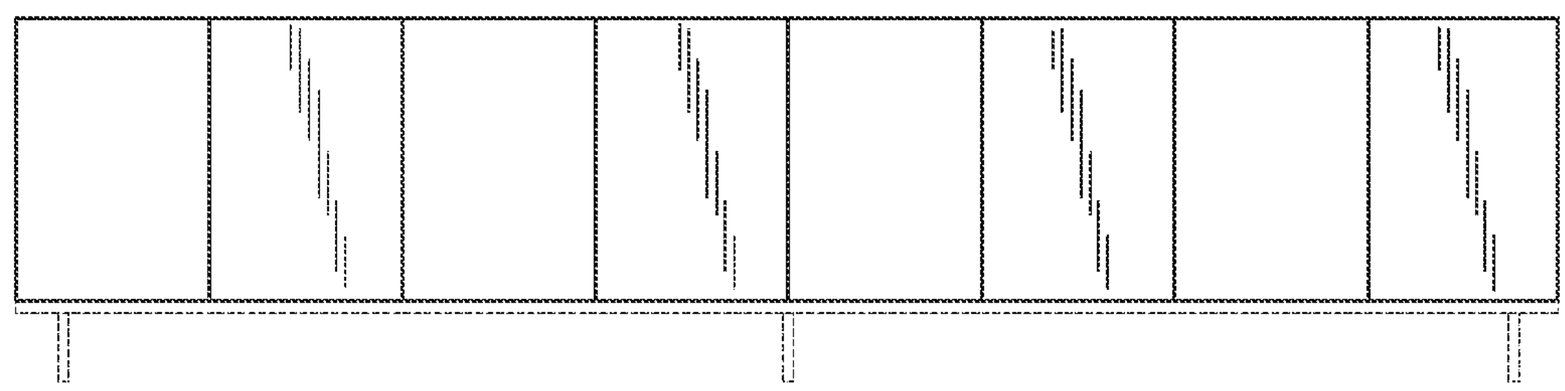

Fig. 3

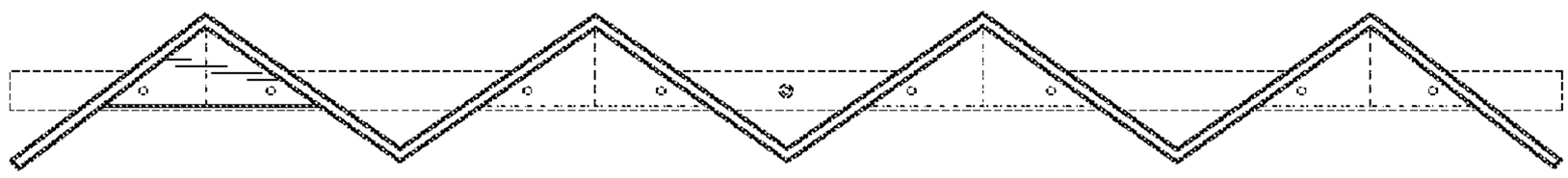

Fig. 4

Fig. 5

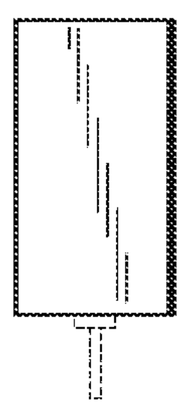

Fig. 6

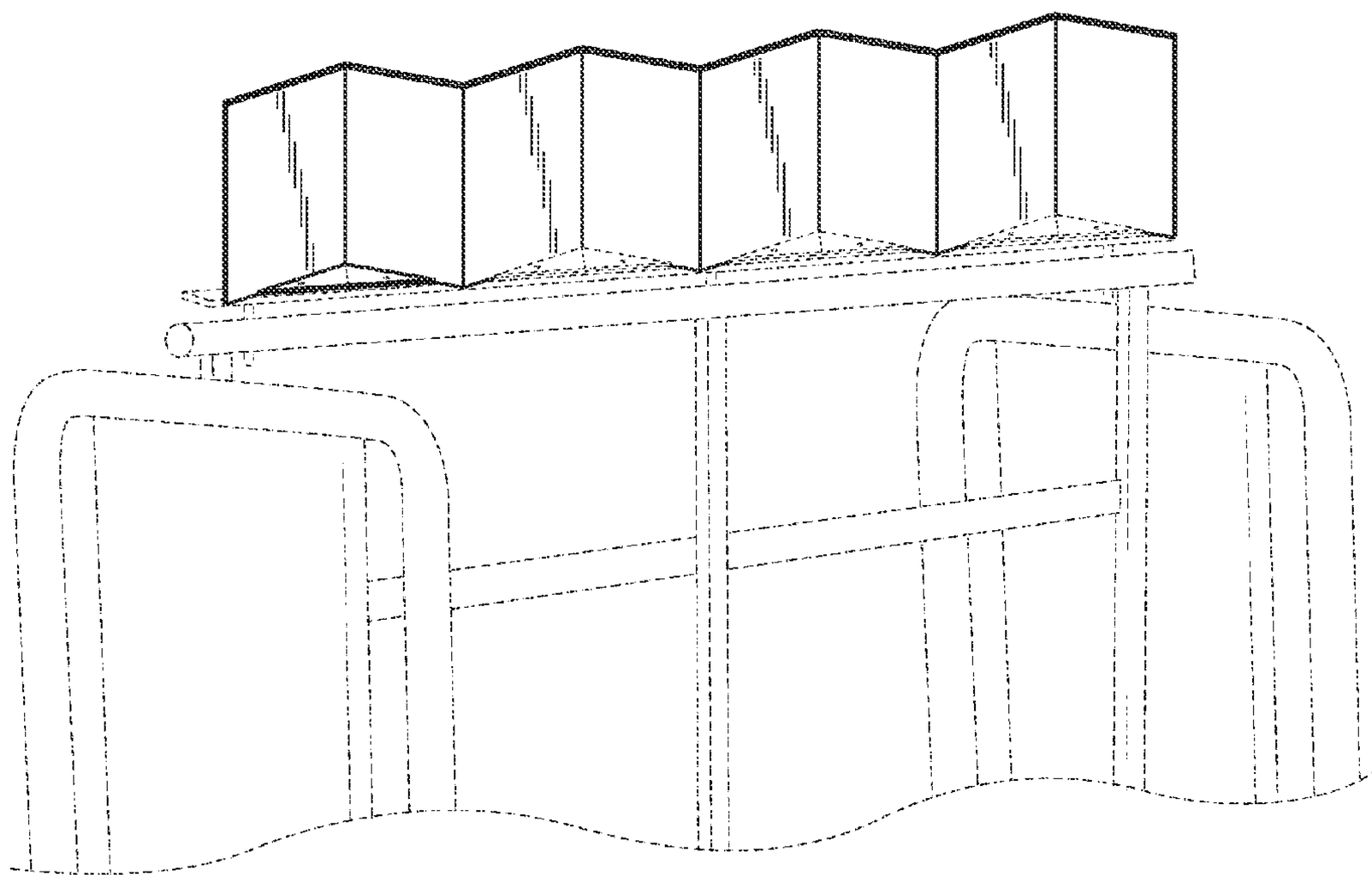

Fig. 7