US00D624707S

(12) United States Design Patent
Meritt

(10) Patent No.: US D624,707 S
(45) Date of Patent: ** Sep. 28, 2010

(54) **FAWN FEEDER**

(75) Inventor: **Rick Meritt**, Gilmer, TX (US)

(73) Assignee: **Rick Meritt Investments, Ltd.**, Gilmer, TX (US)

(**) Term: **14 Years**

(21) Appl. No.: **29/345,839**

(22) Filed: **Oct. 22, 2009**

Related U.S. Application Data

(63) Continuation of application No. 29/296,690, filed on Oct. 25, 2007, now Pat. No. Des. 603,104, which is a continuation of application No. 11/160,611, filed on Jun. 30, 2005, now Pat. No. 7,370,605, which is a continuation-in-part of application No. 09/920,231, filed on Aug. 1, 2001, now Pat. No. 6,920,841.

(51) **LOC (9) Cl.** **30-03**
(52) **U.S. Cl.** **D30/121**
(58) **Field of Classification Search** D30/133, D30/121, 122, 124, 127, 128, 132; 119/51.01, 119/61, 51.04, 53, 57.91, 54, 53.5, 52.4, 119/51.11, 63, 61.2, 52.1, 57.5, 57.6, 51.13, 119/62, 75, 500, 501; 239/7, 687, 379, 397.5; 222/199, 181.1, 181.2, 185.1, 557, 156, 485, 222/486, 548, 555; 220/200, 227, 247, 262; 221/174, 185.1, 289, 295, 296, 559; 454/35; 209/270, 283, 244; 52/194, 192; 49/279, 49/344, 357; D34/28
See application file for complete search history.

(56) **References Cited**

U.S. PATENT DOCUMENTS

347,416	A	8/1886	Buckingham
411,140	A	9/1889	Farrington et al.
423,712	A	3/1890	Arnold
485,142	A	10/1892	Stephens
587,803	A	8/1897	Ewer
1,214,881	A	2/1917	Bemtzen
1,237,016	A	8/1917	Brown
1,239,404	A	9/1917	Knoll, Jr.
1,309,671	A	7/1919	Weaver

(Continued)

FOREIGN PATENT DOCUMENTS

GB	2129266	A	5/1984

(Continued)

OTHER PUBLICATIONS

Advertisement (Mumme's Inc.) (1 page), Texas Deer Association Tracks, Vol. 6, Issue 3 (May/Jun. 2005), p. 51.

(Continued)

Primary Examiner—Susan Moon Lee
(74) *Attorney, Agent, or Firm*—Gardere Wynne Sewell, LLP

(57) **CLAIM**

The ornamental design for a fawn feeder, as shown and described.

DESCRIPTION

FIG. **1** is a perspective view of a fawn feeder according to my new design;

FIG. **2** is a left side elevation view of the fawn feeder shown in FIG. **1**;

FIG. **3** is a right side elevation view of the fawn feeder shown in FIG. **1**;

FIG. **4** is a front elevation view of the fawn feeder shown in FIG. **1**;

FIG. **5** is a rear elevation view of the fawn feeder shown in FIG. **1**;

FIG. **6** is a top plan view of the fawn feeder shown in FIG. **1**; and,

FIG. **7** is a bottom plan view of the fawn feeder shown in FIG. **1**.

The broken lines are for illustrative purposes only and form no part of the claimed design.

The stem pipe is shown in a broken away style for ease of illustration since the stem pipe's length is not fixed.

1 Claim, 7 Drawing Sheets

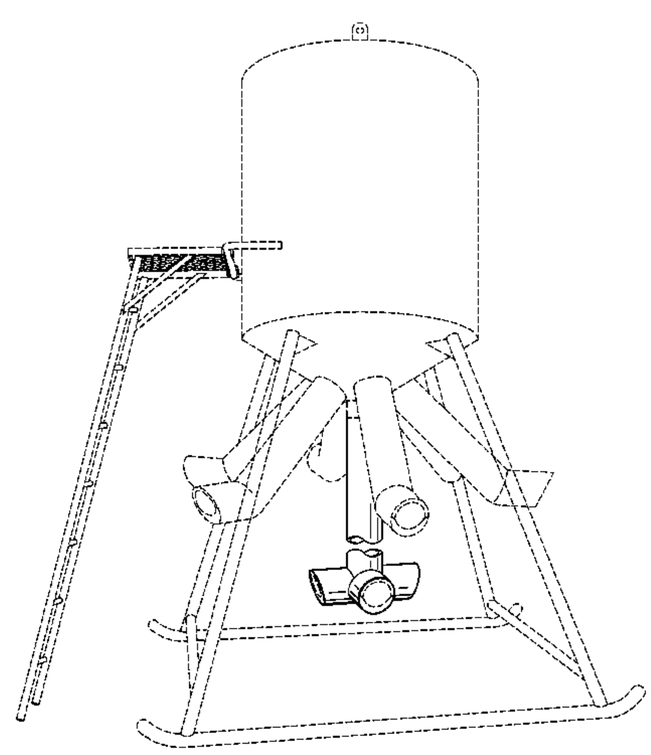

U.S. PATENT DOCUMENTS

1,355,399 A 10/1920 Kelley
1,359,691 A 11/1920 Genuit
1,561,299 A 11/1925 Banks
1,563,816 A 12/1925 Worthington
D77,948 S 3/1929 Evans
D92,312 S 5/1934 Kanter
2,136,956 A * 11/1938 Schmitt 119/14.54
D130,381 S 11/1941 Roth
2,454,721 A 11/1948 Severance et al
D152,655 S 2/1949 Rossell
2,464,278 A 3/1949 Wilson
D161,749 S 1/1951 Griner
D163,955 S 7/1951 McCartney
2,583,203 A 1/1952 Bergeron
2,619,252 A 11/1952 De Hoffmann
2,638,871 A 5/1953 Ruedemann
2,654,346 A 10/1953 Goff
D171,639 S 3/1954 Clemens
2,756,032 A 7/1956 Dowell
2,760,807 A 8/1956 Watson
2,761,597 A 9/1956 Stukey
2,808,029 A 10/1957 Geerling
2,881,947 A 4/1959 Hancock
2,886,002 A 5/1959 O'Malley et al.
D187,929 S 5/1960 Rensch
2,988,047 A 6/1961 Hurdle
3,007,618 A 11/1961 Davis
3,034,480 A 5/1962 French
D194,594 S 2/1963 Juculano
3,104,778 A 9/1963 Leonard
3,128,560 A 4/1964 McKenzie
3,131,511 A 5/1964 Deaner
3,318,473 A 5/1967 Jones
3,386,756 A * 6/1968 Primm 285/197
3,487,433 A 12/1969 Fleming
3,515,098 A 6/1970 Thurmond
3,613,641 A 10/1971 Geerlings
3,636,983 A 1/1972 Keyser
3,655,011 A 4/1972 Willett
3,658,211 A 4/1972 Kitchens
D226,507 S 3/1973 Wright
3,720,235 A 3/1973 Schrock
3,730,142 A 5/1973 Kahrs et al.
3,780,701 A 12/1973 Wentworth, Sr.
D232,552 S 8/1974 Wtson
3,856,315 A 12/1974 Stansbury
3,873,391 A * 3/1975 Plauka et al. 156/258
D237,001 S 9/1975 Von Serda
3,902,460 A 9/1975 Franklin
3,977,045 A 8/1976 Saurenman
D242,933 S 1/1977 Brubaker et al.
D243,559 S 3/1977 Hoyle et al.
D244,857 S 6/1977 Hayes
D245,048 S 7/1977 Pool
D245,368 S 8/1977 Mueller
D246,603 S 12/1977 Frost
4,163,474 A 8/1979 MacDonald et al.
D256,623 S 8/1980 Lockwood
D258,012 S 1/1981 Murphy
D258,013 S 1/1981 Murphy
4,256,054 A 3/1981 Hitchcock
4,291,809 A 9/1981 Lyon
D262,144 S 12/1981 Sher
D262,408 S 12/1981 Whaling
4,328,880 A 5/1982 Lapeyre
4,337,728 A 7/1982 Van Gilst et al.
4,358,205 A 11/1982 Eakins
4,397,304 A 8/1983 Villain
D271,090 S 10/1983 Edgar et al.
D271,963 S 12/1983 Perkins
D273,715 S 5/1984 Sher
D275,228 S 8/1984 Nishigaki
4,508,303 A 4/1985 Beckerer, Jr.
D279,717 S 7/1985 Mau et al.
4,538,548 A 9/1985 Page
4,542,930 A 9/1985 Adams
4,580,528 A 4/1986 Kendall
4,601,414 A 7/1986 Lawson
4,608,046 A 8/1986 Towfigh
4,621,737 A 11/1986 Casey
H000176 H * 12/1986 Johnstone, Jr. 285/31
D288,608 S 3/1987 Dahlberg
4,653,195 A 3/1987 Esparza
4,707,389 A 11/1987 Ward
4,719,875 A 1/1988 Van Gilst
D295,091 S 4/1988 Swartzendruber
4,815,621 A 3/1989 Bartis
4,859,423 A 8/1989 Perlman
D305,193 S 12/1989 Sajadieh
D305,804 S 1/1990 Browning et al.
4,956,821 A 9/1990 Fenelon
4,971,366 A * 11/1990 Towsley 285/12
4,986,220 A 1/1991 Reneau et al.
4,997,284 A 3/1991 Tousignant et al.
D319,759 S 9/1991 Bookout
D319,794 S 9/1991 Elkins
5,061,180 A 10/1991 Wiele
5,069,164 A 12/1991 Wiwi
5,086,730 A 2/1992 Figley
5,090,743 A * 2/1992 Obering 285/133.21
D326,741 S 6/1992 Powers
5,130,496 A 7/1992 Jenkins
5,143,289 A 9/1992 Gresham et al.
5,183,298 A * 2/1993 Harrington 285/12
D333,841 S 3/1993 Henricksen
5,195,459 A 3/1993 Ancketill
D336,554 S 6/1993 Reeder
5,218,784 A 6/1993 Pollock
D340,516 S 10/1993 Too
5,273,454 A 12/1993 Shotey
5,275,131 A 1/1994 Brake et al.
5,333,572 A 8/1994 Nutt
5,339,996 A 8/1994 Dubbert et al.
5,372,093 A 12/1994 Pooshs
5,405,047 A 4/1995 Hansen
5,410,986 A 5/1995 Washam
5,435,267 A 7/1995 Patterson
5,450,677 A 9/1995 Casey
5,464,257 A * 11/1995 Riddles et al. 285/133.21
D367,093 S * 2/1996 Weir D21/728
5,503,090 A 4/1996 Guzan
D371,228 S 6/1996 Monin
5,533,646 A 7/1996 Dildine
5,544,764 A 8/1996 Cima
D373,659 S 9/1996 Miller
D375,159 S 10/1996 Johansson
5,570,547 A 11/1996 Webb et al.
D382,748 S 8/1997 Riskey
5,655,671 A 8/1997 Barry et al.
5,662,630 A 9/1997 Raynie
5,666,260 A 9/1997 Pasmanik et al.
D386,137 S 11/1997 Bailey
5,699,753 A 12/1997 Aldridge, III
5,730,302 A 3/1998 Groene
5,740,757 A 4/1998 Smeester
D394,178 S 5/1998 Gremchuck
5,753,158 A 5/1998 Orsing
D397,527 S 8/1998 Bruder et al.
5,794,561 A 8/1998 Schulz
D401,016 S 11/1998 Holliday
5,862,777 A 1/1999 Sweeney
5,876,282 A 3/1999 Kenny
5,901,497 A 5/1999 Bulvin
5,901,886 A 5/1999 Grindstaff et al.

5,906,174	A	5/1999	Muldoon
5,934,222	A	8/1999	Hwang
5,979,717	A	11/1999	Dalton et al.
D417,614	S	12/1999	Chu
D420,316	S	2/2000	Hanlon et al.
D421,650	S	3/2000	Liao
D421,821	S	3/2000	Kinjerski
D423,436	S	4/2000	Larson
D426,734	S	6/2000	Fuchs
6,073,587	A	6/2000	Hill et al.
6,082,300	A	7/2000	Futch
6,142,100	A	11/2000	Marchioro
D436,861	S	1/2001	Sagel et al.
6,199,509	B1	3/2001	Mostyn et al.
D445,062	S	7/2001	Wong
D445,170	S	7/2001	Speicher
6,283,159	B1	9/2001	Tada
D450,456	S	11/2001	Warren, III
6,328,184	B1	12/2001	Krol
6,329,602	B1	12/2001	Ushiyama et al.
6,364,125	B1	4/2002	D'Angelo
D458,201	S	6/2002	Warren
D460,726	S	7/2002	Campbell et al.
6,435,134	B1	8/2002	Ho
6,439,158	B1	8/2002	Blohm
D464,875	S	10/2002	Koppang
D466,809	S	12/2002	Sagel
6,488,511	B1	12/2002	Stewart
6,510,813	B1	1/2003	Boone, Jr.
D469,926	S	2/2003	Petruccelli
D476,451	S	6/2003	Morgan, Sr.
6,591,990	B2	7/2003	Lanman et al.
6,622,653	B1	9/2003	Starnes, Jr.
6,637,595	B1	10/2003	Frossard et al.
D486,946	S	2/2004	Castro
D487,170	S	2/2004	Petruccelli
6,691,640	B1	2/2004	Huckabee
D488,889	S	4/2004	Walsh
D490,352	S	5/2004	Ward
6,763,781	B1	7/2004	Norrell
D494,384	S	8/2004	Chandaria
D495,186	S	8/2004	Poupel et al.
6,786,180	B1	9/2004	Cheng
D504,309	S	4/2005	Fuchs
6,904,690	B2	6/2005	Bakke et al.
6,920,841	B2	7/2005	Meritt
6,959,664	B1	11/2005	Keuter et al.
D520,423	S	5/2006	Poole
7,059,355	B2	6/2006	Otani et al.
D525,657	S	7/2006	Warren, III
D528,488	S	9/2006	Webb
7,143,721	B2	12/2006	Robbins
D534,469	S	1/2007	Murkett
7,165,796	B1	1/2007	Hung
D540,231	S	4/2007	Braun et al.
7,204,201	B2	4/2007	Leombruno
D541,718	S	5/2007	Emler
D542,533	S	5/2007	Yang
D543,666	S	5/2007	Ross et al.
7,214,028	B2	5/2007	Boasso et al.
D545,742	S	7/2007	Kinoshita
D548,589	S	8/2007	Blasko et al.
D548,890	S	8/2007	Chen
D549,313	S	8/2007	Kelnhofer
D551,965	S	10/2007	Blasko et al.
D558,111	S	12/2007	Banks, III
7,302,912	B2	12/2007	Boyer
7,311,223	B2	12/2007	Post
D559,470	S	1/2008	Stevens et al.
D562,557	S	2/2008	Lewis
7,370,605	B2	5/2008	Meritt
D574,309	S	8/2008	Unfried et al.
D574,932	S	8/2008	Zhuang
D575,556	S	8/2008	Rohkar, Jr.
D575,908	S	8/2008	Meritt
7,475,796	B2	1/2009	Garton
D587,366	S	2/2009	Turkat
D588,166	S	3/2009	Lyons, III
D598,354	S	8/2009	Nakazawa et al.
D598,602	S *	8/2009	Laarman D26/84
D599,503	S	9/2009	Meritt
D602,647	S	10/2009	Polstein et al.
D603,104	S	10/2009	Meritt
D603,105	S	10/2009	Meritt
D603,566	S	11/2009	Meritt
D604,017	S	11/2009	Meritt
2002/0134850	A1	9/2002	Hollenberg
2005/0224126	A1	10/2005	Otani et al.
2005/0229860	A1	10/2005	Meritt
2005/0269367	A1	12/2005	Post
2006/0048712	A1	3/2006	Boyer
2006/0060148	A1	3/2006	Boyer
2006/0283396	A1	12/2006	Hernandez
2007/0028844	A1	2/2007	Bodenstab et al.
2008/0178815	A1	7/2008	Meritt
2008/0178816	A1	7/2008	Meritt

FOREIGN PATENT DOCUMENTS

GB	2193782 A	2/1988

OTHER PUBLICATIONS

Advertisement (Mumme's Inc.) (1 page), The Journal of the Texas Trophy Hunters Association, Jan./Feb. 2005, on reverse side of p. 74.

Advertisement (Sweeney Automated Feeding Systems) (2 pages, front and back) (date referenced Jan. 1-Feb. 28, 2005).

Internet web site (Atascosa Wildlife Supply) (2 pages); http://www.atascosawildlifesupply.com/feeders.html (Mar. 8, 2005).

Advertisement (Atascosa Wildlife Supply) (2 pages); The Journal of the Texas Trophy Hunters Association, May/Jun. 2005 (reverse sides of pp. 23 and 26).

Advertisement (Texas Wildlife Supply) (1 page), The Journal of the Texas Trophy Hunters Association, May/Jun. 2005 (reverse side of p. 174).

Internet web site (American Hunter Outdoor Products) (15 pages); http://www.americanhunterfeeders.com (Feb. 24, 2005).

Internet web site (Mumme's Inc.) (1 page); http://www.mummesinc.com (Feb. 24, 2005).

Internet web site (Boss Game Systems) (3 pages); http://www.bossgamesystems.com (Oct. 6, 2005).

Advertisement (American Hunter Outdoor Products) (1 page), The Journal of the Texas Trophy Hunters Association, May/Jun. 2005, on reverse side of p. 155.

"Introduction to Welding," Materials Engineering Group.; Copyright 1997 Materials Engineering (UK) Ltd.; ttp://www.meg.co.uk/meg/app01.htm.

"Welding," Microsoft Encarta Online Encyclopedia 2002; http://encarta.msn.com (1997-2002) Microsoft Corporation.

"Fair Special, 2000# Capacity Gravity Flow Protein Feeder," and Photo, Sycamore Springs Ranch, Approximately Oct. 2005.

Advertisement (Rick Meritt; Outback Wildlife Feeders); The Journal of the Texas Trophy Hunters, Sep./Oct. 2007, Vol. 32, No. 5 (3pp).

Advertisement (Rick Meritt; Outback Wildlife Feeders); The Journal of the Texas Trophy Hunters, Jul./Aug. 2006, Vol. 31, No. 4 (3pp).

Advertisement (Rick Meritt; Outback Wildlife Feeders); The Journal of the Texas Trophy Hunters, Sep./Oct. 2005, Vol. 30, No. 5 (3pp).

Advertisement (Rick Meritt; Outback Wildlife Feeders); The Journal of the Texas Trophy Hunters, Sep./Oct. 2001, Vol. 26, No. 5 (2pp).

Advertisement (Rick Meritt; Outback Wildlife Feeders); The Journal of the Texas Trophy Hunters, Sep./Oct. 2002, Vol. 27, No. 5 (2pp).

Advertisement (Rick Meritt; Outback Wildlife Feeders); The Journal of the Texas Trophy Hunters, Sep./Oct. 2003, Vol. 28, No. 5 (2pp).

Advertisement (Rick Meritt; Outback Wildlife Feeders); The Journal of the Texas Trophy Hunters, Sep./Oct. 2004, Vol. 29, No. 5 (2pp).

* cited by examiner

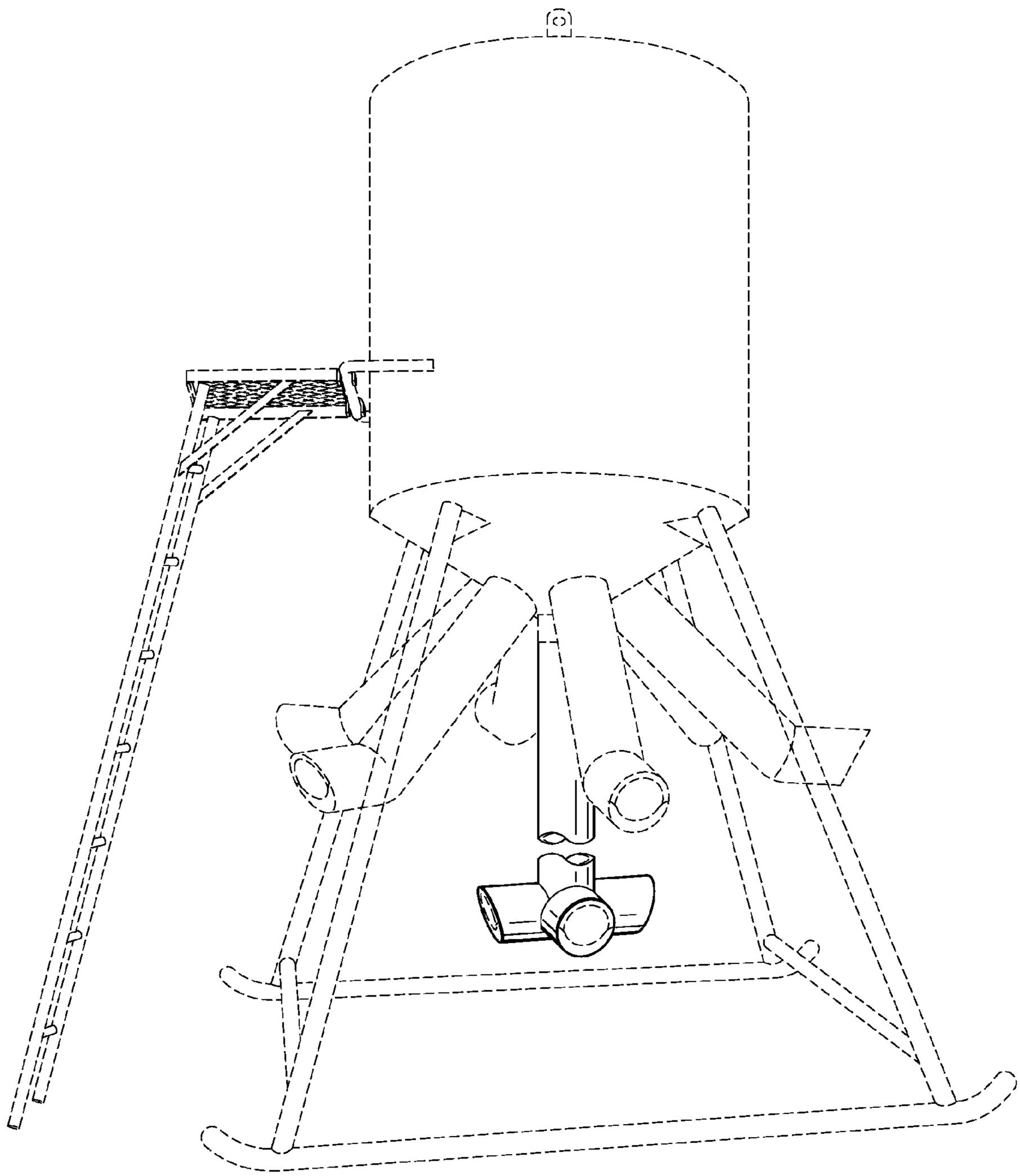

FIG. 1

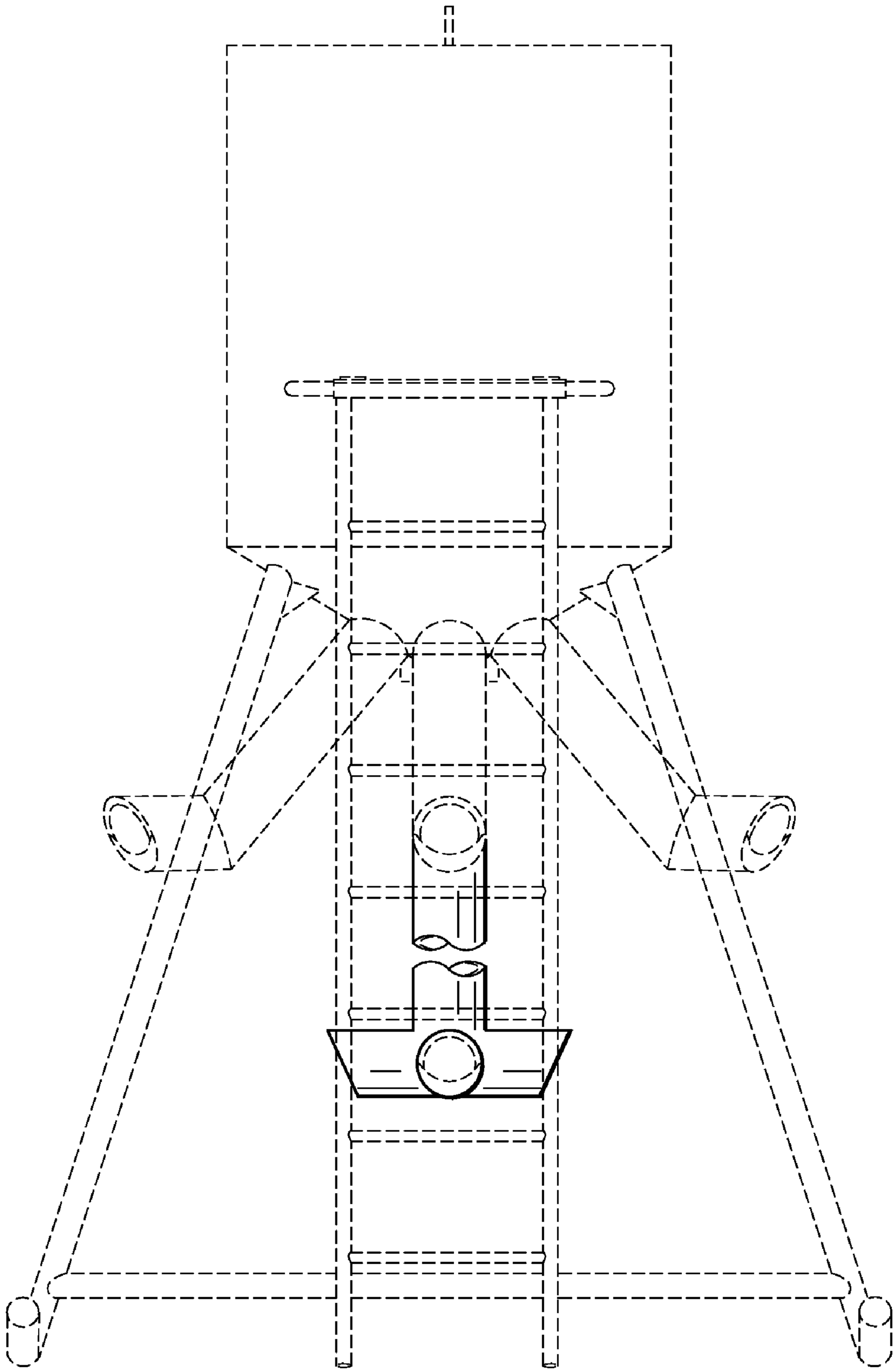

FIG. 2

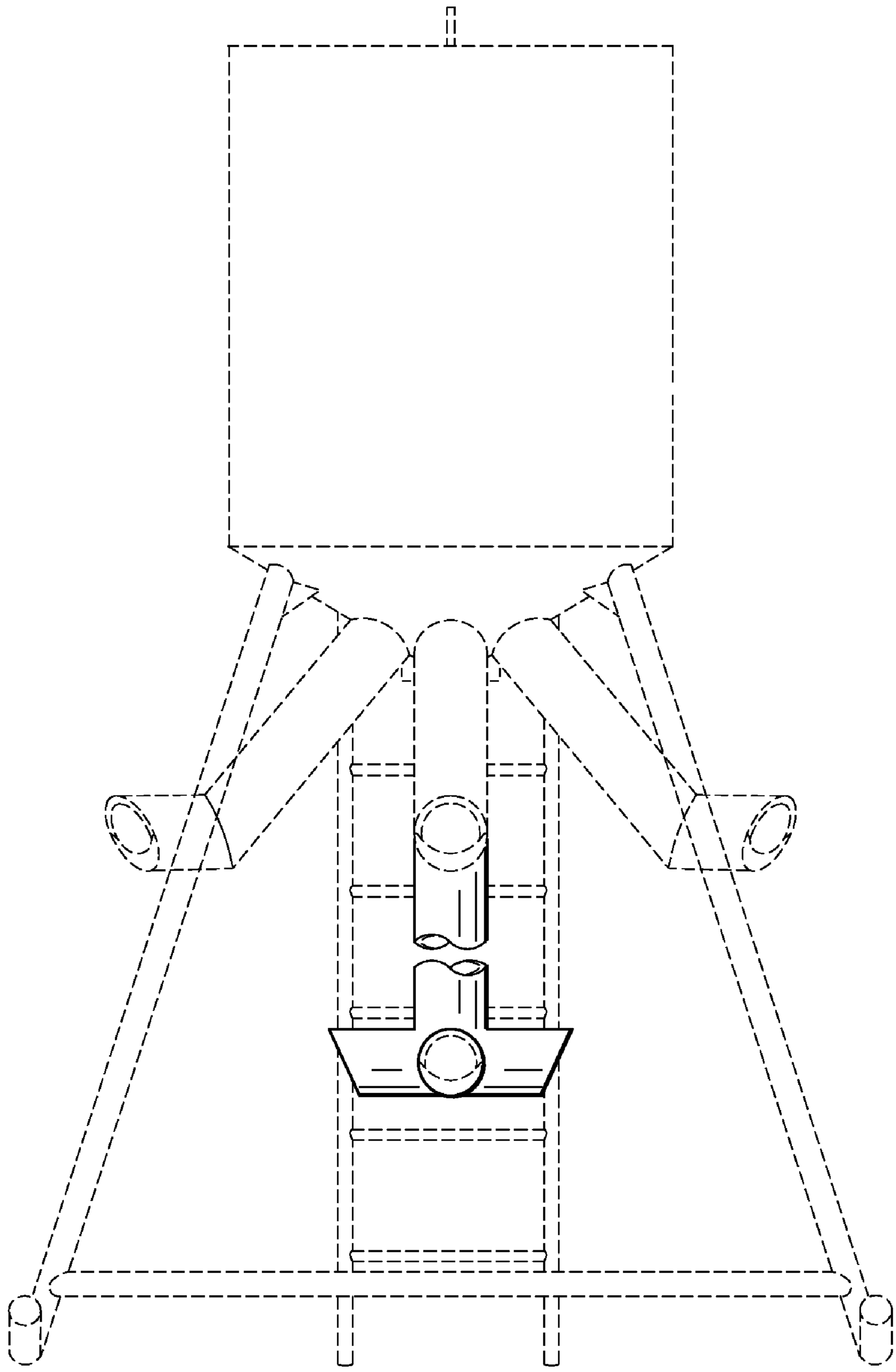

FIG. 3

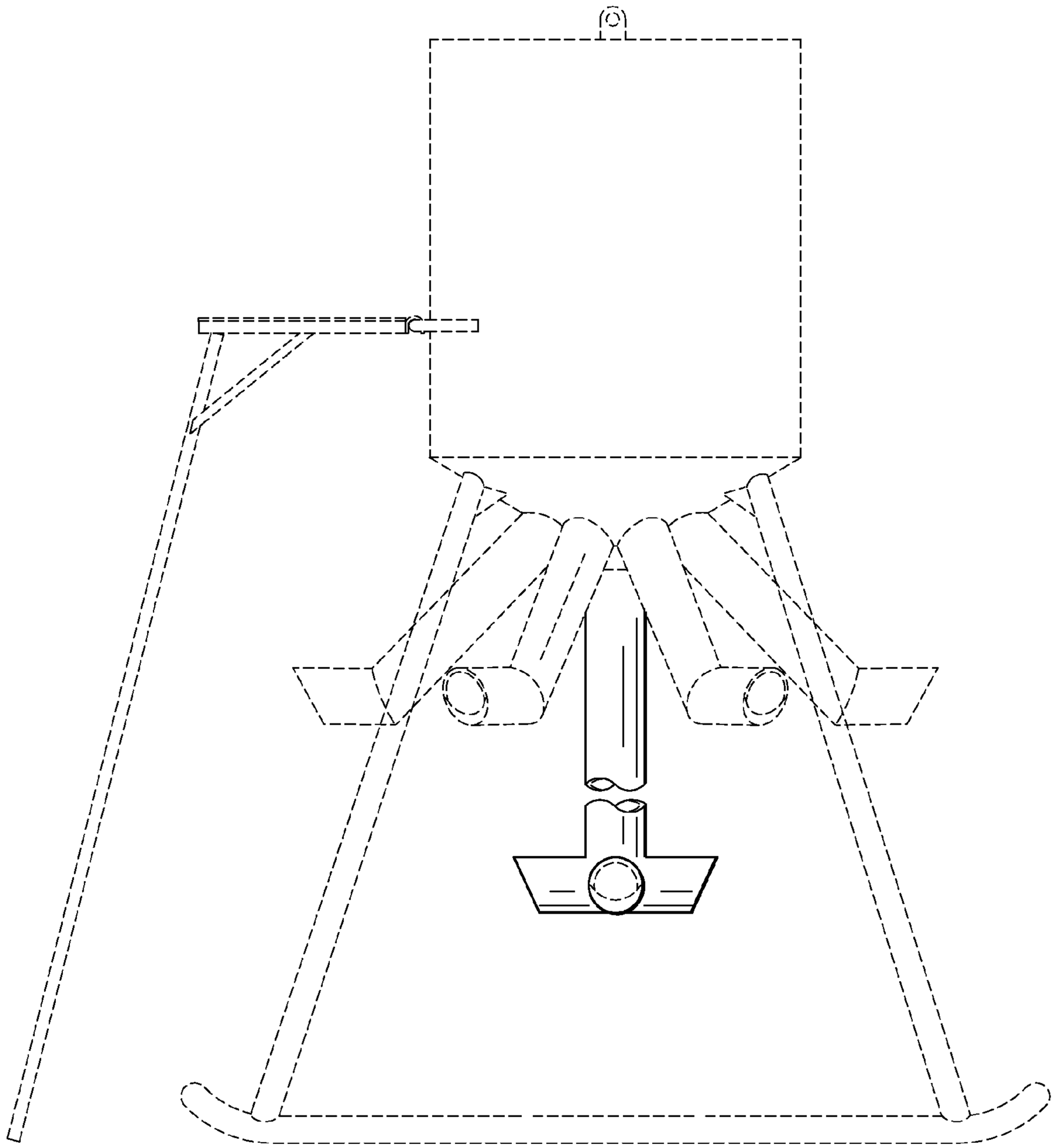

FIG. 4

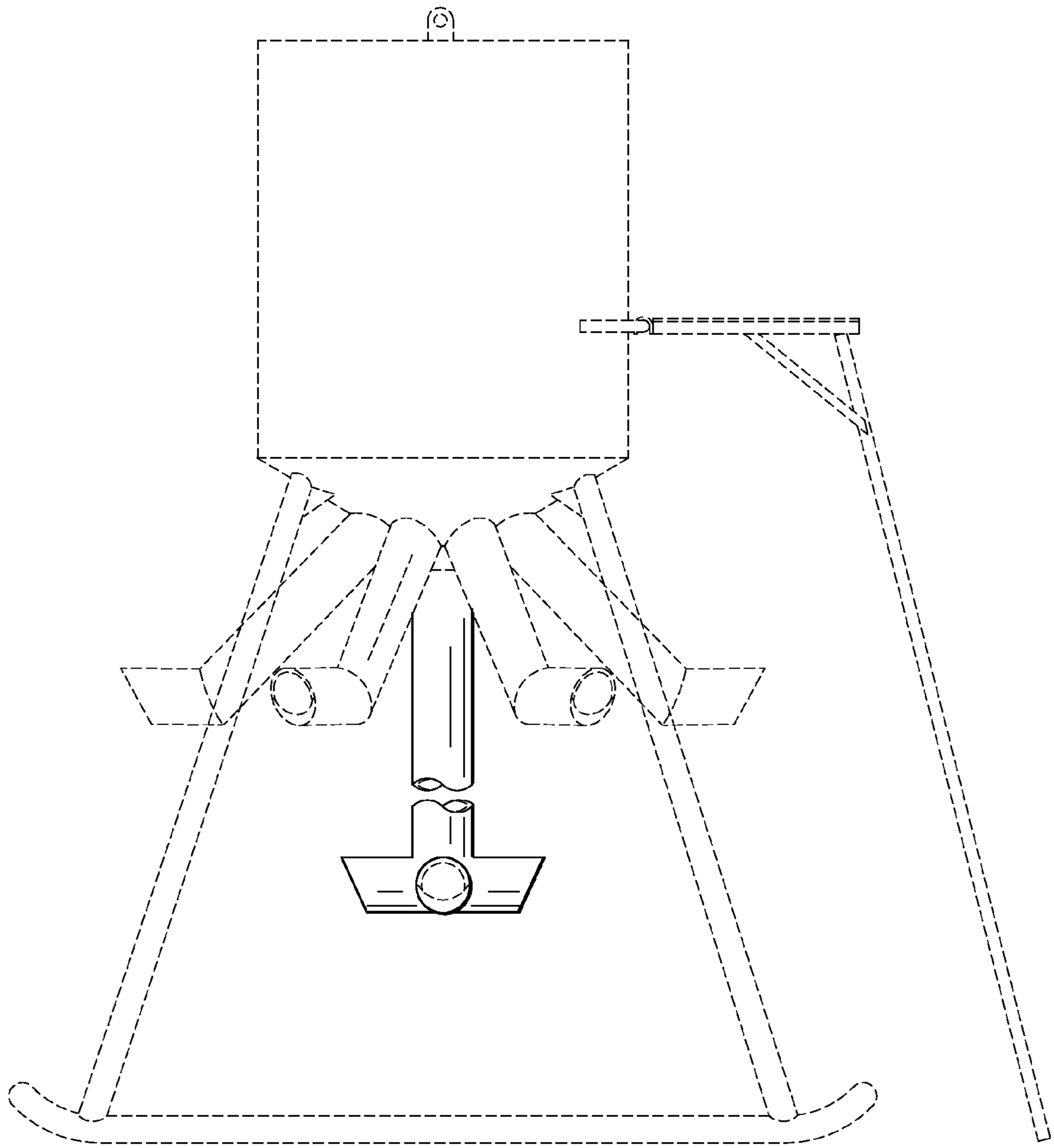

FIG. 5

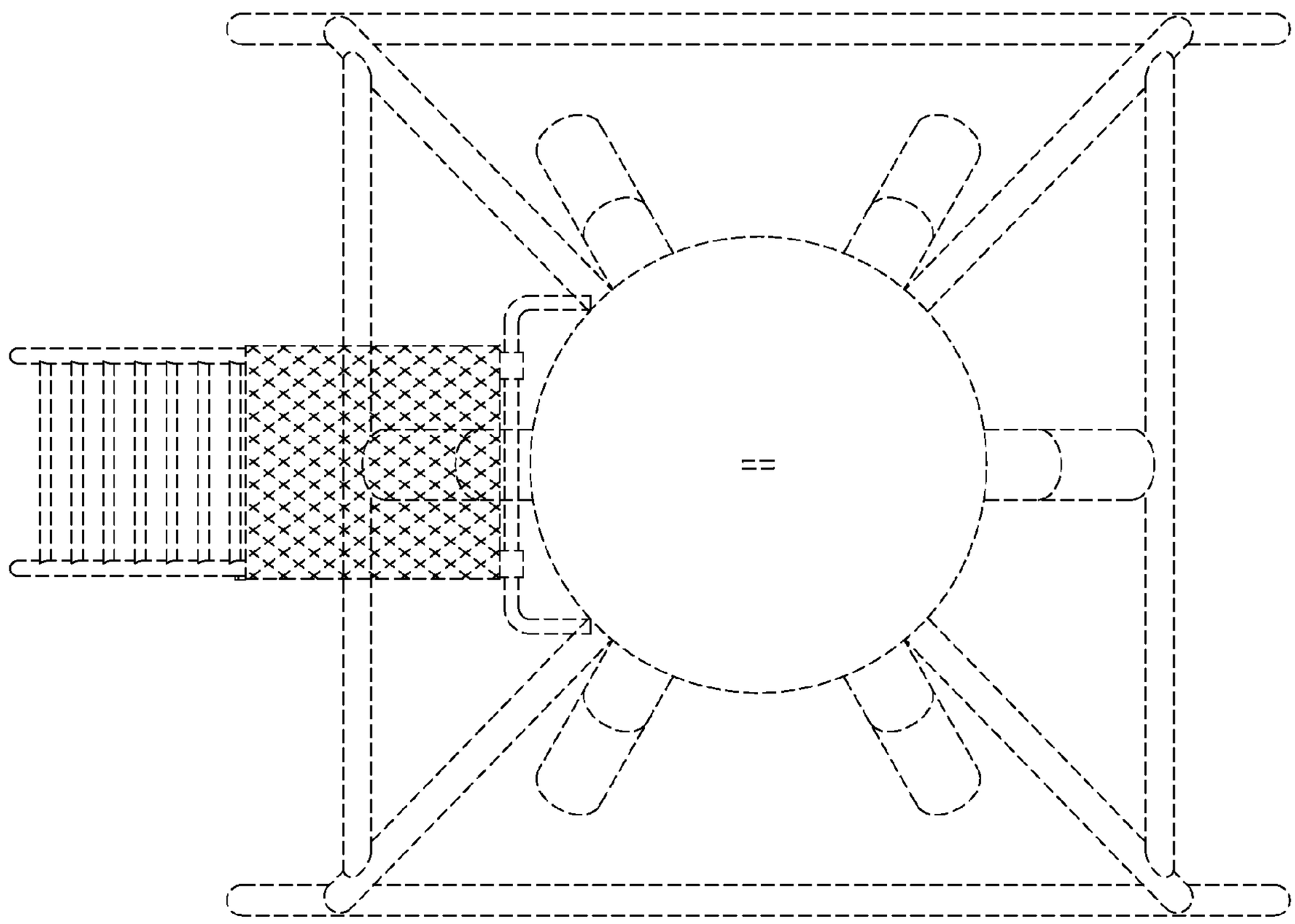

FIG. 6

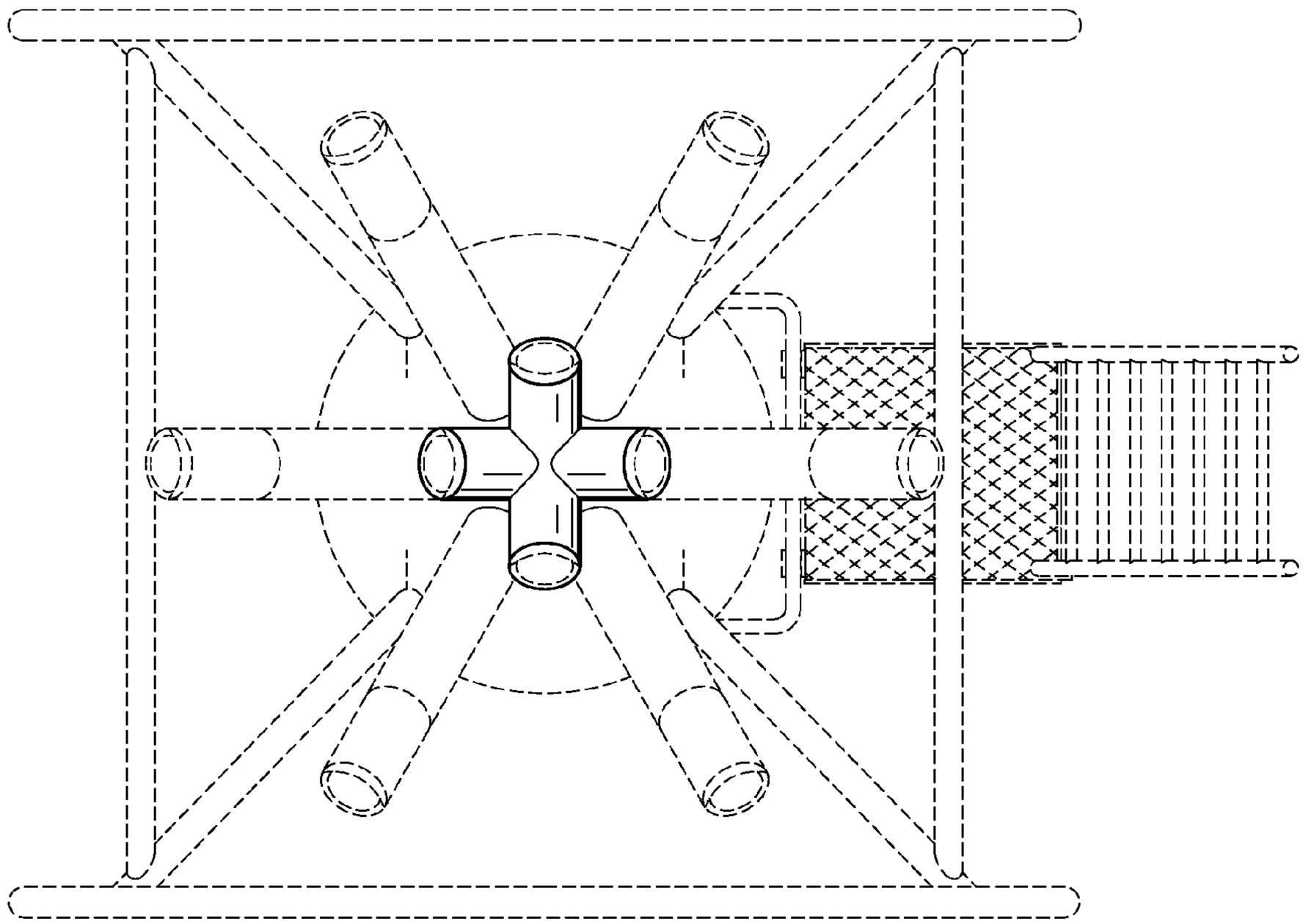

FIG. 7