US00D622780S

(12) United States Design Patent

Lesley et al.

(10) Patent No.: US D622,780 S
(45) Date of Patent: ** Aug. 31, 2010

(54) **GAMING MACHINE WITH CURVED SIDE PROFILE**

(75) Inventors: **Paul M. Lesley**, Blue Island, IL (US); **William C. Cesaroni**, Glenview, IL (US); **Morad Ghassemian**, Oak Park, IL (US); **Christian J. Kulujian**, Chicago, IL (US)

(73) Assignee: **WMS Gaming Inc.**, Waukegan, IL (US)

(**) Term: **14 Years**

(21) Appl. No.: **29/327,686**

(22) Filed: **Nov. 11, 2008**

(51) **LOC (9) Cl.** **21-03**
(52) **U.S. Cl.** **D21/369**; D21/385
(58) **Field of Classification Search** D21/324–329, D21/369–370, 385; 273/309; 463/16–17, 463/46–47
See application file for complete search history.

(56) **References Cited**

U.S. PATENT DOCUMENTS

2,661,954	A	12/1953	Koci	463/57
D236,720	S	9/1975	Baker	D21/370
4,046,419	A	9/1977	Schmitt	297/153
D264,485	S	5/1982	Kitchen	D21/370
4,705,274	A	11/1987	Lubeck	273/148
4,840,343	A	6/1989	Gasser	248/500
4,960,117	A	10/1990	Moncrief et al.	463/46
D315,110	S	3/1991	Slater	D10/88
5,015,189	A	5/1991	Wenzinger et al.	434/63
5,083,738	A	1/1992	Infanti	248/500
5,102,192	A	4/1992	Barile	297/257
5,114,112	A	5/1992	Infanti	248/500
5,143,055	A	9/1992	Eakin	601/47
D333,164	S	2/1993	Kraft et al.	D21/325
5,195,746	A	3/1993	Boyd et al.	463/37
5,232,191	A	8/1993	Infanti	248/500
5,290,034	A	3/1994	Hineman	273/148
D351,869	S	10/1994	Rothschild et al.	D21/37
5,409,296	A	4/1995	Barlie	297/344.1

(Continued)

FOREIGN PATENT DOCUMENTS

EP 649 671 A1 4/1995

(Continued)

OTHER PUBLICATIONS

Product Sheet for "American Eagle", Eagle Co. Ltd., 2 pages, (1997).

(Continued)

Primary Examiner—Sandra Morris
(74) *Attorney, Agent, or Firm*—Nixon Peabody LLP

(57) **CLAIM**

We claim the ornamental design for a "gaming machine with curved side profile," as shown and described.

DESCRIPTION

FIG. **1** is a perspective view of a gaming machine with a curved side profile showing our new design.

FIG. **2** is a front view of the gaming machine shown in FIG. **1**.

FIG. **3** is a left-side view of the gaming machine shown in FIG. **1**.

FIG. **4** is a right-side view of the gaming machine shown in FIG. **1**; and,

FIG. **5** is a top view of the gaming machine shown in FIG. **1**.

The broken lines are only for illustrative purposes to show visible environmental structure and form no part of the claimed design.

1 Claim, 2 Drawing Sheets

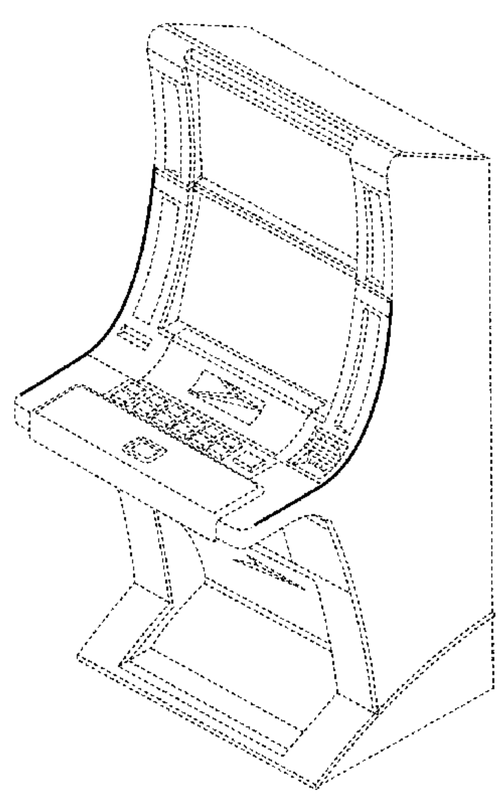

U.S. PATENT DOCUMENTS

5,411,257	A	5/1995	Fulton	273/85
5,437,453	A	8/1995	Hineman	273/148
5,472,197	A	12/1995	Gwiasda et al.	273/143 R
5,522,641	A	6/1996	Infanti	297/344.13
5,542,748	A	8/1996	Barlie	297/463.1
D376,391	S	12/1996	Okumura	D21/326
D380,014	S	6/1997	Yang	D21/370
5,669,818	A	9/1997	Thorner et al.	463/30
5,678,886	A	10/1997	Infanti	297/217.3
5,762,617	A	6/1998	Infanti	601/49
5,791,731	A	8/1998	Infanti	297/217.3
5,820,460	A	10/1998	Fulton	463/13
D407,759	S	4/1999	Isetani et al.	D21/326
5,984,782	A	11/1999	Inoue	463/20
D419,201	S	1/2000	De Haas	D21/370
D419,606	S	1/2000	Toriyama	D21/325
6,047,963	A	4/2000	Pierce et al.	273/143 R
D424,122	S	5/2000	Dickenson et al.	D21/325
D428,062	S	7/2000	Hayashi	D21/325
6,089,663	A	7/2000	Hill	297/258.1
6,102,394	A	8/2000	Wurz et al.	273/138.2
6,117,010	A	9/2000	Cantebury	463/20
6,129,355	A	10/2000	Hahn et al.	273/142 R
6,135,562	A	10/2000	Infanti	297/440.2
6,155,925	A	12/2000	Giobbi et al.	463/20
6,159,098	A	12/2000	Slomiany et al.	463/25
D439,931	S	4/2001	Yamaguchi	D21/369
6,210,279	B1	4/2001	Dickinson	463/37
6,227,614	B1	5/2001	Rubin	297/172
6,227,970	B1	5/2001	Shimizu et al.	463/20
D443,313	S	6/2001	Brettschneider	D21/369
D446,252	S	8/2001	Yamaguchi	D21/325
6,283,546	B1	9/2001	Hill	297/271.1
6,290,229	B1	9/2001	Perez	273/148
D450,094	S	11/2001	Hedrick et al.	D21/369
6,334,612	B1	1/2002	Wurz et al.	273/143 R
6,354,660	B1	3/2002	Friedrich	297/217.1
D459,402	S	6/2002	Wurz et al.	D21/325
6,422,670	B1	7/2002	Hedrick et al.	312/223.1
6,422,941	B1	7/2002	Thorner et al.	463/30
D463,504	S	9/2002	Stephen	D21/325
D464,377	S	10/2002	Wurz et al.	D21/325
D466,160	S	11/2002	Hirato et al.	D21/325
D467,977	S	12/2002	Gatto et al.	D21/326
D468,364	S	1/2003	Beadell et al.	D21/325
6,530,842	B1	3/2003	Wells et al.	463/46
6,530,872	B2	3/2003	Freshland et al.	494/49
6,572,187	B2	6/2003	Laufer	297/217.1
6,589,114	B2	7/2003	Rose	463/20
6,609,972	B2	8/2003	Seelig	463/20
6,616,142	B2	9/2003	Adams	273/292
D483,075	S	12/2003	Kang	D21/326
6,715,756	B2	4/2004	Inoue	273/138
D493,843	S	8/2004	Jackson et al.	D21/327
D495,754	S	9/2004	Wurz et al.	D21/370
D495,755	S	9/2004	Wurz et al.	D21/370
D500,098	S	12/2004	Doi	D21/477
D508,268	S	8/2005	Hanchar et al.	D21/369
D508,269	S	8/2005	Wichinsky	D21/369
D508,719	S	8/2005	de Haas	D21/369
D508,961	S	8/2005	Gatto et al.	D21/369
D509,254	S	9/2005	Rasmussen et al.	D21/369
D512,105	S	11/2005	Chitrapongse et al.	D21/370
6,997,810	B2 *	2/2006	Cole	463/46
7,184,277	B2	2/2007	Beirne	361/807
D539,854	S	4/2007	Luciano et al.	D21/369
D563,481	S *	3/2008	Looks et al.	D21/370
D564,600	S	3/2008	Greenberg et al.	D21/370
D564,601	S	3/2008	Strahinic et al.	D21/370
D566,197	S	4/2008	Greenberg et al.	D21/370
7,503,849	B2	3/2009	Hornik et al.	463/20
2002/0041069	A1	4/2002	Steelman	273/138.1
2003/0122973	A1	7/2003	Huang	348/836
2004/0053662	A1	3/2004	Pacey	463/16
2005/0014547	A1	1/2005	Gomez et al.	463/16
2006/0079316	A1	4/2006	Flemming et al.	463/25
2008/0039213	A1 *	2/2008	Cornell et al.	463/46
2008/0051202	A1 *	2/2008	Lube	463/46

FOREIGN PATENT DOCUMENTS

JP	03210172 B2	2/1993

OTHER PUBLICATIONS

Product Sheet for "Monopoly Chairman of the Board™", WMS Gaming Inc. 2 pages (1999).
Product Sheet for "American Eagle", Eagle Co., Ltd., 2 pages (2000).
Product Sheet for "Survivor", WMS Gaming Inc., 4 pages, (2001).
Product Sheet for "ProSLOT®6000", Bally Gaming Systems, 4 pages, (2002).
Product Sheet for "EVO™ Hybrid", Bally Gaming Systems, 4 pages, (2002).
Product Sheet for "3RV™", WMS Gaming Inc., 2 pages, (2002 or earlier).
Product Sheet for "Miss America", AC Coin & Slot, 2 pages (2002 or earlier).

* cited by examiner

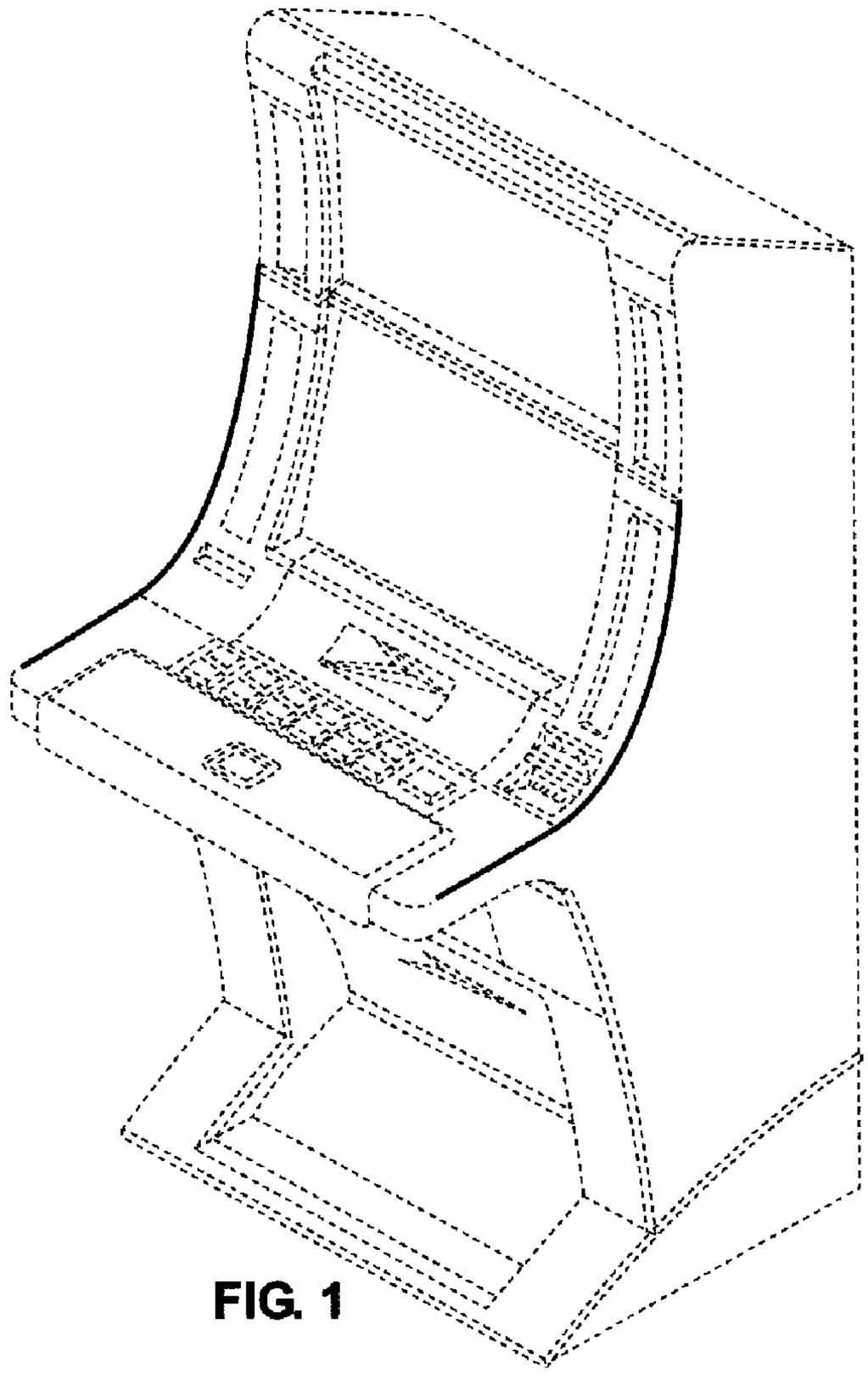

FIG. 1

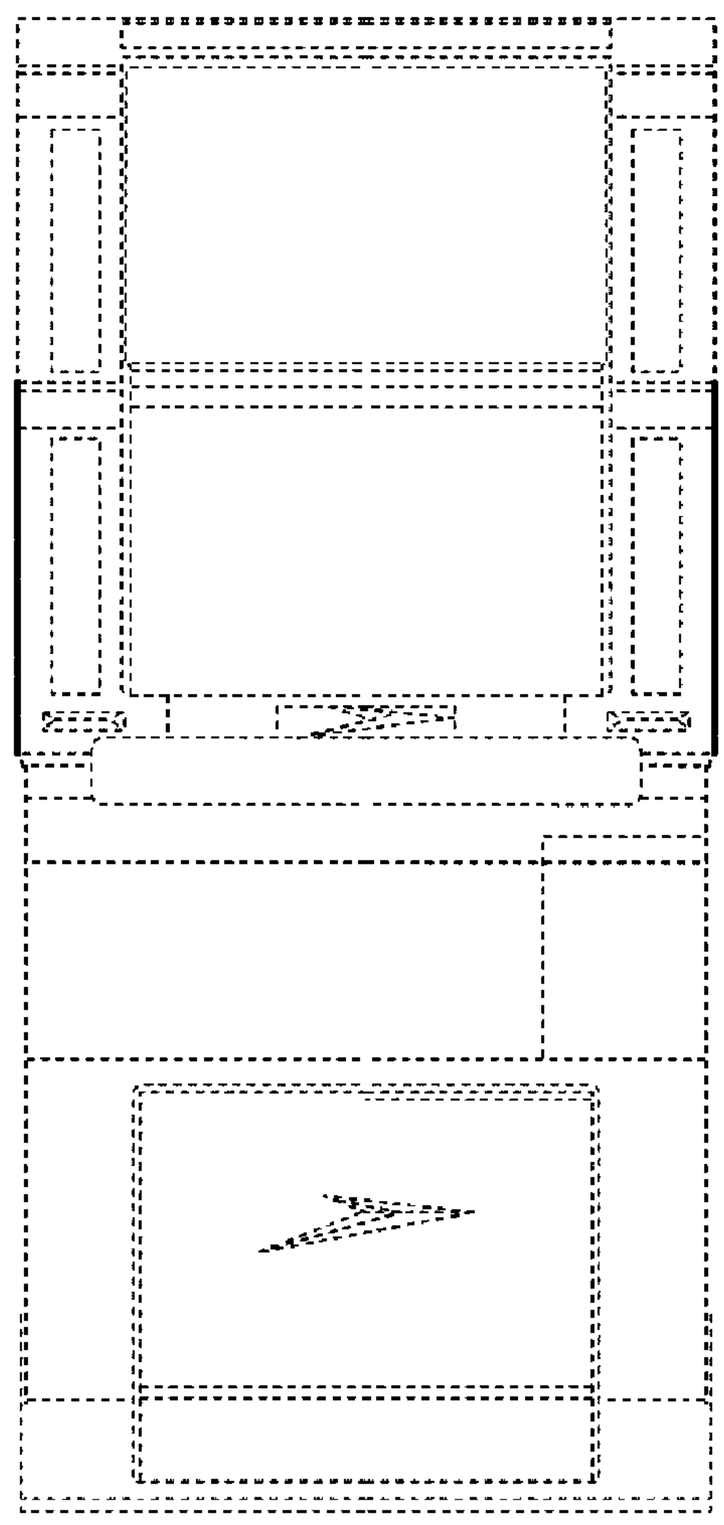

FIG. 2

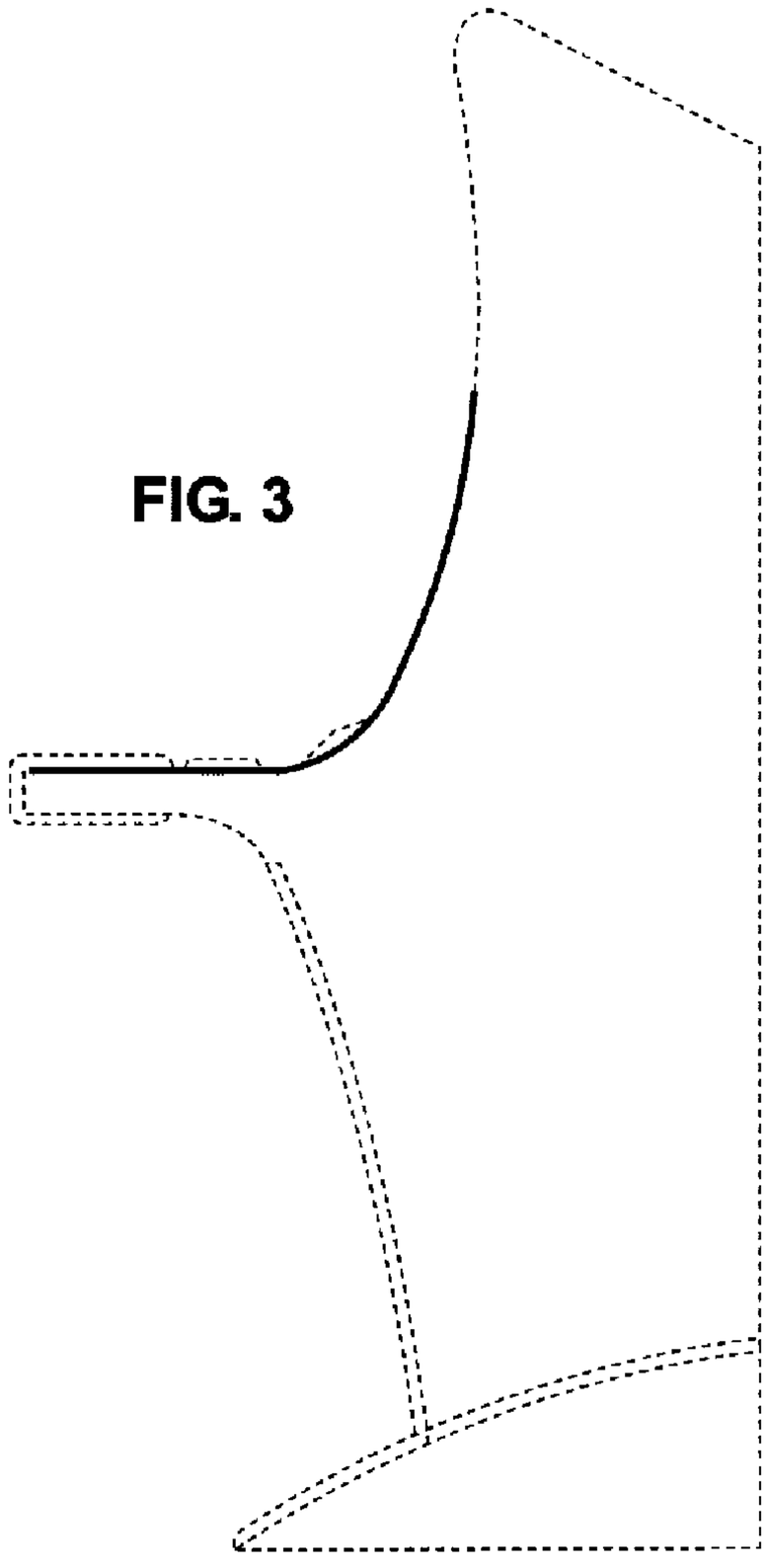

FIG. 3

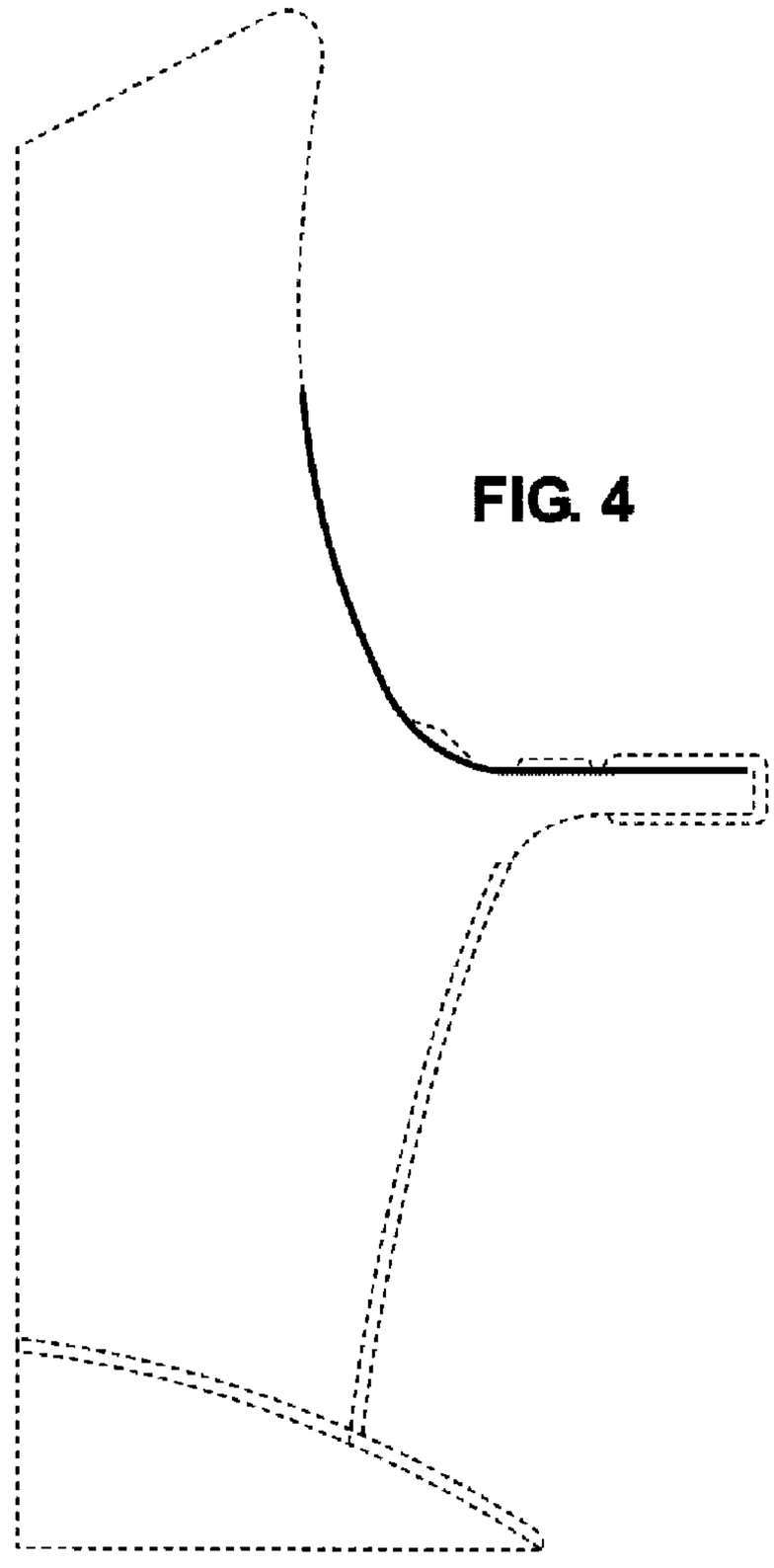

FIG. 4

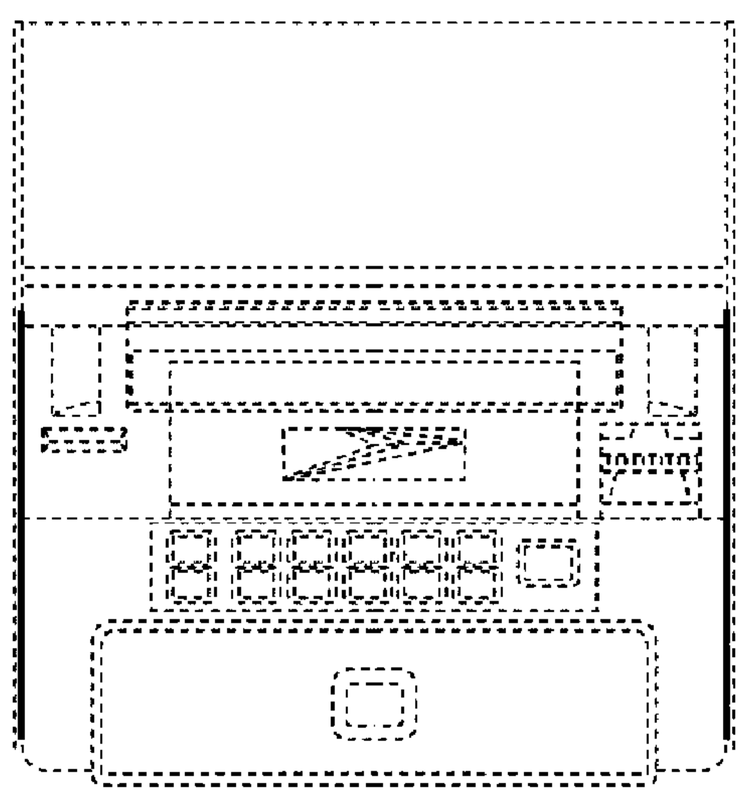

FIG. 5