US00D620285S

(12) United States Design Patent

Sculler et al.

(10) Patent No.: US D620,285 S
(45) Date of Patent: ** Jul. 27, 2010

(54) **AUDIO VIDEO SHELVING UNIT**

(75) Inventors: **Marc Sculler**, Colts Neck, NJ (US); **Robert Weitz**, Toms River, NJ (US)

(73) Assignee: **Bell'O International Corp.**, Morganville, NJ (US)

(**) Term: **14 Years**

(21) Appl. No.: **29/353,365**

(22) Filed: **Jan. 7, 2010**

(51) **LOC (9) Cl.** **06-04**
(52) **U.S. Cl.** **D6/477**
(58) **Field of Classification Search** D6/470, D6/471, 474, 477–479, 460–461, 468; 108/59, 108/91, 92, 96; 211/40, 41.12, 42, 49.1, 211/50, 85.2, 90.04, 187, 190; 206/307
See application file for complete search history.

(56) **References Cited**

U.S. PATENT DOCUMENTS

D363,626	S	*	10/1995	Herbst	D6/479
D371,472	S	*	7/1996	Herbst	D6/480
D378,175	S	*	2/1997	Hamami	D6/479
D405,630	S	*	2/1999	Wohlford	D6/479
D441,217	S	*	5/2001	Pepin et al.	D6/436
D454,731	S		3/2002	Niitsu et al.	
D458,053	S		6/2002	Luong	
D471,739	S	*	3/2003	de Carolis	D6/479
D472,073	S		3/2003	de Carolis	
D472,074	S		3/2003	de Carolis	
D472,075	S		3/2003	de Carolis	
D483,581	S	*	12/2003	Chang	D6/479
D489,548	S		5/2004	Malizia et al.	
D491,748	S		6/2004	deCarolis	
D491,749	S		6/2004	Malizia et al.	
D491,750	S		6/2004	Bertoncini et al.	
D491,753	S		6/2004	deCarolis	
D492,139	S	*	6/2004	McDiarmid	D6/479
D492,860	S		7/2004	Bertoncini et al.	
D493,982	S		8/2004	deCarolis	
D496,807	S		10/2004	deCarolis	
D497,060	S		10/2004	Chang et al.	
D497,061	S		10/2004	Decarolis	
D505,573	S		5/2005	Malizia	

(Continued)

OTHER PUBLICATIONS

Bell'O's 2005-2006 Product Catalog.

Primary Examiner—Elizabeth A Albert
Assistant Examiner—Kelley A Donnelly
(74) *Attorney, Agent, or Firm*—Lerner, David, Littenberg, Krumholz & Mentlik, LLP

(57) **CLAIM**

The ornamental design for audio video shelving unit, as shown and described.

DESCRIPTION

FIG. **1** is a front perspective view of a first embodiment of the audio video shelving unit;

FIG. **2** is a front elevational view thereof;

FIG. **3** is a rear elevational view thereof;

FIG. **4** is a right side view thereof (the left side being a mirror image of the right side view);

FIG. **5** is a top plan view thereof;

FIG. **6** is a front perspective view of a second embodiment of the audio video shelving unit; and,

FIG. **7** is a top plan view of the embodiment shown in FIG. **6** (all other views of the second embodiment having the same appearance as FIGS. **2**, **3** and **4**).

The broken lines are for environmental purposes only and form no part of the claimed design.

The stippled shading on the back bowed support panel of the "audio video shelving unit" is meant to indicate "surface texture."

1 Claim, 7 Drawing Sheets

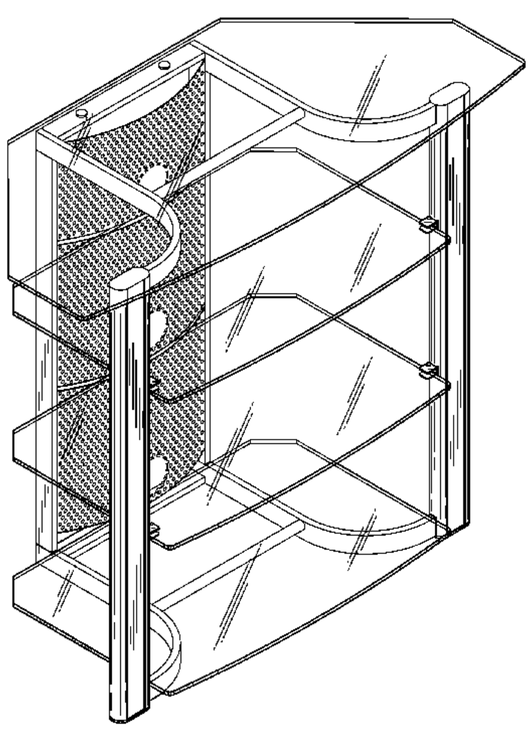

U.S. PATENT DOCUMENTS

D506,329 S 6/2005 Sexton
D507,433 S 7/2005 Portnoy
D507,900 S 8/2005 Sexton
D508,172 S 8/2005 Malizia et al.
D515,337 S 2/2006 deCarolis
D515,849 S 2/2006 Niu
D516,838 S 3/2006 Portnoy
D516,840 S 3/2006 deCarolis
D516,847 S 3/2006 Stenhouse et al.
D519,757 S 5/2006 Portnoy
D524,080 S * 7/2006 Stenhouse et al. D6/479
D525,052 S 7/2006 Malizia et al.
D525,054 S 7/2006 Stenhouse et al.
D527,208 S 8/2006 Malizia et al.
D535,497 S 1/2007 Portnoy
D537,656 S 3/2007 Stenhouse et al.
D542,059 S 5/2007 Moyle et al.
D543,729 S 6/2007 Weatherly
D549,991 S 9/2007 Stravitz
D554,393 S 11/2007 Yalif
D555,397 S 11/2007 Yalif
D559,583 S 1/2008 Zambelli
D559,584 S 1/2008 Zambelli
D560,077 S 1/2008 Zambelli
D562,593 S 2/2008 Zambelli
D564,260 S 3/2008 deCarolis
D564,261 S 3/2008 Sculler
D564,789 S 3/2008 deCarolis
D564,796 S 3/2008 Zambelli
D587,483 S 3/2009 Zambelli
D587,496 S 3/2009 Weitz
D587,497 S 3/2009 Zambelli
D589,280 S 3/2009 Zambelli
D590,636 S 4/2009 Ou Yang et al.
D590,637 S 4/2009 Portnoy
D592,428 S 5/2009 Zambelli
D594,248 S 6/2009 Zambelli
D595,978 S 7/2009 Portnoy et al.
D599,584 S 9/2009 Zambelli
D604,251 S 11/2009 Hwang
D605,874 S 12/2009 Zambelli
D609,501 S * 2/2010 Sexton D6/479

* cited by examiner

FIG. 1

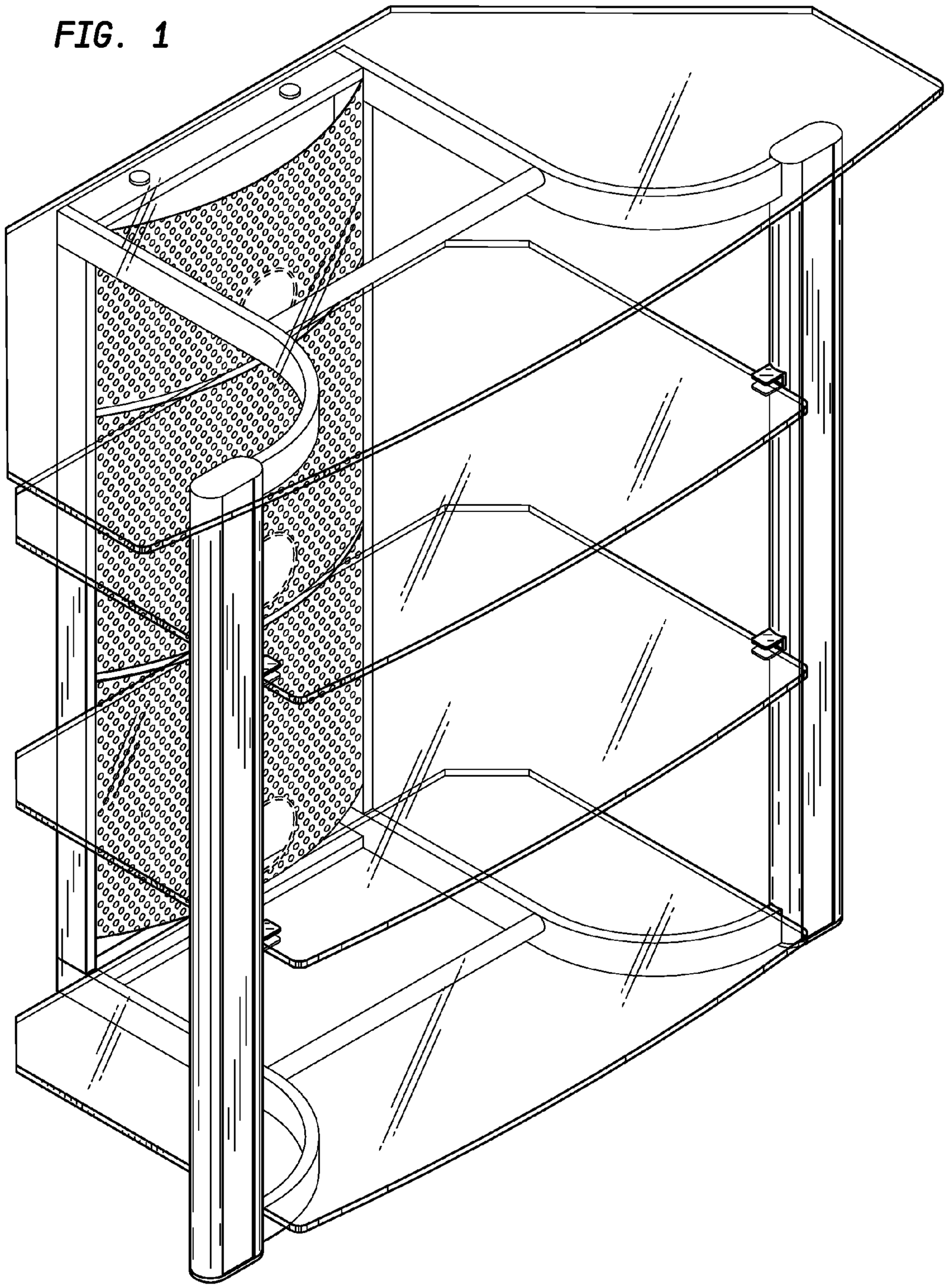

FIG. 2

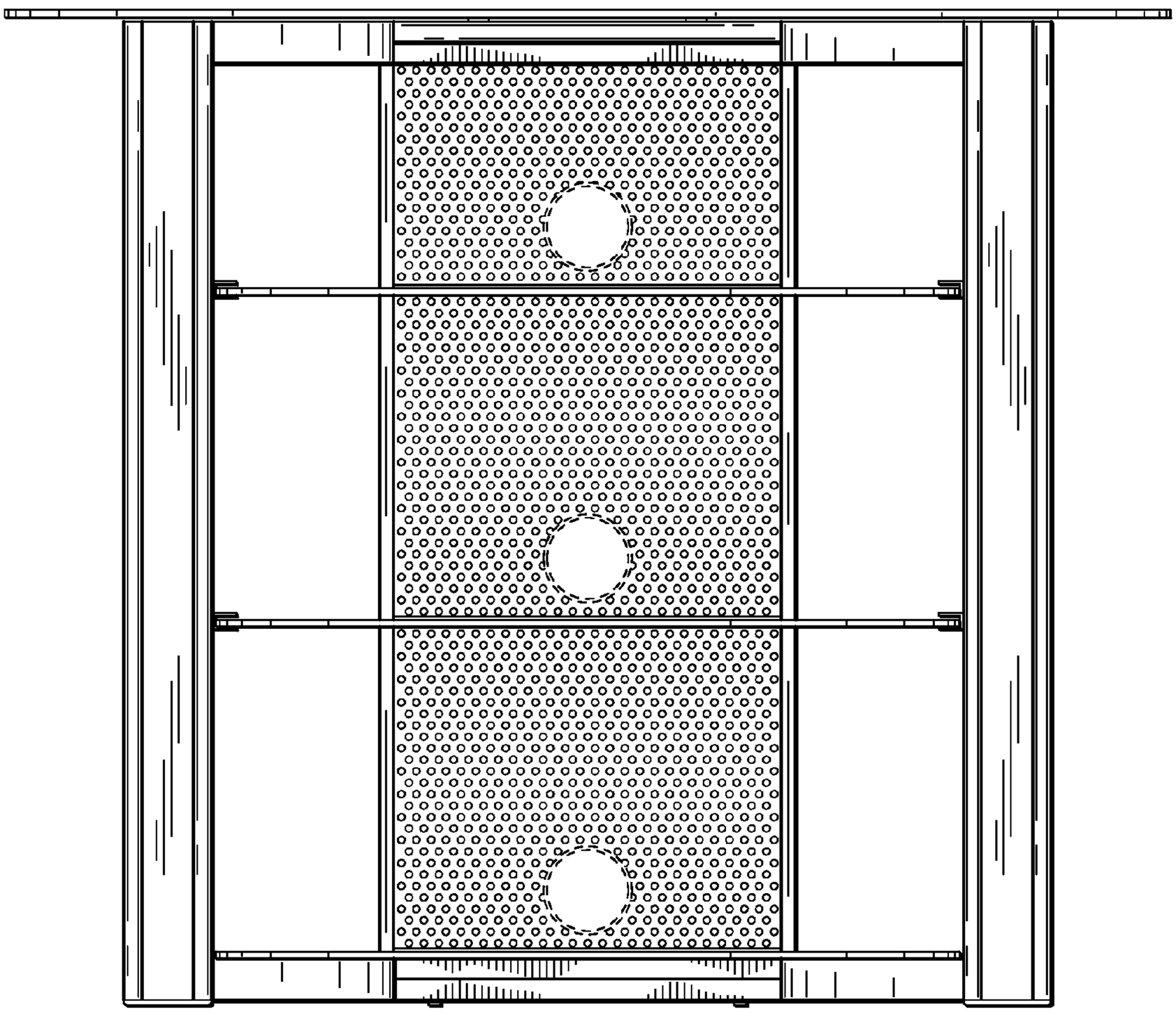

FIG. 3

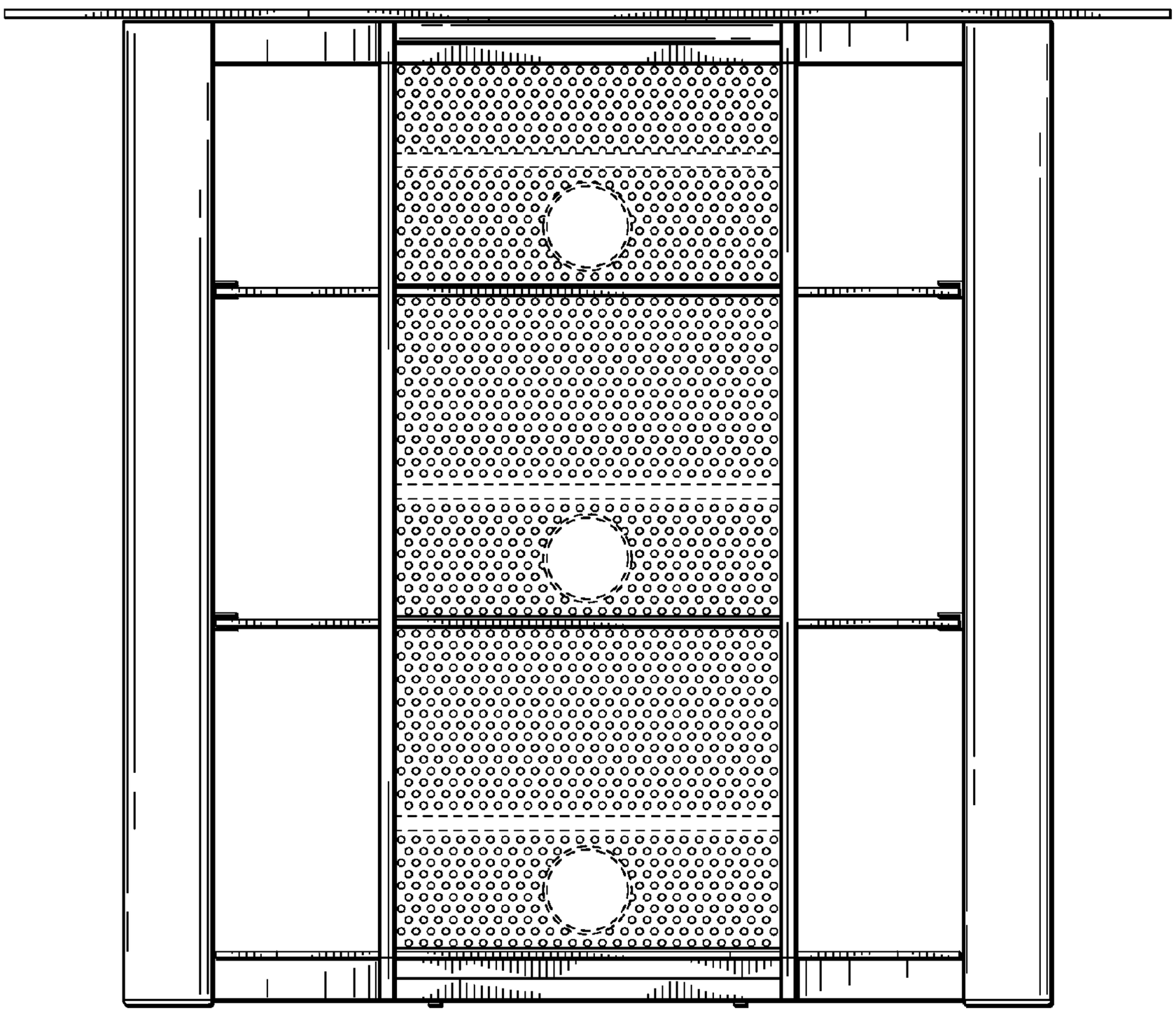

FIG. 4

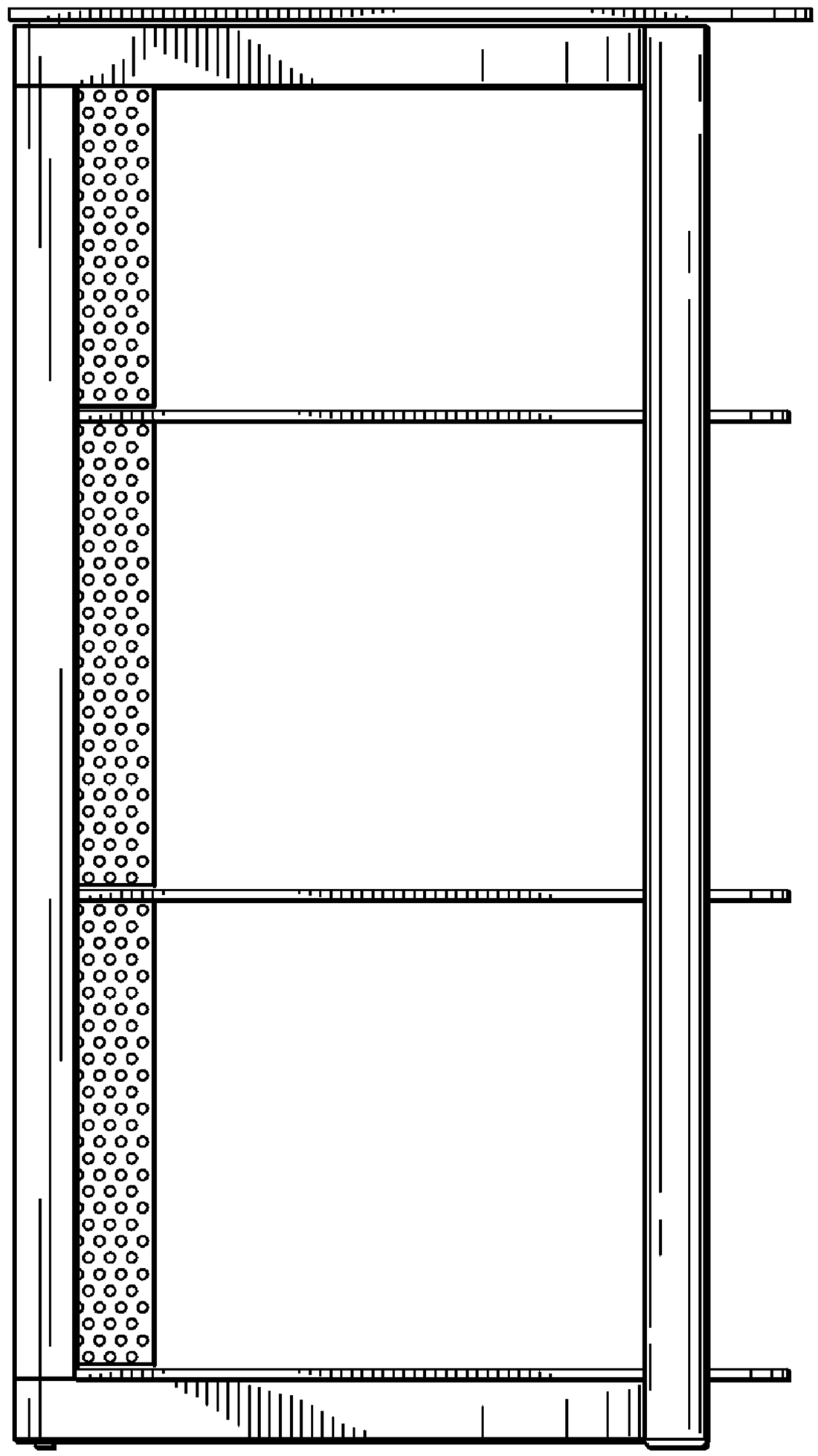

FIG. 5

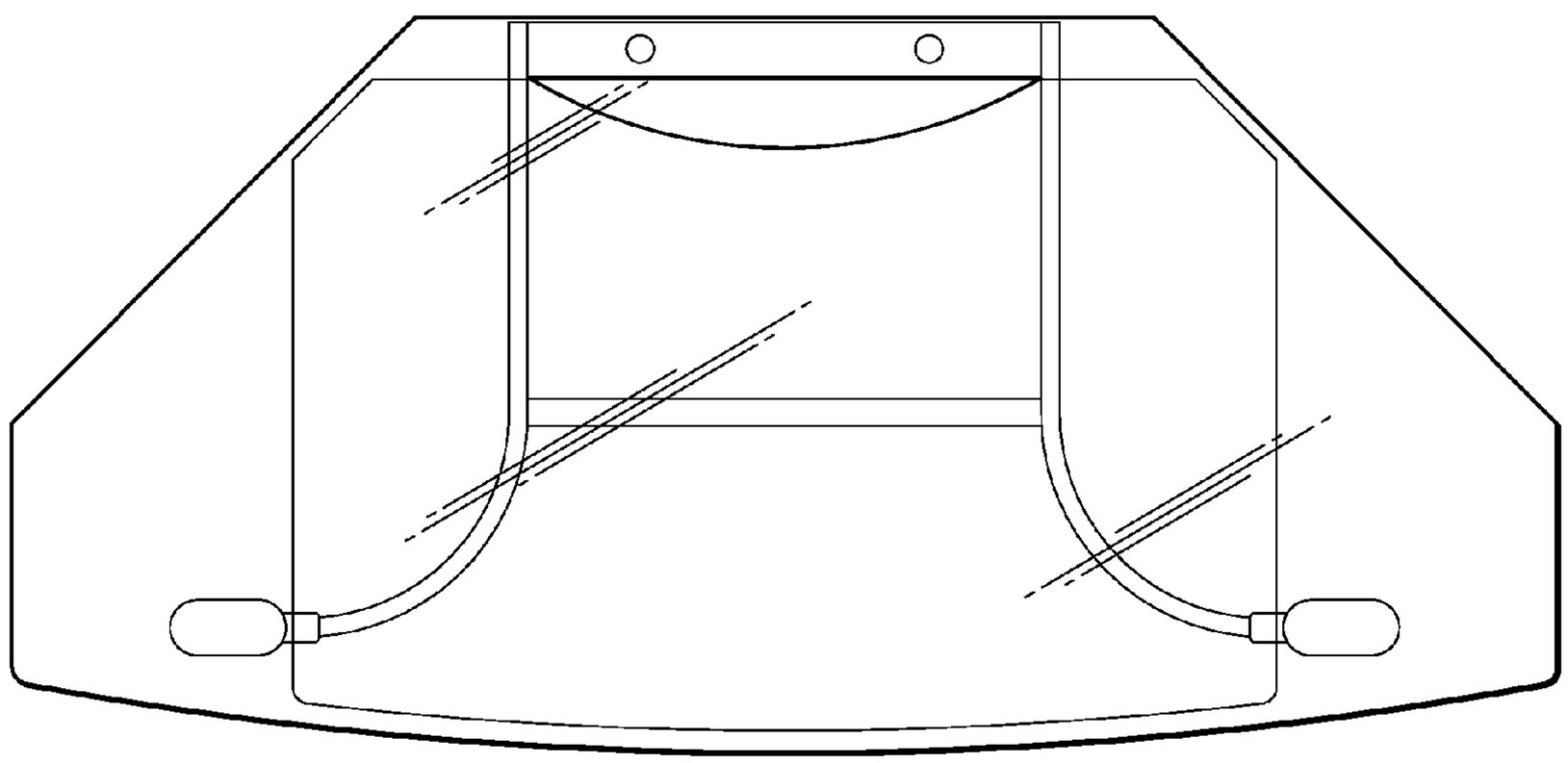

FIG. 6

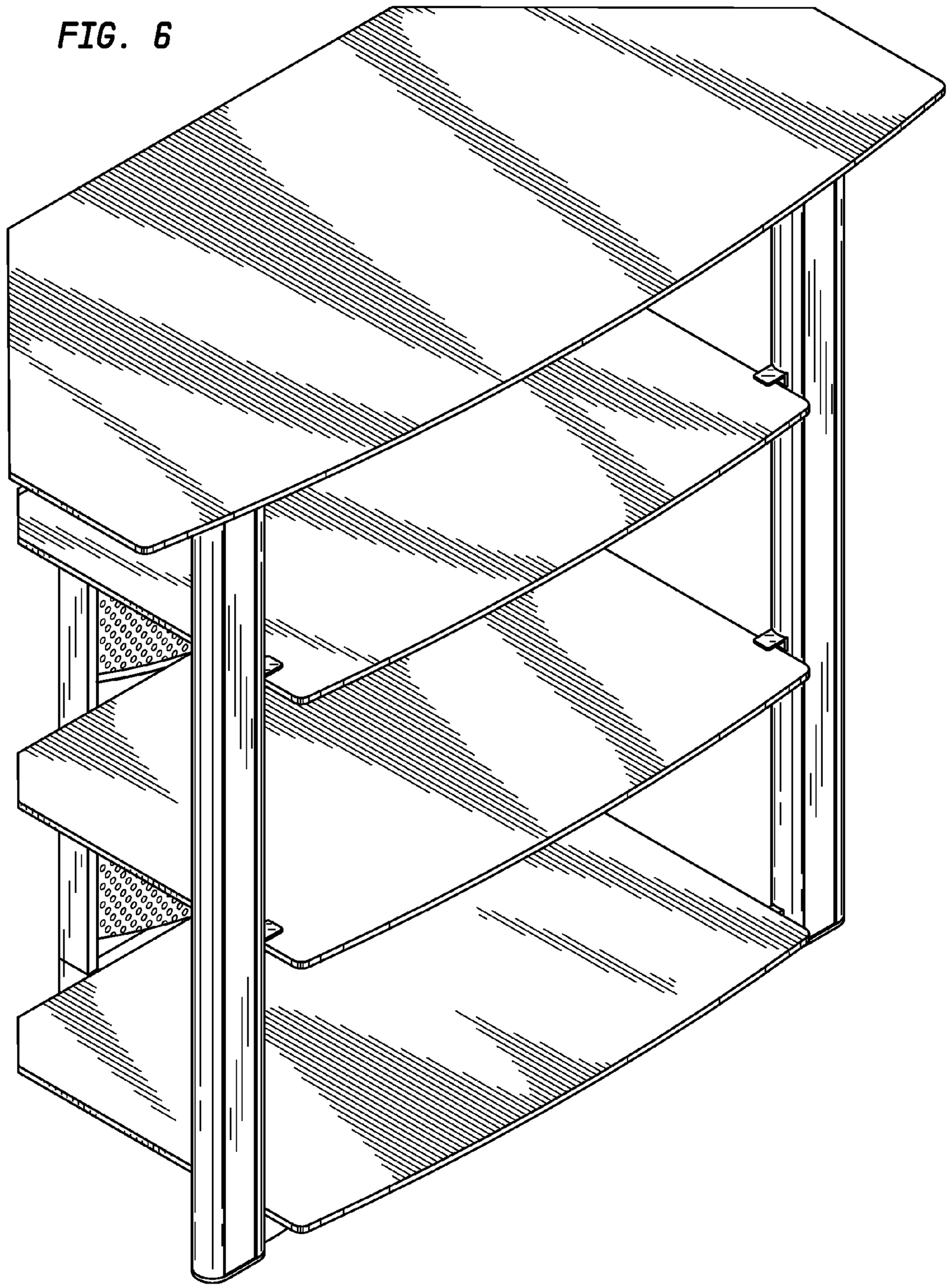
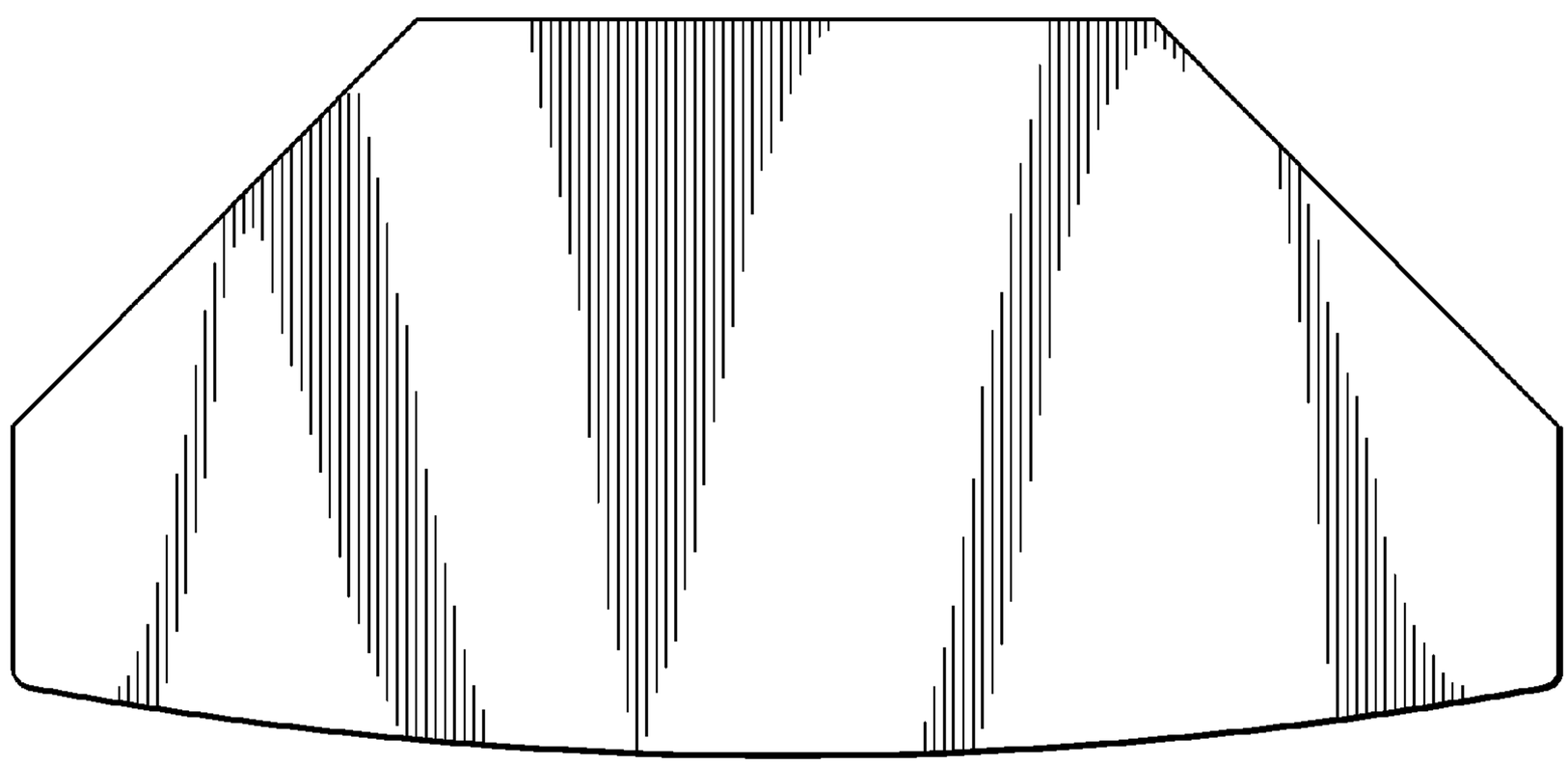
FIG. 7