US00D619962S

(12) United States Design Patent

Gardner et al.

(10) Patent No.: US D619,962 S
(45) Date of Patent: ** Jul. 20, 2010

(54) **SERVO THROTTLE MOTOR SHIELD**

(76) Inventors: **Glen Gardner**, 107 Aeries Ave., Cascade, IA (US) 52033; **Robert Michael Knepper**, 107 Aeries Ave., Cascade, IA (US) 52033

(**) Term: **14 Years**

(21) Appl. No.: **29/350,265**

(22) Filed: **Nov. 13, 2009**

(51) **LOC (9) Cl.** **13-01**
(52) **U.S. Cl.** **D13/122**
(58) **Field of Classification Search** D13/122, D13/101, 118, 184, 199; D8/349, 354, 382; D12/114, 126, 223; D15/5, 199; 180/84, 180/232; 280/288.4; 310/85, 88, 89, 91, 310/273, 400
See application file for complete search history.

(56) **References Cited**

U.S. PATENT DOCUMENTS

D411,148 S * 6/1999 Swenson et al. D12/126
D416,227 S * 11/1999 Egan D13/122
6,005,471 A * 12/1999 Higashikata et al. 337/347
D427,888 S * 7/2000 Hannon D8/354
D515,985 S * 2/2006 Kishi et al. D12/126
D530,278 S * 10/2006 Lyle et al. D13/122

* cited by examiner

Primary Examiner—Prabhakar Deshmukh
Assistant Examiner—Derrick Holland
(74) *Attorney, Agent, or Firm*—Ryan N. Carter; Glenn Johnson

(57) **CLAIM**

The ornamental design for a servo throttle motor shield, as shown and described.

DESCRIPTION

FIG. **1** is a perspective view of a servo throttle motor shield showing our new design;

FIG. **2** is a first side view;

FIG. **3** is a second side view;

FIG. **4** is a first end view;

FIG. **5** is a second end view;

FIG. **6** is a top view;

FIG. **7** is a bottom view; and,

FIG. **8** is a second perspective view showing the servo throttle motor shield in environmental use.

1 Claim, 6 Drawing Sheets

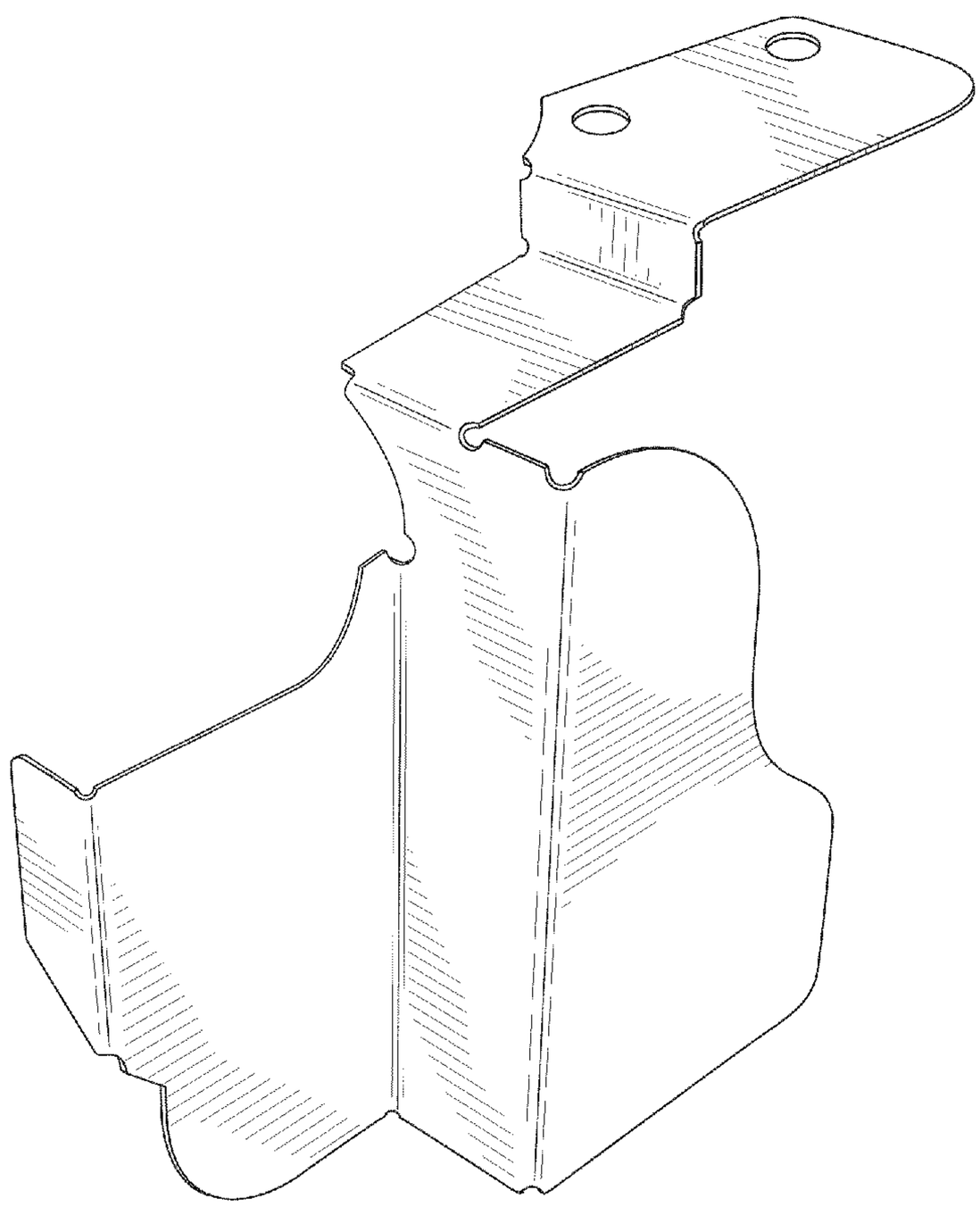

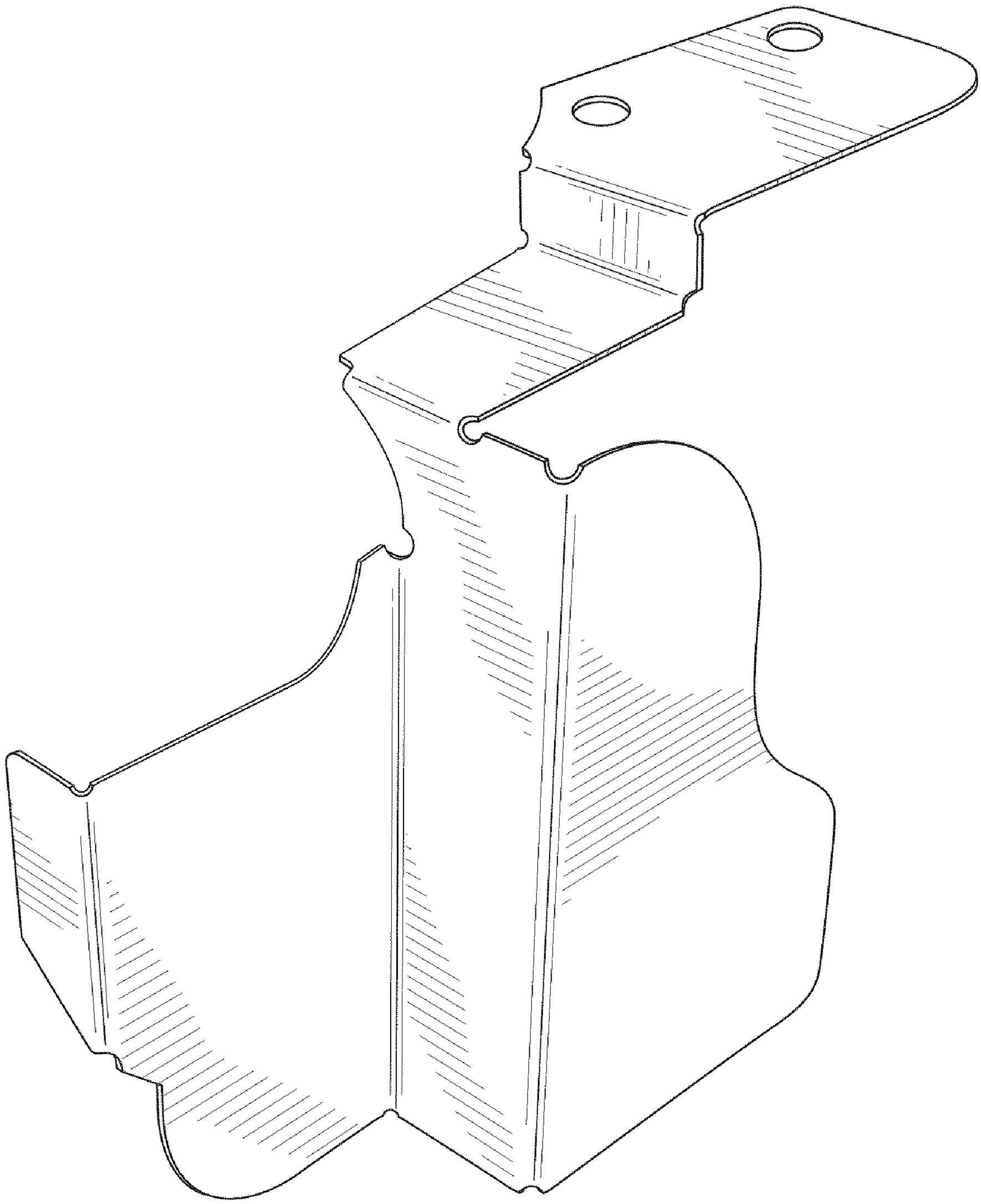

FIG. 1

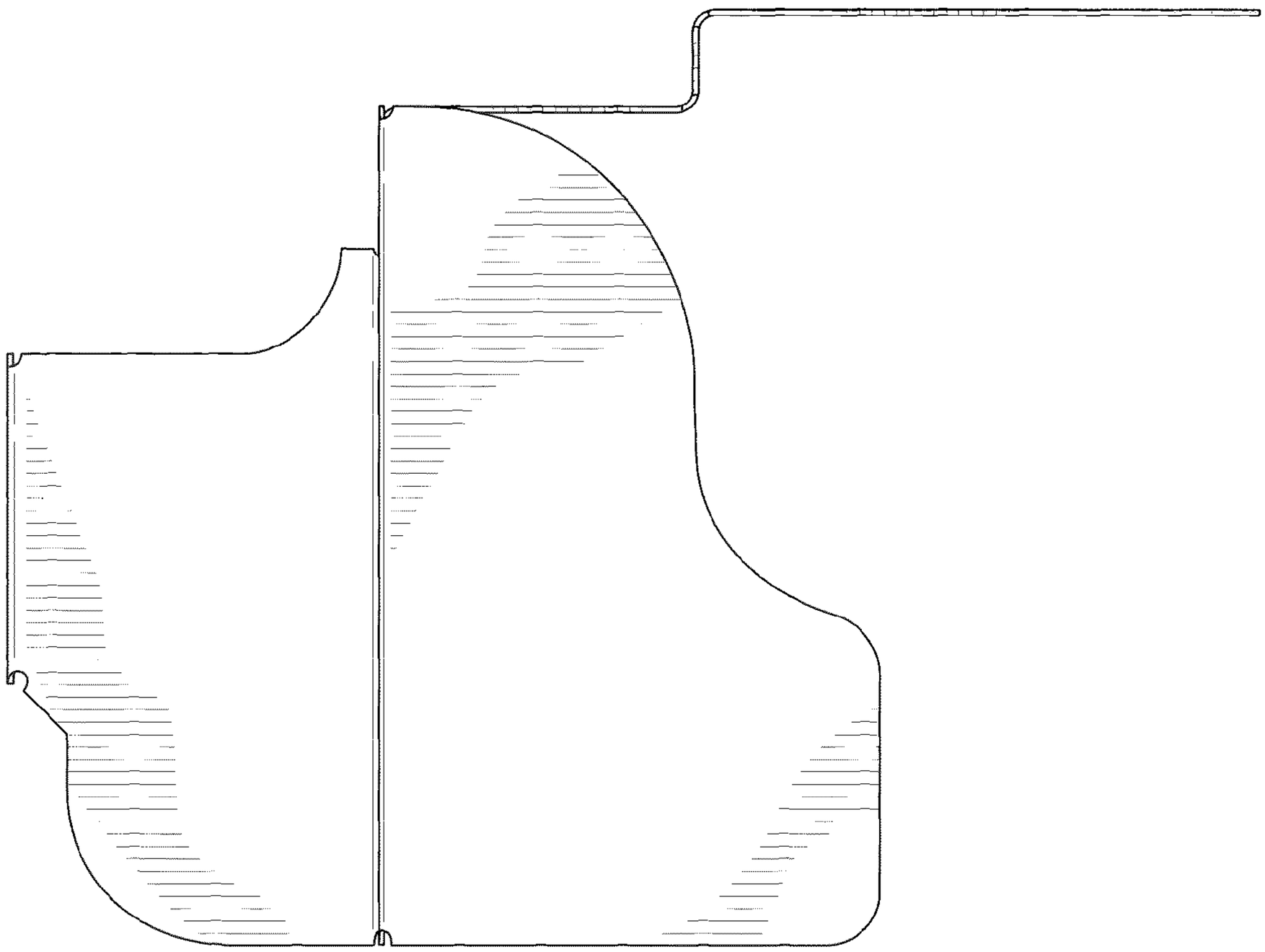

FIG. 2

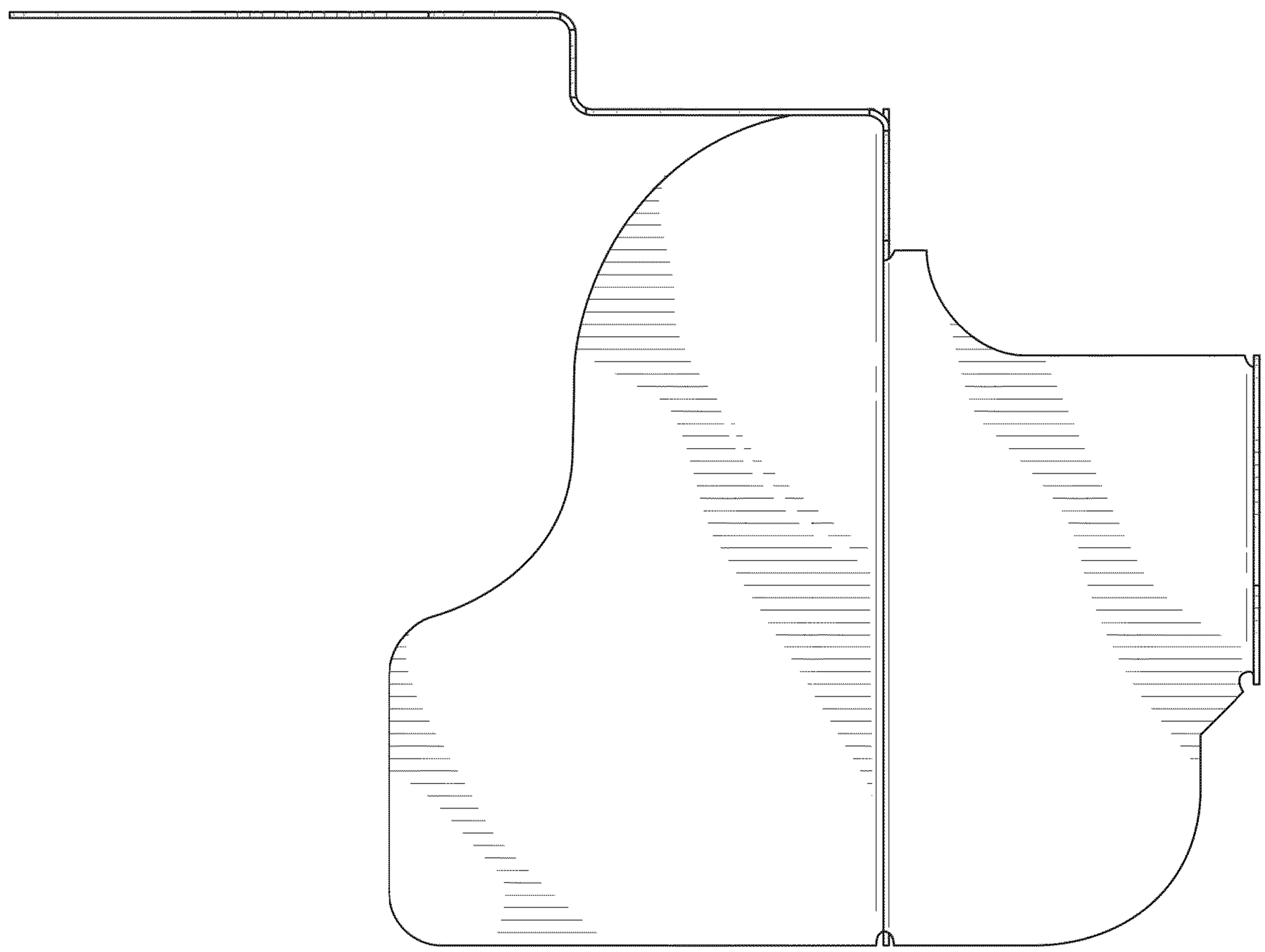

FIG. 3

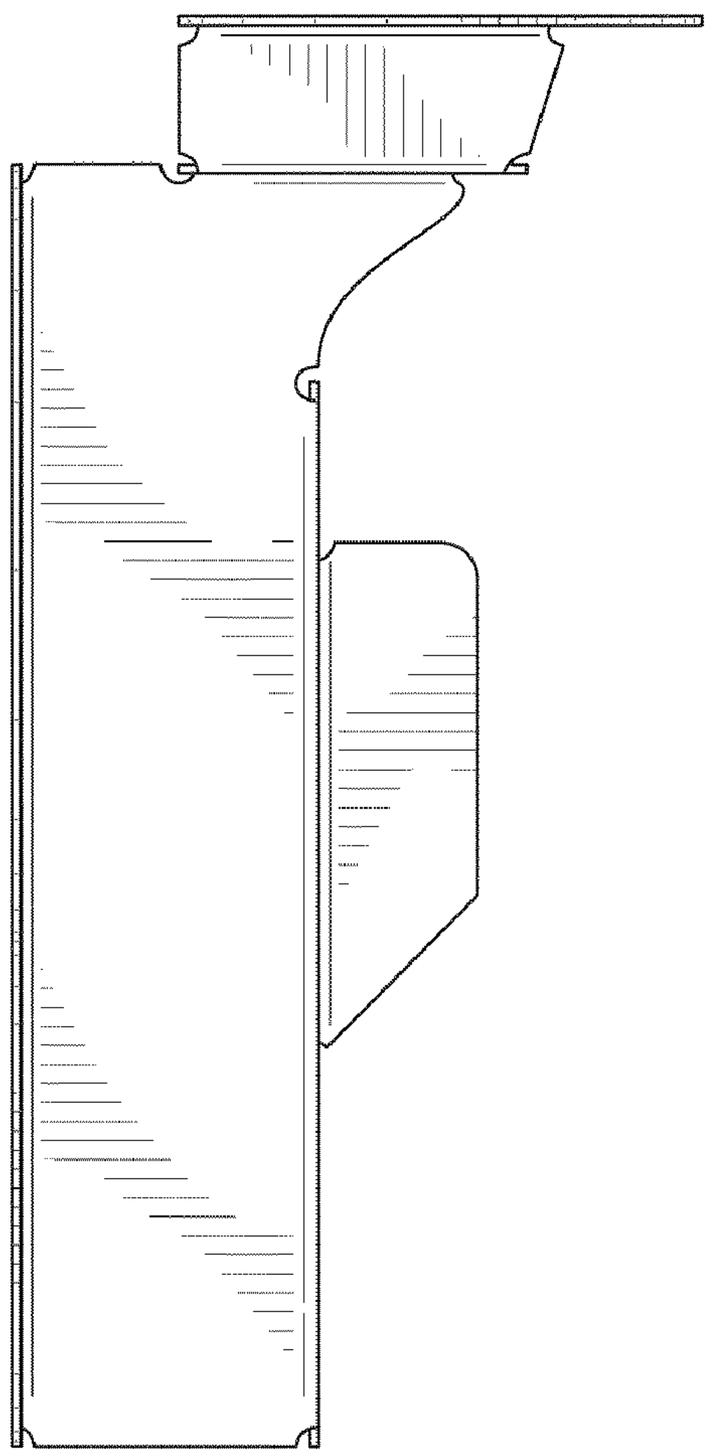

FIG. 4

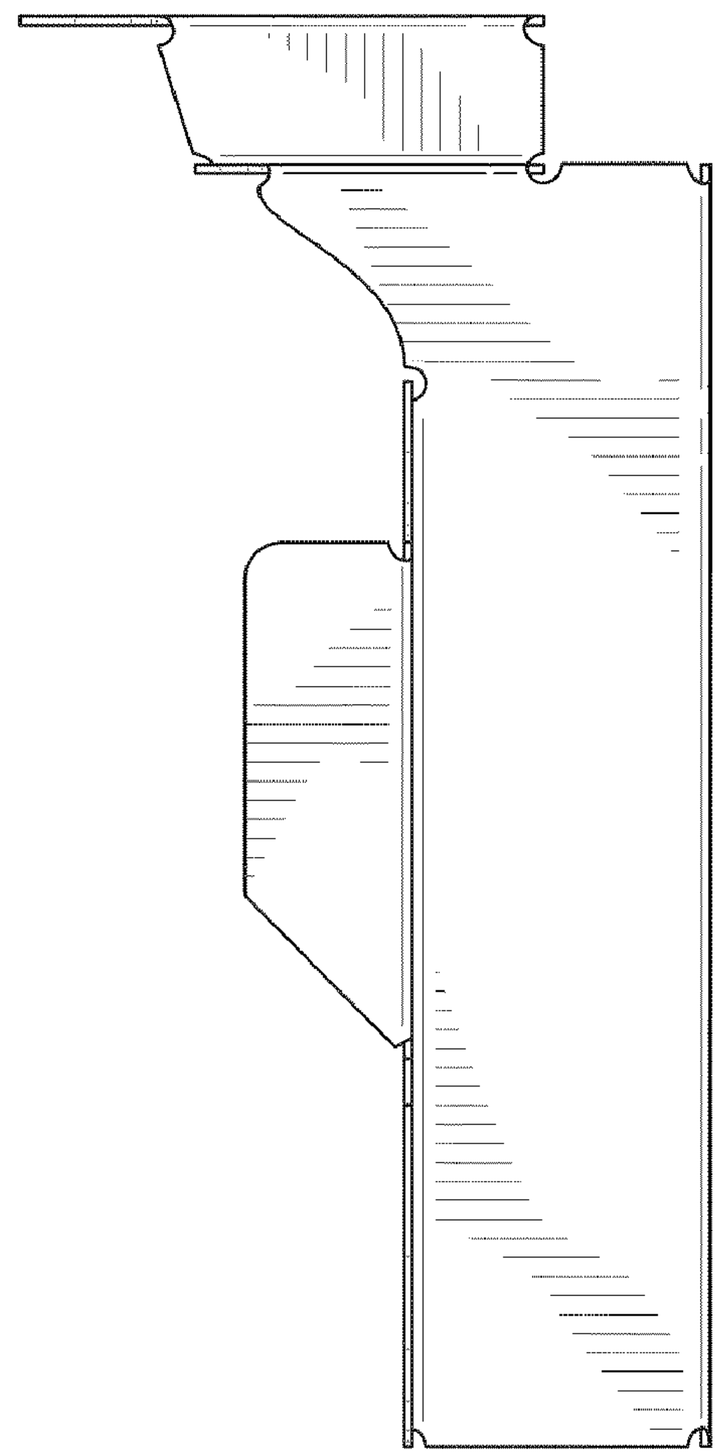

FIG. 5

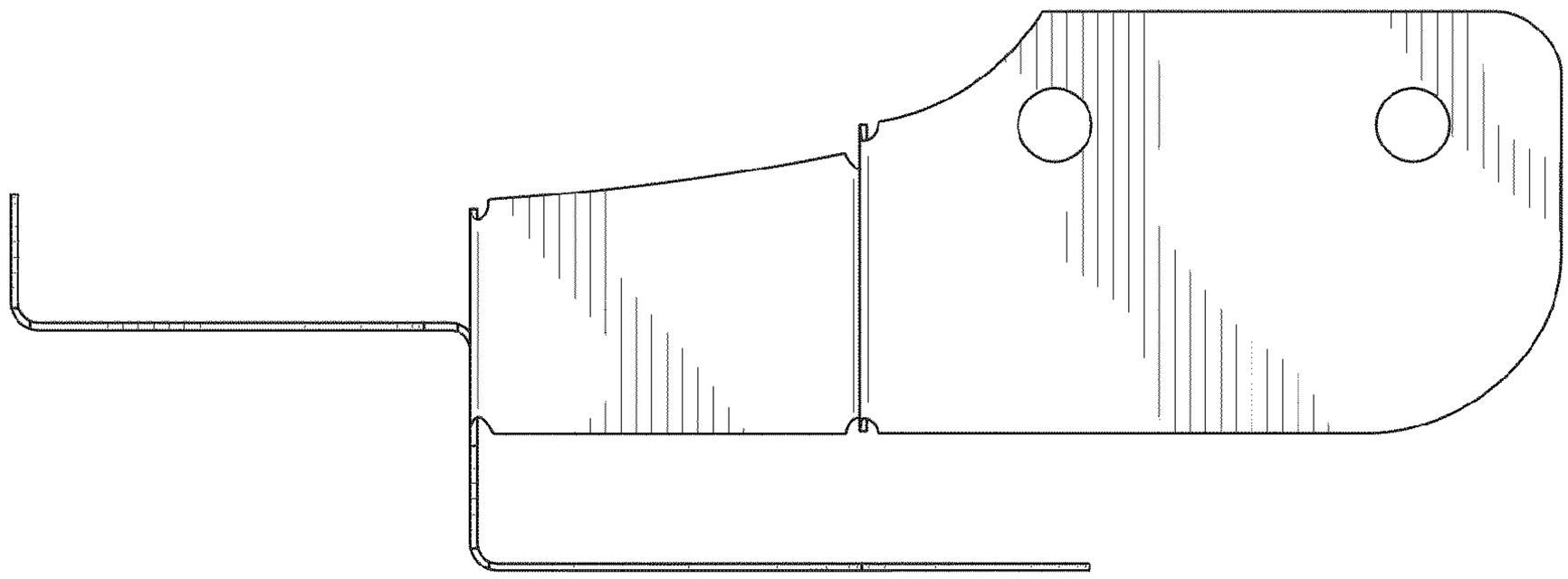

FIG. 6

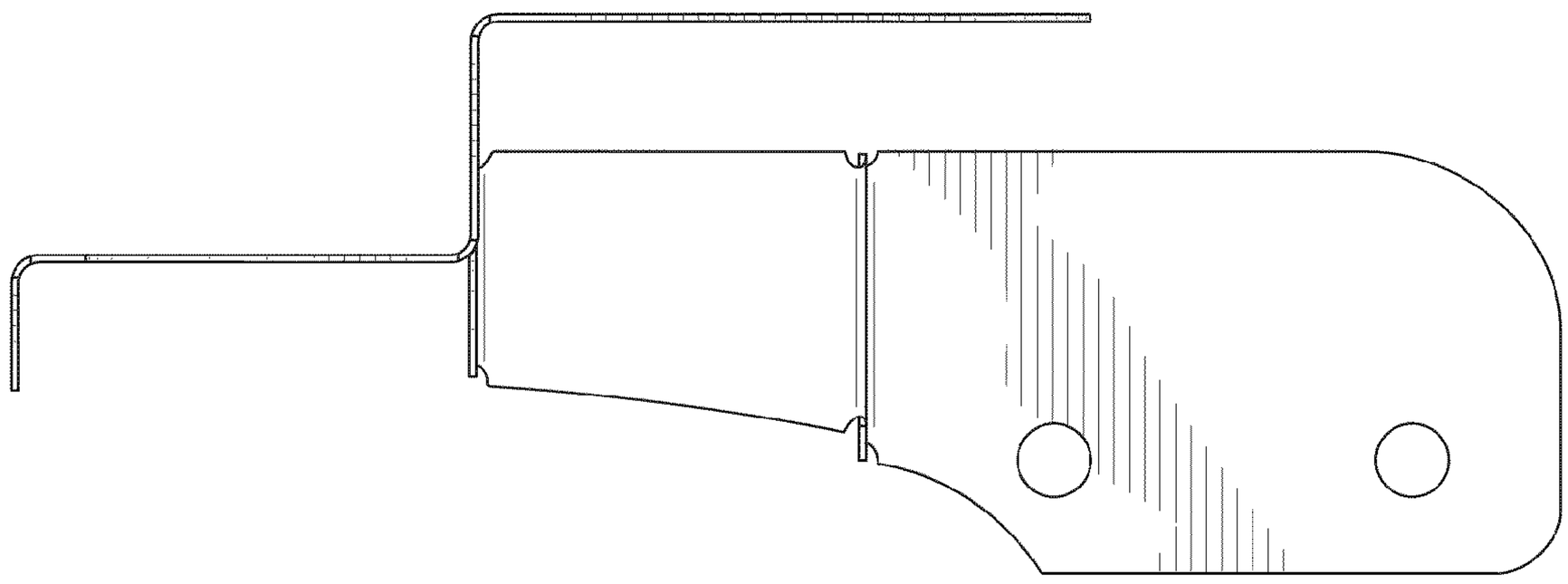

FIG. 7

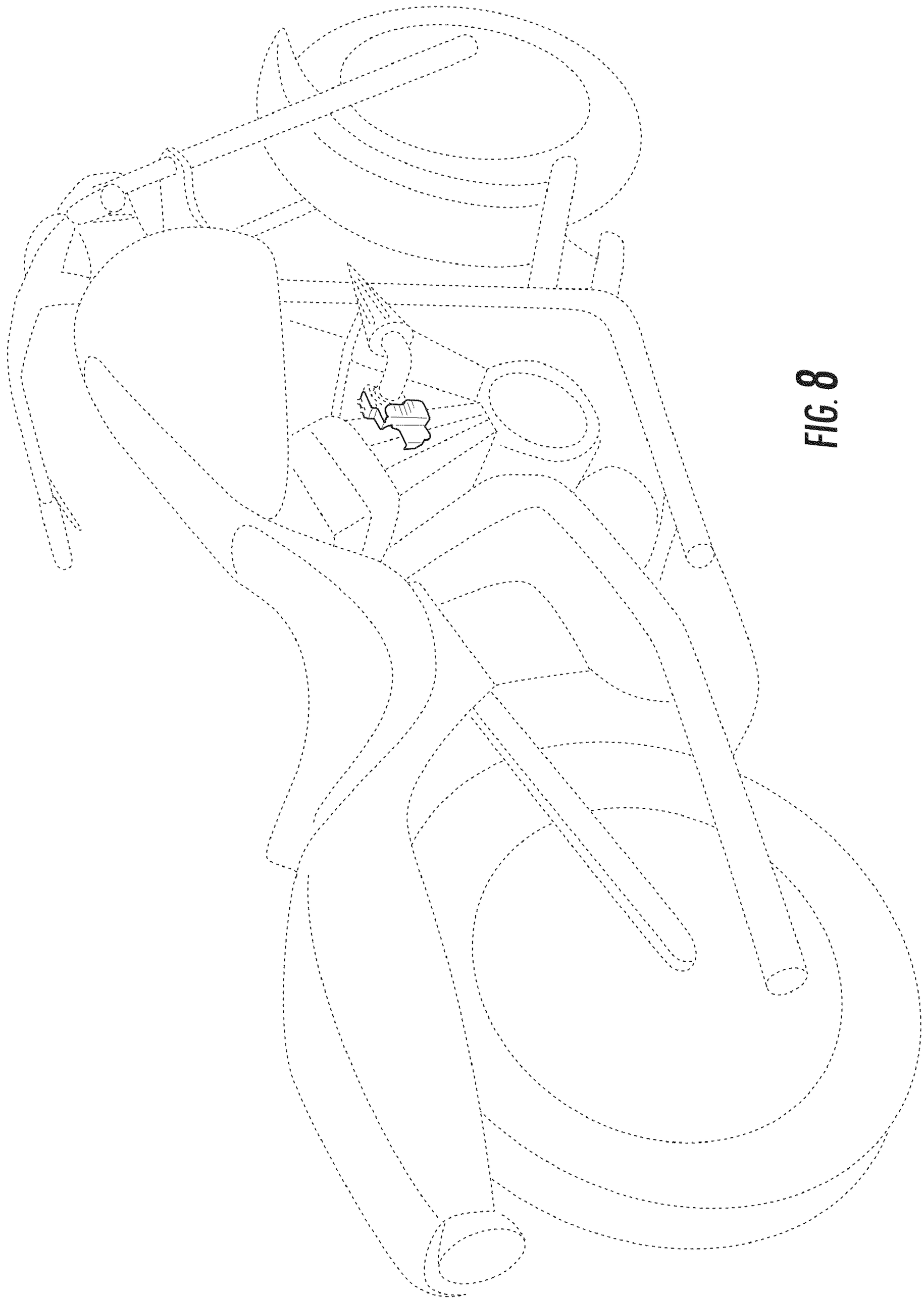

FIG. 8