US00D618663S

(12) United States Design Patent
Lee

(10) Patent No.: US D618,663 S
(45) Date of Patent: ** Jun. 29, 2010

(54) **PORTABLE MEDIA PLAYER**

(75) Inventor: **Johann Lee**, Whitestone, NY (US)

(73) Assignee: **Coby Electronics Corporation**, Lake Success, NY (US)

(**) Term: **14 Years**

(21) Appl. No.: **29/352,338**

(22) Filed: **Dec. 18, 2009**

(51) **LOC (9) Cl.** **14-03**
(52) **U.S. Cl.** **D14/203.7**; D14/203.3; D14/496
(58) **Field of Classification Search** ..... D14/496, D14/401, 435, 474, 483, 217, 137, 138, 160, D14/168, 356, 203.1–203.8, 507; 345/156, 345/169, 173–179, 905; 715/727–729, 864; 710/1, 5, 8; 713/1, 600; 455/1.1, 1.7, 73, 455/344–347, 93, 95, 3.01–3.06, 550.1, 573.1; 370/342–344; 369/1, 2, 6–12; 463/43–47; 273/148 B
See application file for complete search history.

(56) **References Cited**

U.S. PATENT DOCUMENTS

5,859,594	A *	1/1999	King et al.	340/7.55
6,122,526	A *	9/2000	Parulski et al.	455/556.1
D469,109	S	1/2003	Andre et al.	
D472,245	S	3/2003	Andre et al.	
6,593,914	B1 *	7/2003	Nuovo et al.	345/169
D497,618	S	10/2004	Andre et al.	
D506,476	S	6/2005	Andre et al.	
D516,576	S	3/2006	Ive et al.	
D527,015	S *	8/2006	Yang	D14/203.7
D538,820	S	3/2007	Andre et al.	
D538,822	S	3/2007	Andre et al.	
D539,815	S *	4/2007	Lai et al.	D14/203.7
D541,297	S	4/2007	Andre et al.	
D541,298	S	4/2007	Andre et al.	
D541,299	S	4/2007	Andre et al.	
D548,744	S	8/2007	Andre et al.	
D548,745	S	8/2007	Andre et al.	
D548,746	S	8/2007	Andre et al.	
7,281,214	B2 *	10/2007	Fadell	715/745
D562,348	S	2/2008	Andre et al.	
D562,847	S	2/2008	Andre et al.	
D565,596	S *	4/2008	Kim	D14/496
D568,338	S	5/2008	Andre et al.	
D570,372	S	6/2008	Andre et al.	
D571,375	S	6/2008	Andre et al.	
D572,267	S	7/2008	Andre et al.	

(Continued)

Primary Examiner—Prabhakar Deshmukh
(74) *Attorney, Agent, or Firm*—Mayer Brown LLP

(57) **CLAIM**

The ornamental design for a portable media player, as shown and described.

DESCRIPTION

A portion of the disclosure of this patent document contains material to which a claim for copyright is made. The copyright owner has no objection to the facsimile reproduction by anyone of the patent document or the patent disclosure, as it appears in the Patent and Trademark Office patent file or records, but reserves all other copyright rights whatsoever.

FIG. **1** is a top front perspective view of a portable media player showing my new design;

FIG. **2** is a bottom rear perspective view thereof;

FIG. **3** is a top view thereof;

FIG. **4** is a left side view thereof;

FIG. **5** is a front view thereof;

FIG. **6** is a right side view thereof;

FIG. **7** is a rear view thereof; and,

FIG. **8** is a bottom view thereof.

The broken lines are for illustrative purpose only and form no part of the claimed design.

1 Claim, 3 Drawing Sheets

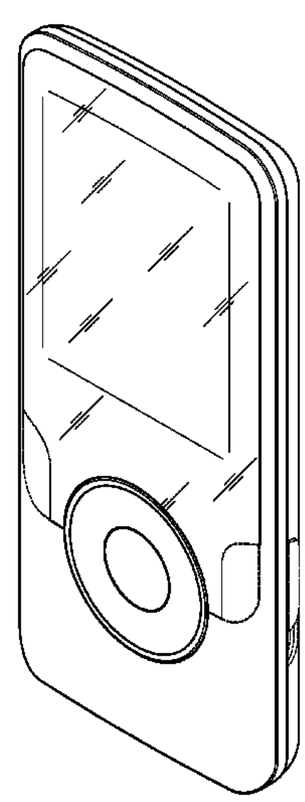

U.S. PATENT DOCUMENTS

D575,304 S 8/2008 Andre et al.
D575,305 S 8/2008 Andre et al.
D591,766 S 5/2009 Andre et al.
D593,535 S * 6/2009 Sheba et al. D14/203.7
D593,536 S 6/2009 Andre et al.
D597,521 S 8/2009 Andre et al.
D597,556 S 8/2009 Andre et al.
D597,558 S 8/2009 Andre et al.
D601,122 S * 9/2009 Hibino et al. D14/203.7
D607,872 S * 1/2010 Lee D14/203.7

* cited by examiner

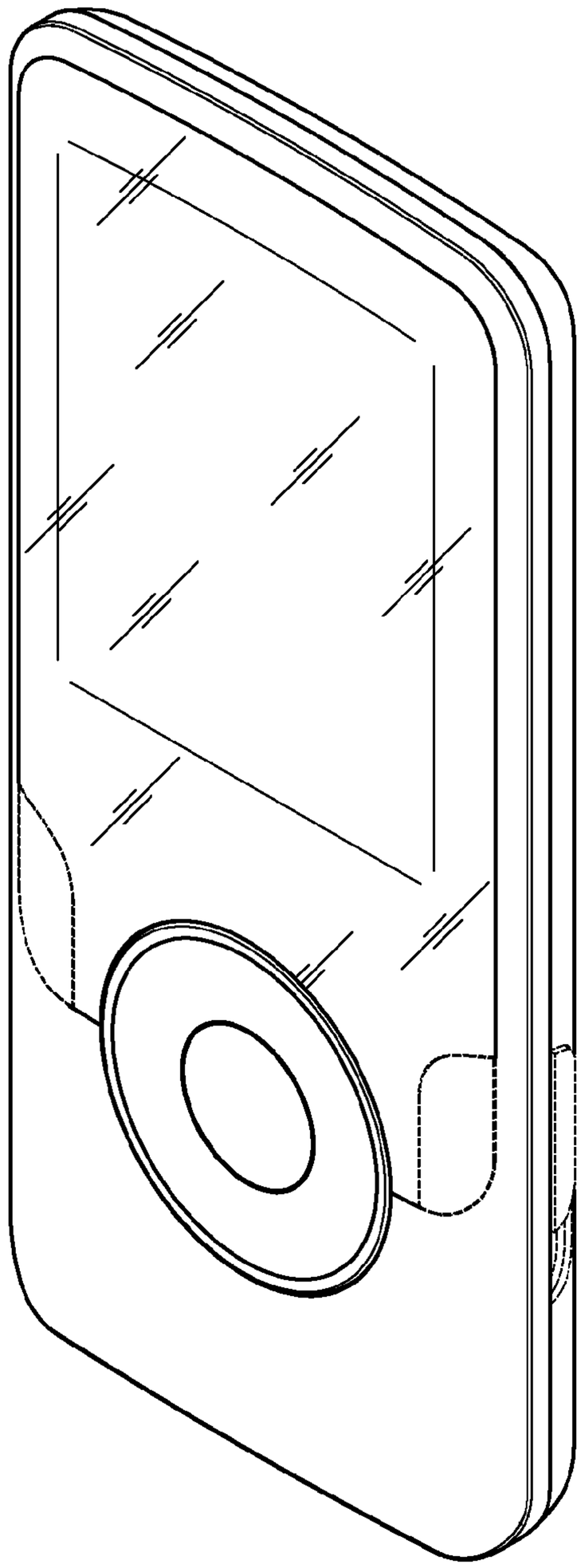

FIG. 1

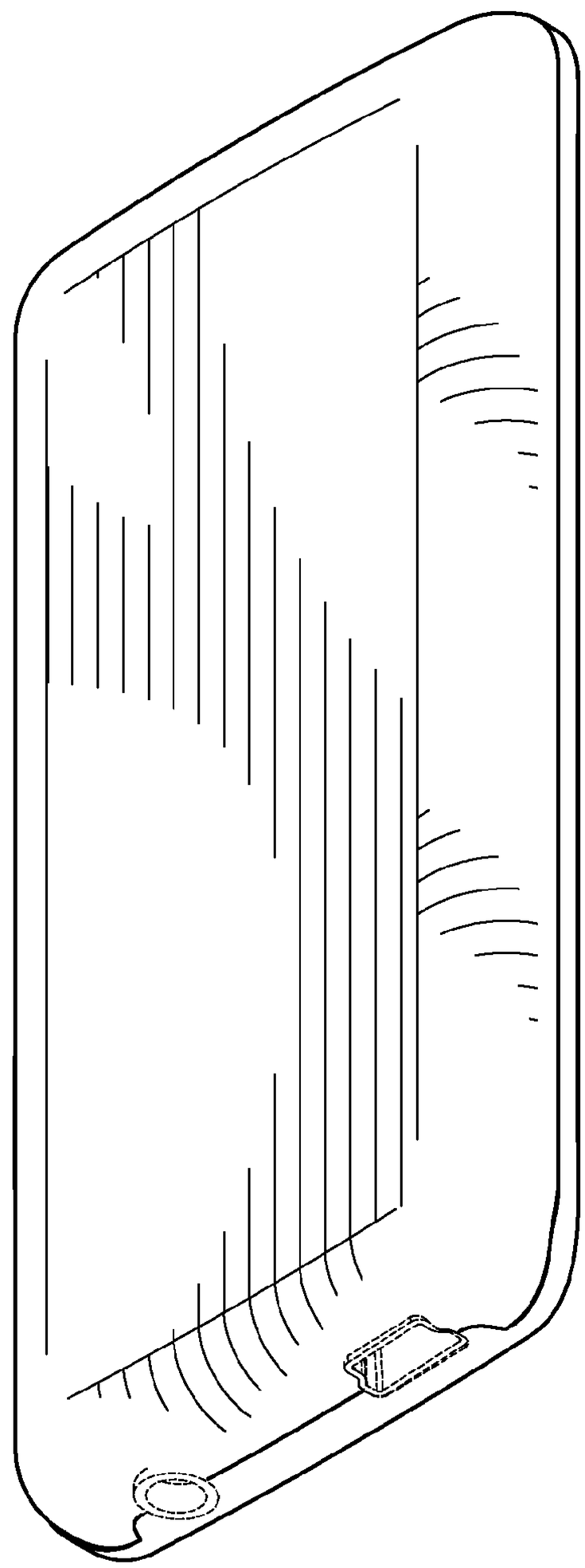

FIG. 2

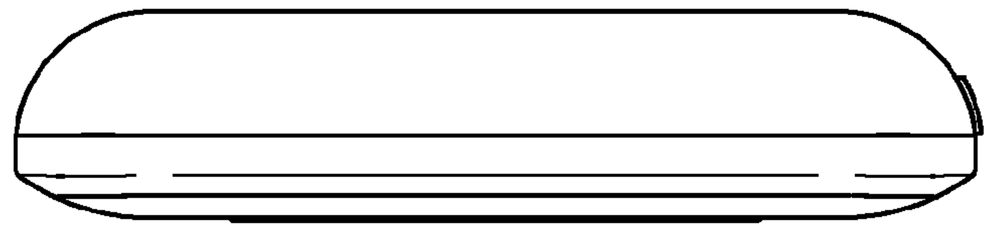

FIG. 3

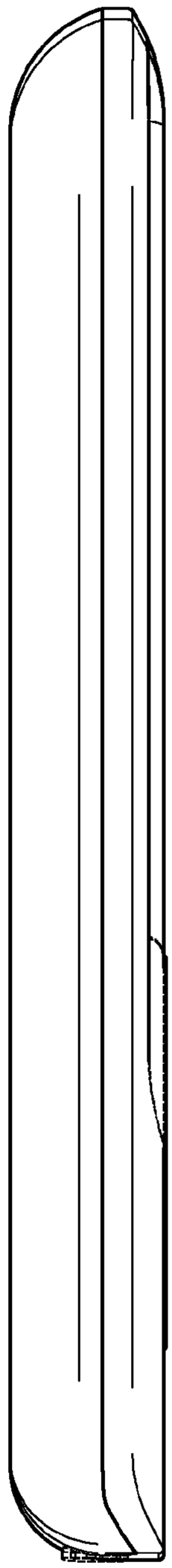

FIG. 4

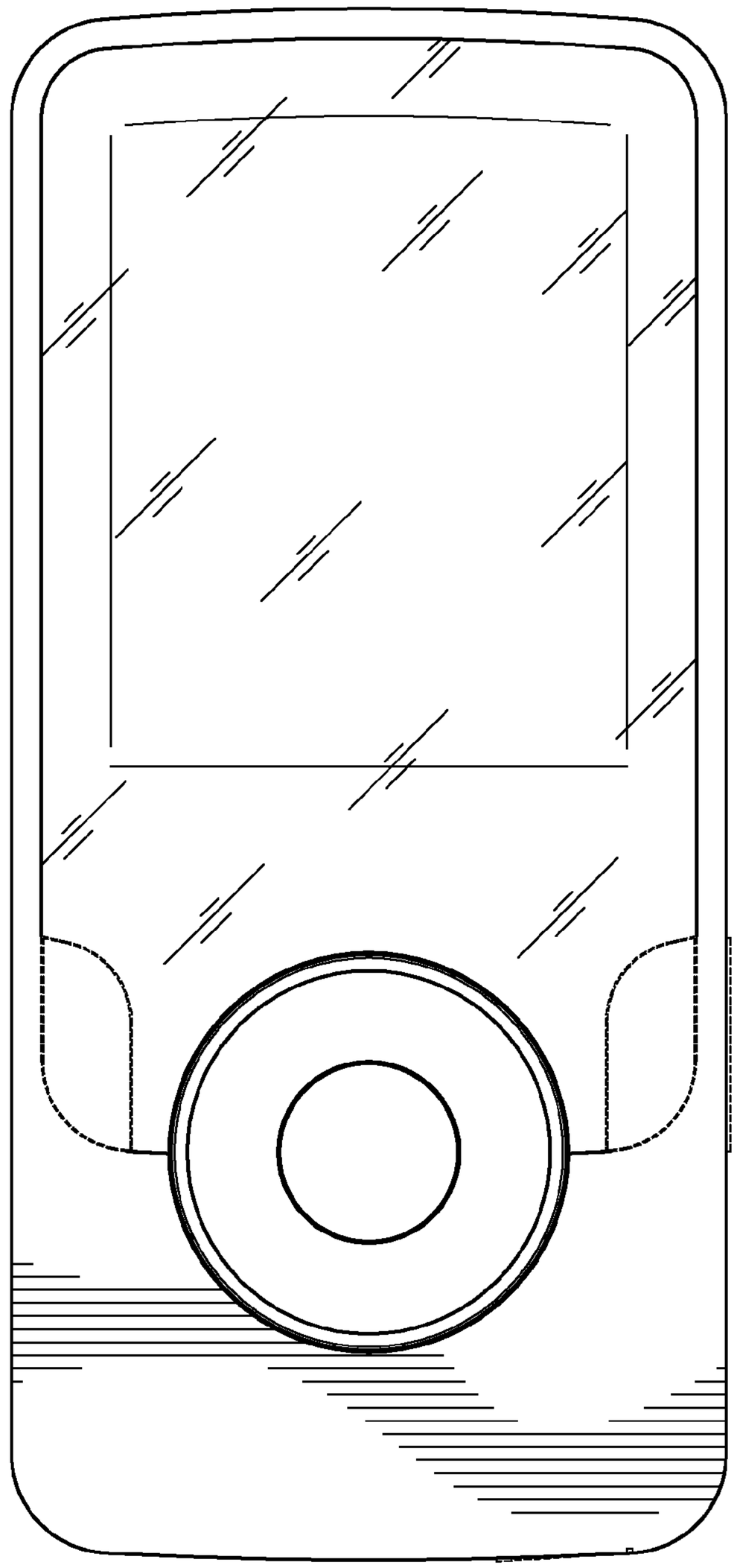

FIG. 5

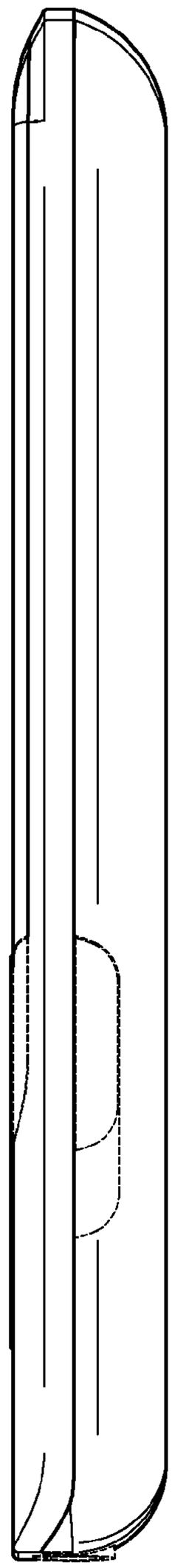

FIG. 6

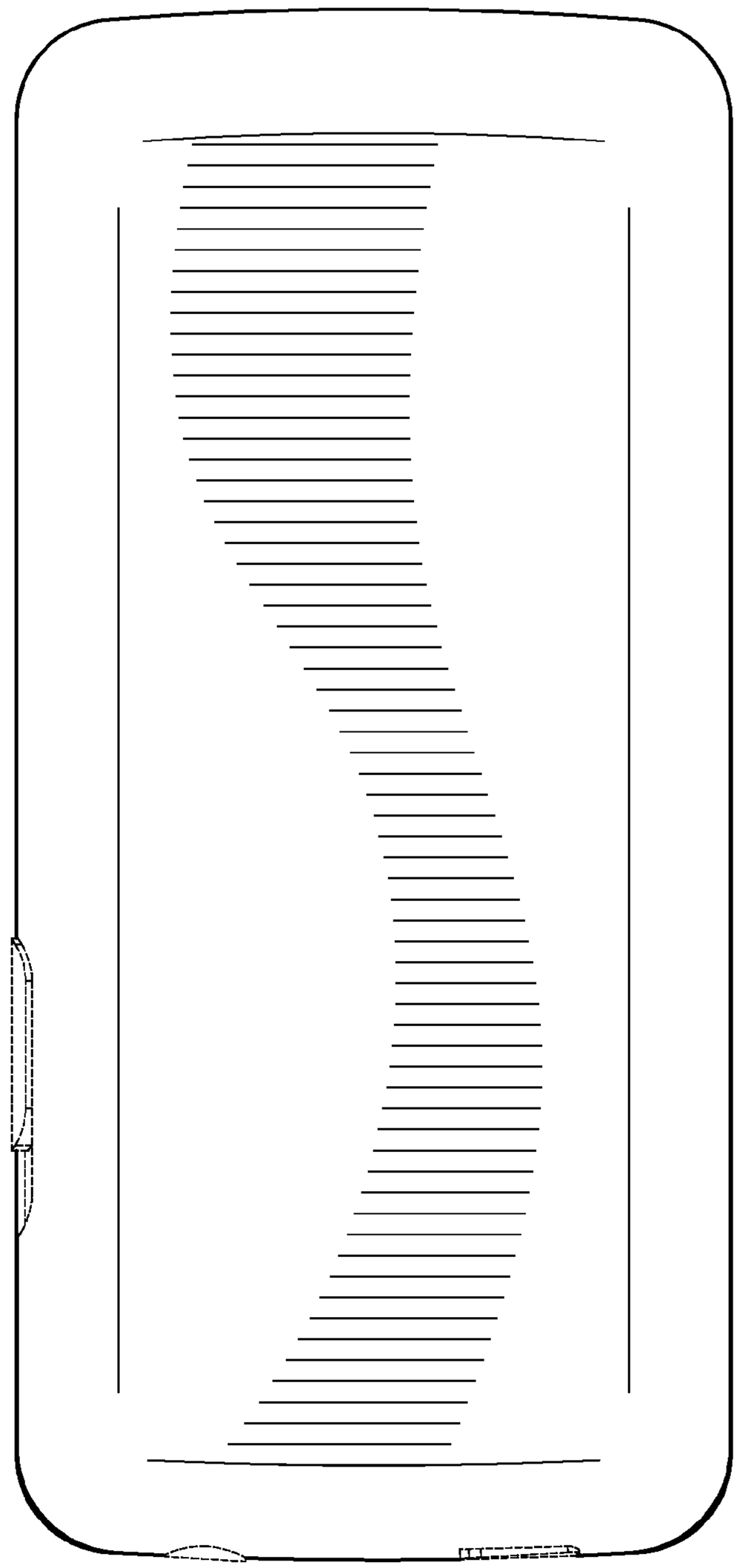

FIG. 7

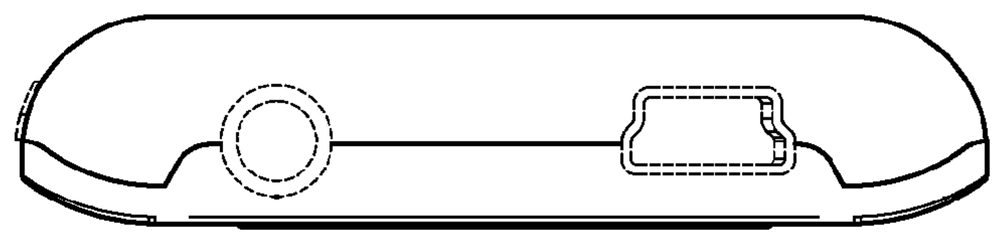

FIG. 8