US00D617629S

(12) United States Design Patent

Stafford et al.

(10) Patent No.: US D617,629 S
(45) Date of Patent: ** Jun. 15, 2010

(54) **ROPE GRIP SLIP-KNOT DEVICE**

(75) Inventors: **Arthur Stafford**, Reading, MA (US); **Michael David Tinstman**, Revere, MA (US); **Daniel Richard Armstrong**, Marblehead, MA (US); **William Paul Liteplo**, Cambridge, MA (US); **John Darin Fiegener**, Marblehead, MA (US)

(73) Assignee: **Stafford Manufacturing Corp.**, Wilmington, MA (US)

(**) Term: **14 Years**

(21) Appl. No.: **29/324,704**

(22) Filed: **Sep. 18, 2008**

(51) **LOC (9) Cl.** **08-05**
(52) **U.S. Cl.** **D8/356**
(58) **Field of Classification Search** ..... D8/105, D8/107, 333, 349, 354, 356, 358, 360, 360.1, D8/367, 373, 382, 383, 394–396, 400; D13/153, D13/154; 24/18, 115 R, 197, 561, 573.11, 24/581.12, 582.13, 583.1; 52/220.7; 174/66, 174/135, 153 G, 650, 656; 242/400.1, 405.1, 242/405.2, 600, 603; 248/65, 74.1–74.4, 248/201, 214, 215, 229.26; 439/92–108, 439/501, 535; 294/82.2; D11/200, 211
See application file for complete search history.

(56) **References Cited**

U.S. PATENT DOCUMENTS

D57,385	S	*	3/1921	Schuler	D8/382
1,476,218	A	*	12/1923	Premro	403/371
2,393,070	A	*	1/1946	Saloun	43/44.91
D182,699	S	*	4/1958	Werstein	D8/80
2,903,669	A	*	9/1959	Gilman et al.	439/369
2,968,117	A	*	1/1961	Trombly	446/27
3,059,209	A	*	10/1962	Bird	439/369
3,357,066	A	*	12/1967	Moritz	403/211
3,952,685	A	*	4/1976	Hollenbush	267/72
D242,111	S	*	11/1976	Proskin	D8/333
4,139,966	A	*	2/1979	Connell	446/242
D261,102	S	*	10/1981	Hoover	D8/383
4,771,516	A	*	9/1988	Foth	24/115 R
D321,471	S	*	11/1991	Stumpf et al.	D8/400
D346,423	S	*	4/1994	Kitagawa	D22/134
D364,795	S	*	12/1995	Mekyska	D8/354
5,660,133	A	*	8/1997	Munich	114/219
D394,598	S	*	5/1998	Wang	D8/349
5,842,766	A	*	12/1998	Scharf, III	362/554
D425,398	S	*	5/2000	Fiegener et al.	D8/334
D428,794	S	*	8/2000	Fiegener et al.	D8/334
6,305,198	B1	*	10/2001	Chastain et al.	70/40
6,321,961	B1	*	11/2001	McDaid et al.	224/442
6,568,044	B1	*	5/2003	Kidd	24/104
6,600,479	B1	*	7/2003	Smith et al.	345/163

(Continued)

FOREIGN PATENT DOCUMENTS

EP 1688567 A2 * 8/2006

Primary Examiner—Robert M Spear
Assistant Examiner—Karen Acker
(74) *Attorney, Agent, or Firm*—Sand & Sebolt

(57) **CLAIM**

We claim the ornamental design for a rope grip slip-knot device, as shown and described.

DESCRIPTION

FIG. **1** is a top view of the rope grip slip-knot device showing my new design;

FIG. **2** is a right view thereof;

FIG. **3** is a left view thereof;

FIG. **4** is a bottom view thereof;

FIG. **5** is a front view thereof; and,

FIG. **6** is a back view thereof.

The broken lines in the drawings represent portions of the rope grip slip-knot device that are not part of the claim. The broken lines and the structures and features they depict form no part of the claimed design.

1 Claim, 6 Drawing Sheets

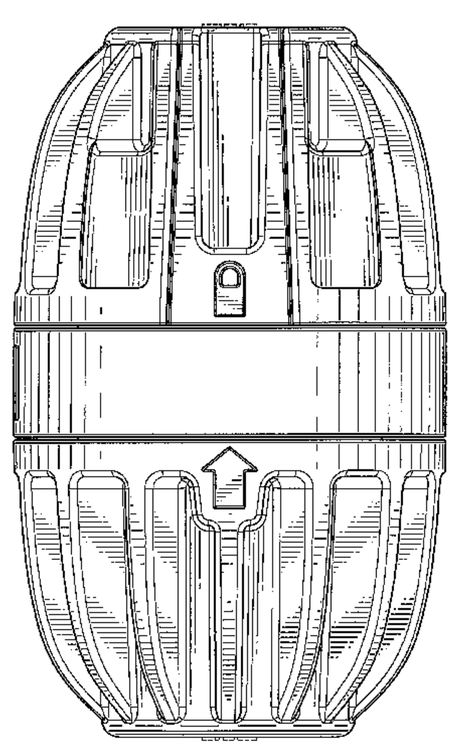

U.S. PATENT DOCUMENTS

D489,851	S *	5/2004	Jones et al.	D32/48
6,875,122	B2 *	4/2005	Collins et al.	473/220
6,911,903	B2 *	6/2005	Gladstone et al.	340/442
6,995,319	B2 *	2/2006	Ikeda	174/135
7,100,403	B2 *	9/2006	Murray et al.	70/58
D533,799	S *	12/2006	Thalhammer et al.	D10/106
D549,385	S *	8/2007	Lissoni et al.	D26/89
D552,972	S *	10/2007	Peng	D8/356
D567,126	S *	4/2008	Zheng	D10/86
D573,456	S *	7/2008	Deilmann	D8/383
2007/0097667	A1 *	5/2007	Armstrong et al.	362/101
2007/0215375	A1 *	9/2007	Peng	174/135

* cited by examiner

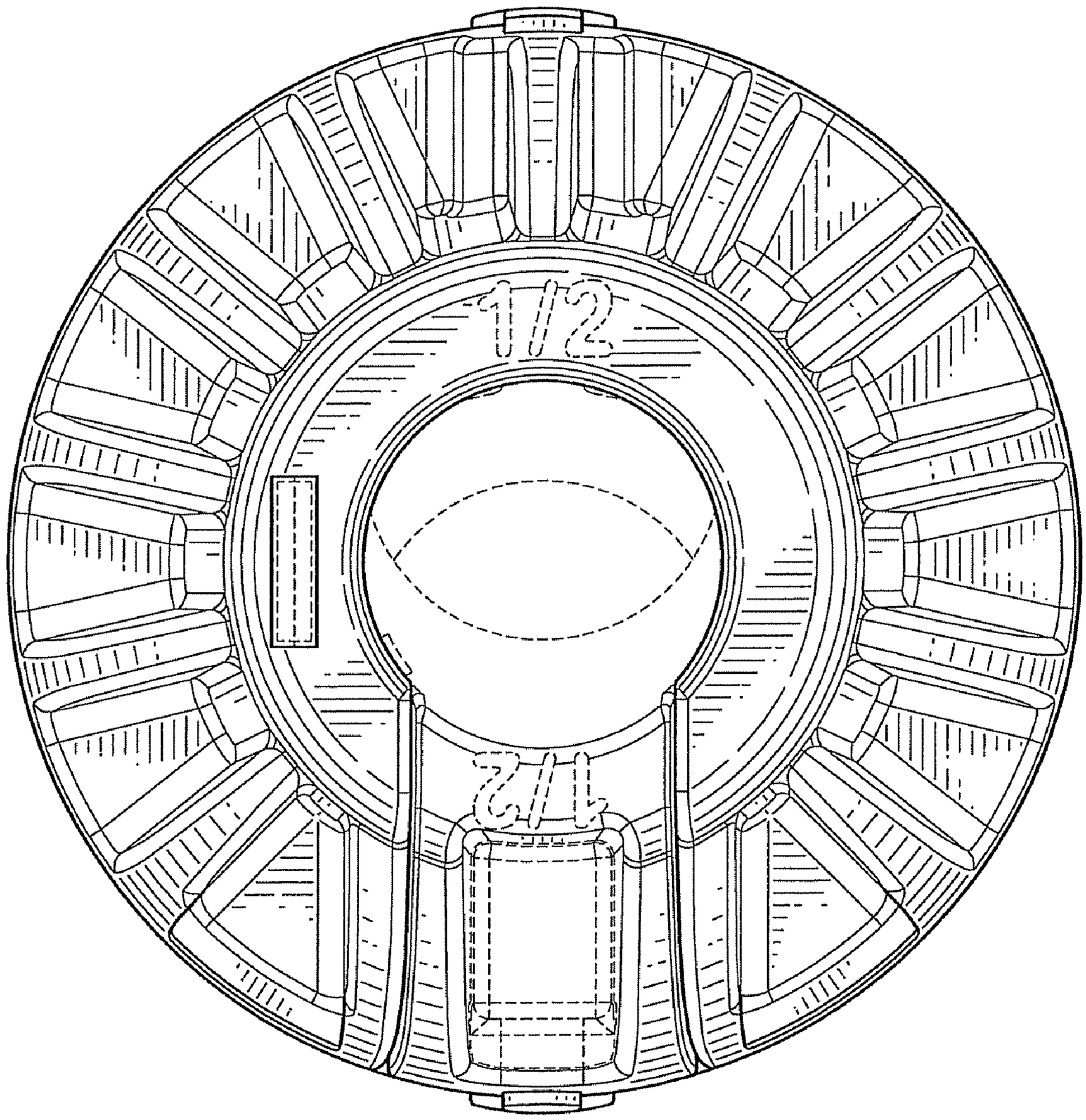

FIG-1

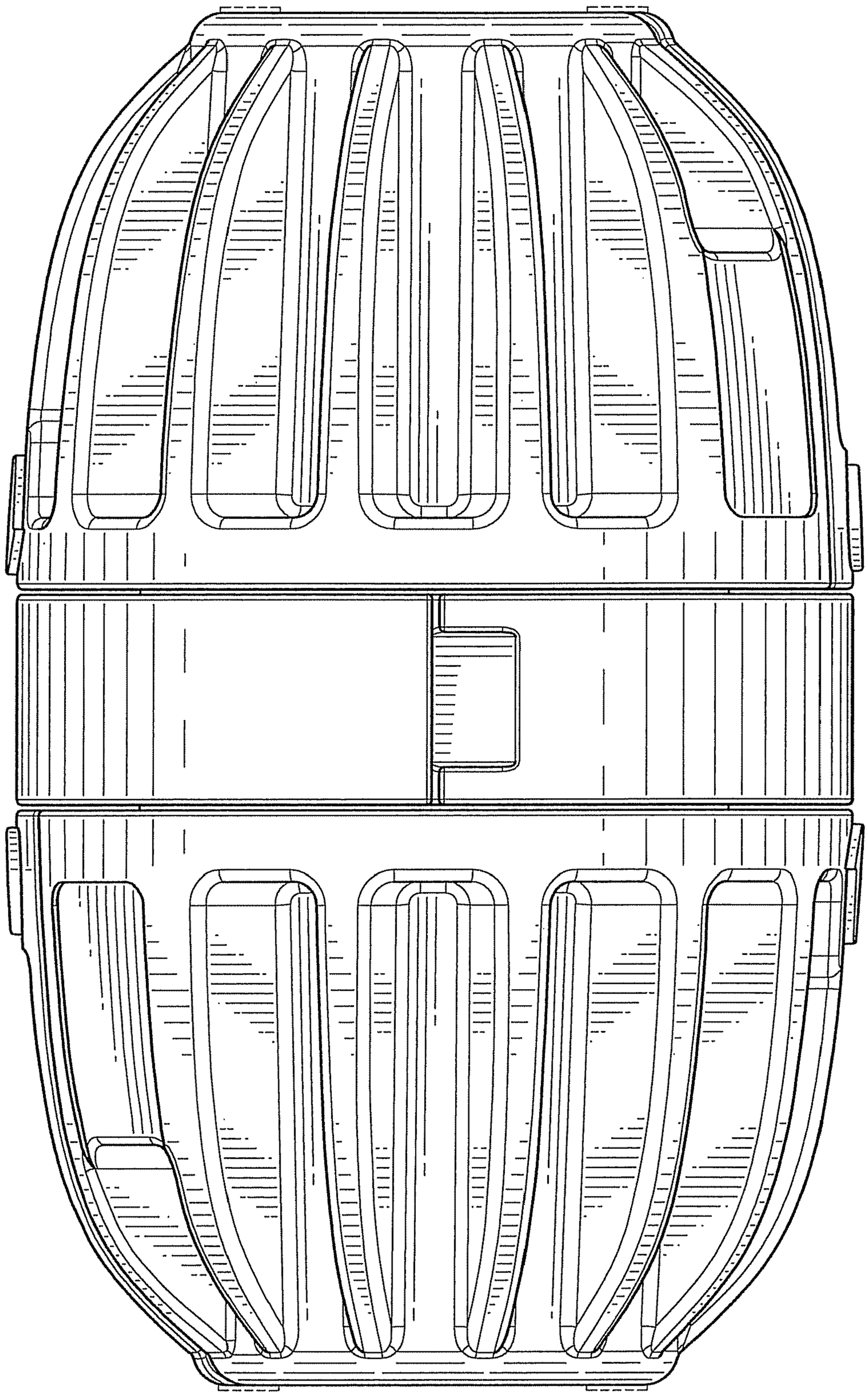

FIG–2

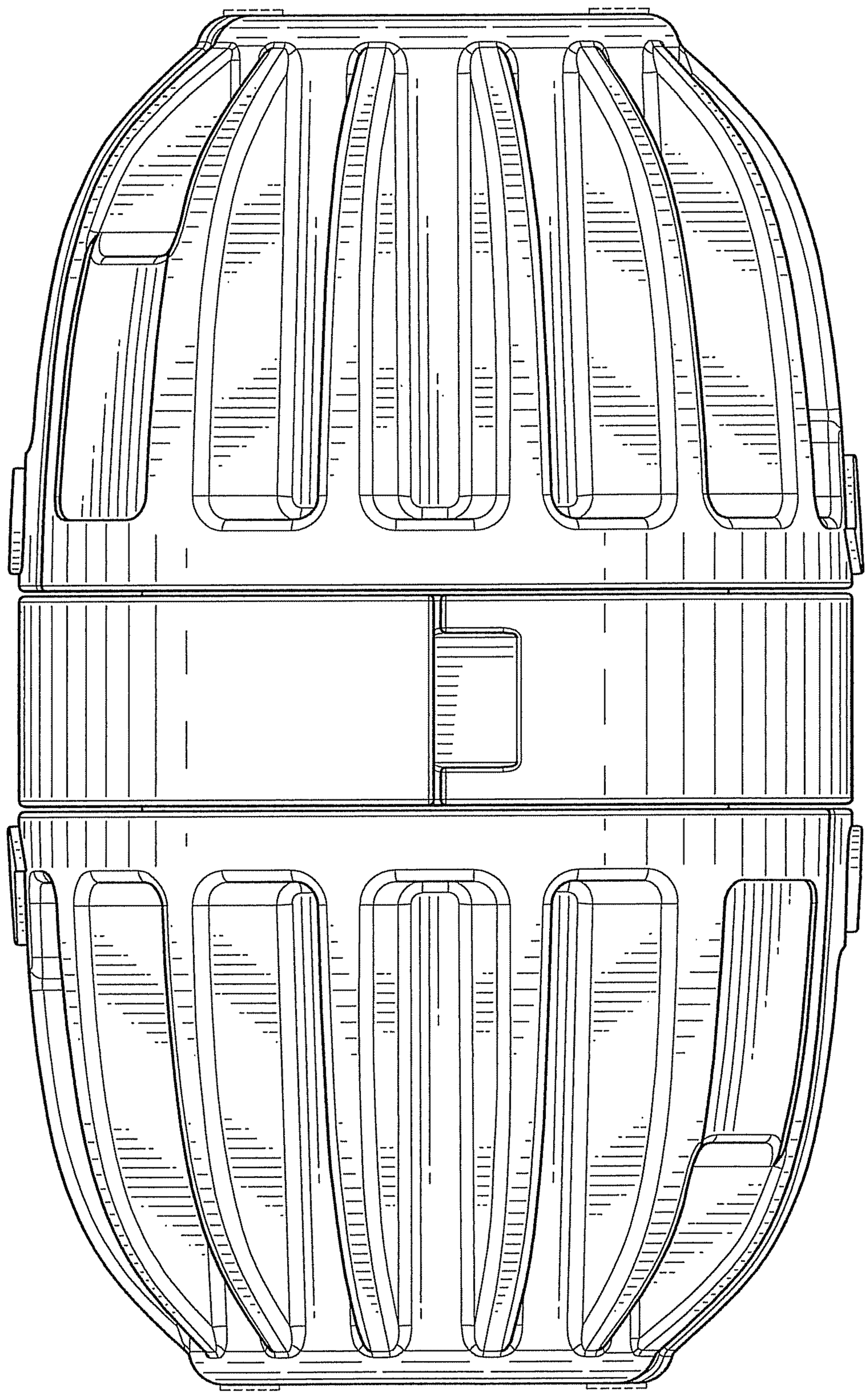

FIG-3

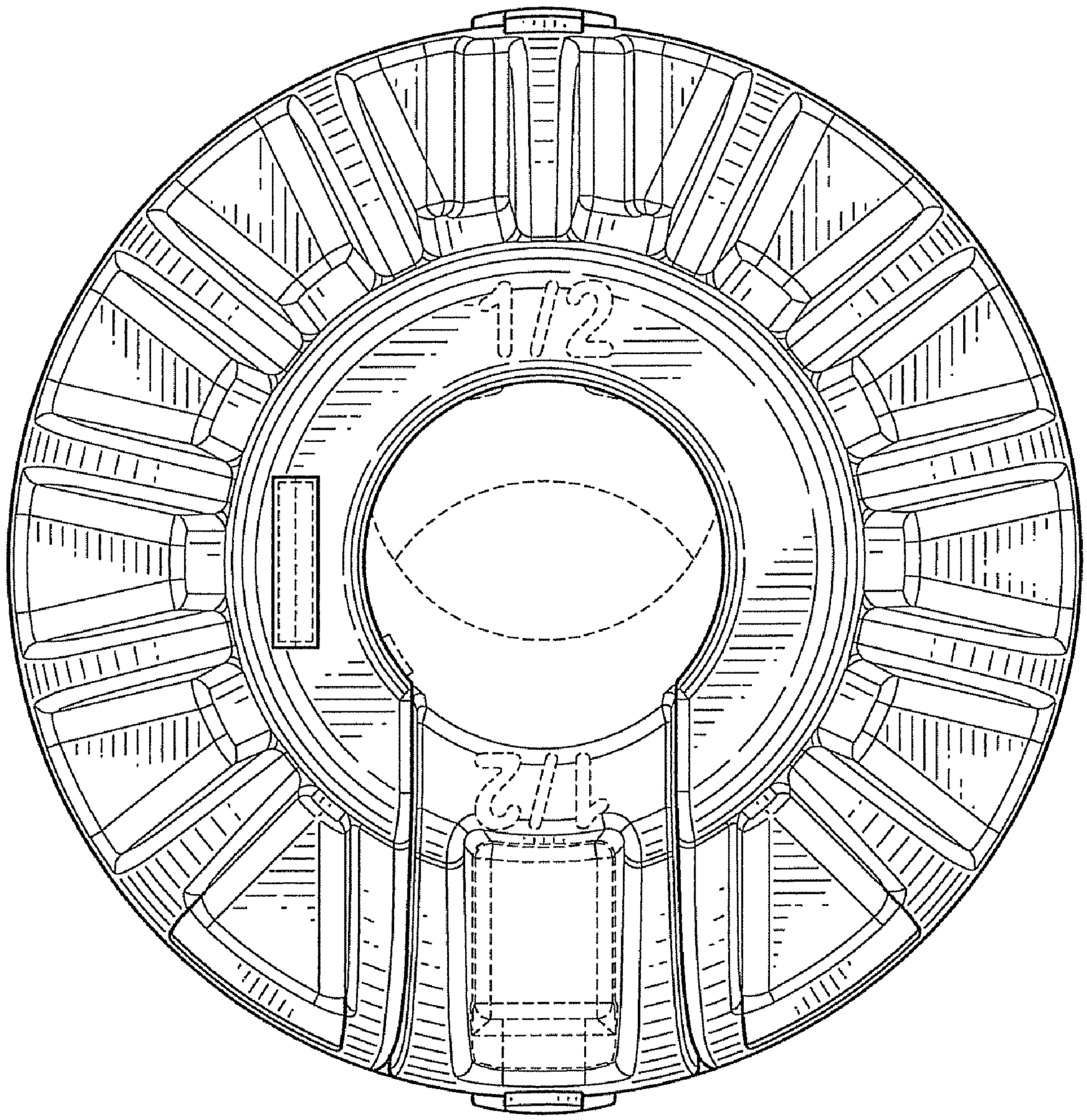

FIG-4

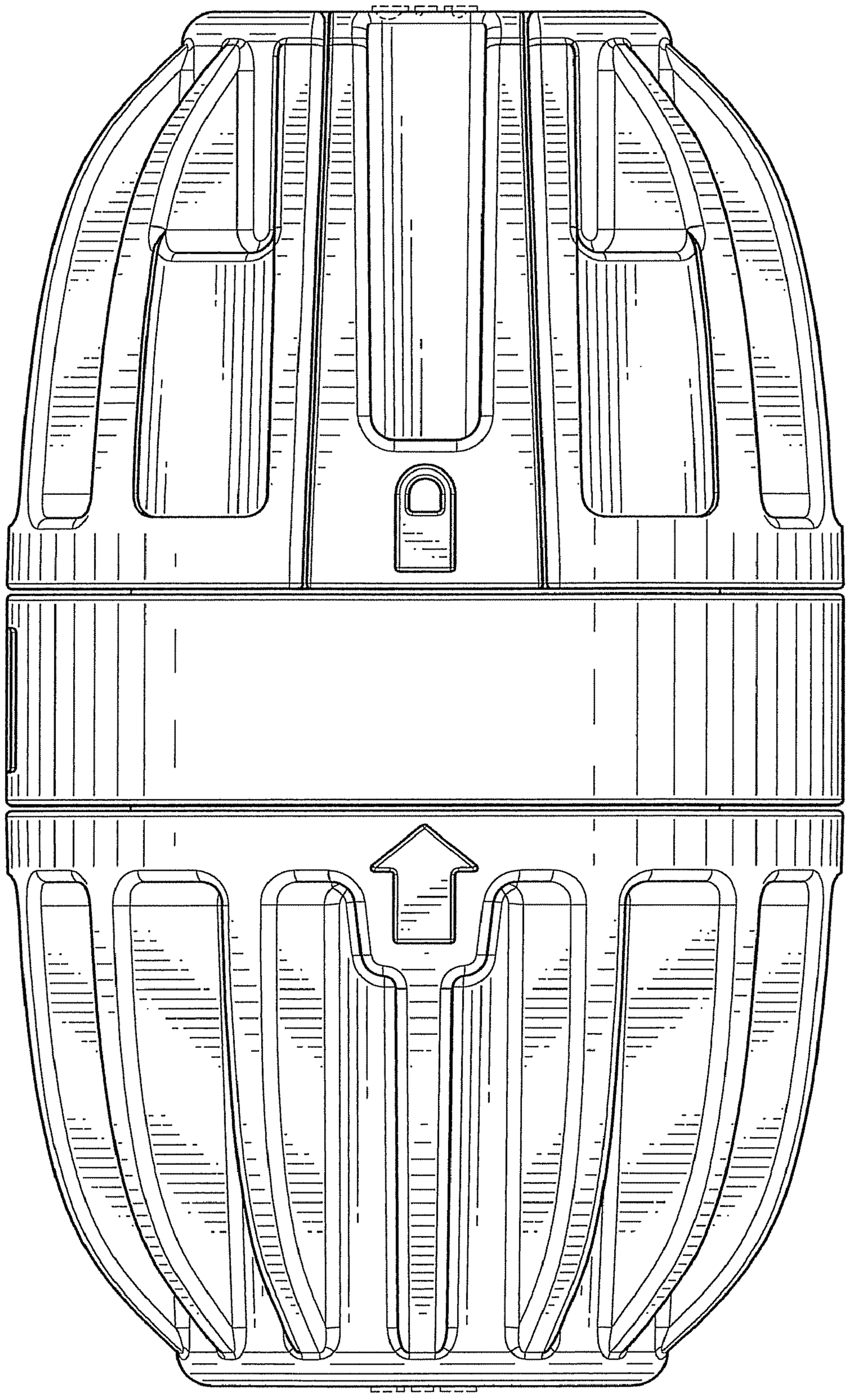

FIG–5

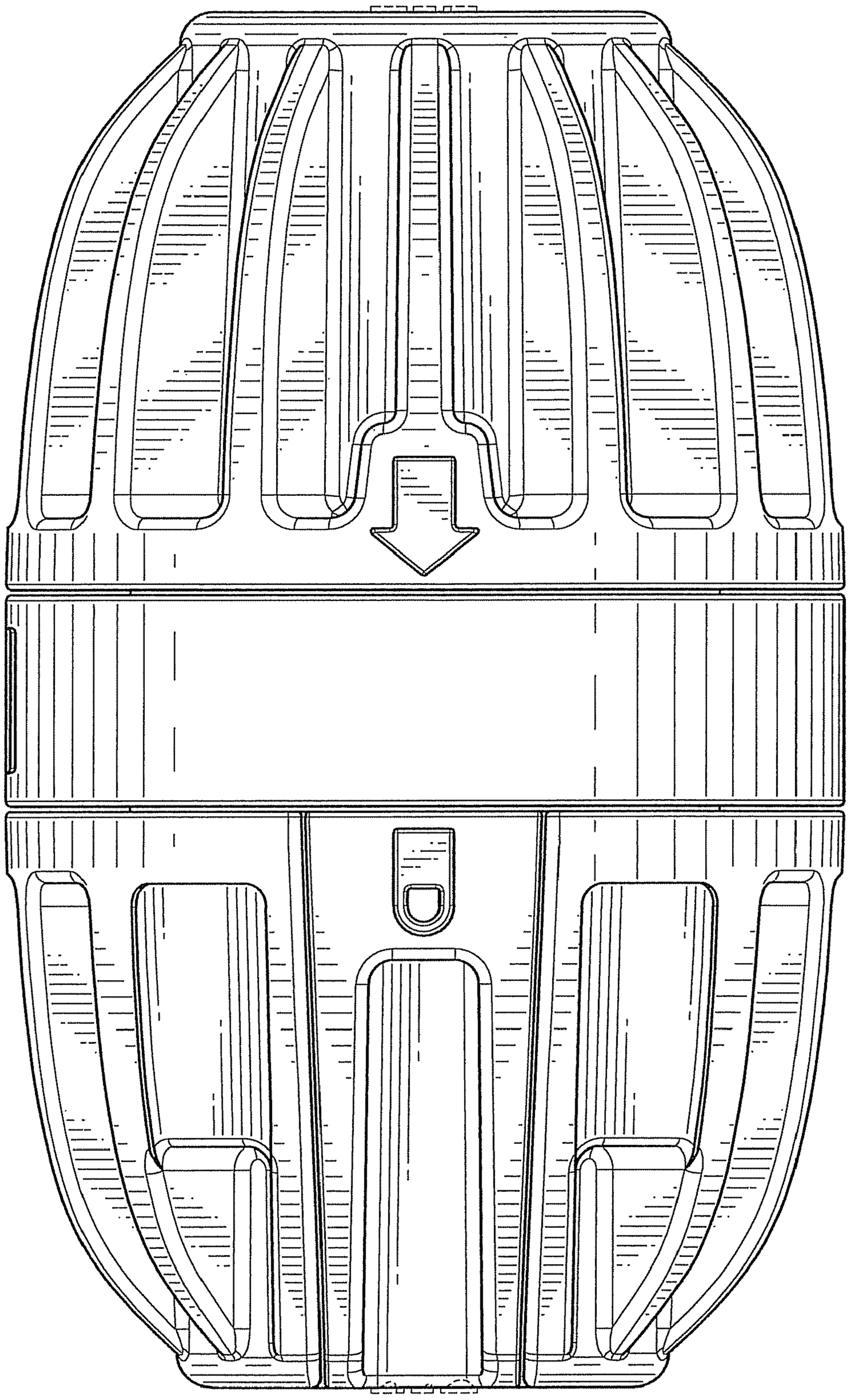

FIG–6