US00D616141S

(12) United States Design Patent

Tessnow et al.

(10) Patent No.: US D616,141 S
(45) Date of Patent: ** May 18, 2010

(54) **LAMP OPTIC**

(75) Inventors: **Thomas Tessnow**, Weare, NH (US); **David Hulick**, New Boston, NH (US); **Jack Nudd**, Lempster, NH (US)

(73) Assignee: **Osram Sylvania Inc.**, Danvers, MA (US)

(**) Term: **14 Years**

(21) Appl. No.: **29/316,848**

(22) Filed: **Nov. 6, 2009**

(51) **LOC (9) Cl.** **26-99**
(52) **U.S. Cl.** **D26/124**
(58) **Field of Classification Search** D26/2, D26/142, 134, 129, 124, 118, 128, 113, 121, D26/125, 131, 130, 60, 61, 138, 93, 102, D26/103, 106, 107, 110, 147, 153, 149, 141, D26/145, 155, 24, 63, 120, 122, 123, 65, D26/88; D8/396; 362/294, 98, 641, 257, 362/269, 270, 277, 279, 285, 341, 347, 350, 362/351, 363, 395, 410
See application file for complete search history.

(56) **References Cited**

U.S. PATENT DOCUMENTS

182,668	A	*	9/1876	Hobbs	362/340
D54,511	S	*	2/1920	Owen	D26/88
1,502,617	A	*	7/1924	Cline	362/348
1,791,718	A	*	2/1931	McDougall et al.	362/291
2,022,684	A	*	12/1935	Miller	40/563
D109,899	S	*	5/1938	McCabe	D26/135
D160,636	S	*	10/1950	Lederer	D26/142
4,410,933	A	*	10/1983	Blake et al.	362/371
D277,511	S	*	2/1985	Patel	D26/68
D297,672	S	*	9/1988	Skegin	D26/63
D315,418	S	*	3/1991	Layne	D26/63
D323,566	S	*	1/1992	Woodgate	D26/63
5,101,454	A		3/1992	Blonder et al.	
D330,944	S	*	11/1992	Wereley	D26/63
D345,021	S	*	3/1994	Storey et al.	D26/27
5,290,169	A		3/1994	Friedman et al.	
D373,841	S	*	9/1996	Wandler et al.	D26/63
5,592,578	A		1/1997	Ruh	

(Continued)

FOREIGN PATENT DOCUMENTS

JP	2008-084619	4/2008

OTHER PUBLICATIONS

Philips EnduraLED Family Candle, Brochure and Product Displayed at Light Fair 2009 Trade Show, May 5, 2009, New York City.

(Continued)

Primary Examiner—Cathron C Brooks
Assistant Examiner—Kevin K Rudzinski
(74) *Attorney, Agent, or Firm*—Edward S. Podszus

(57) **CLAIM**

The ornamental design for a lamp optic, as shown and described.

DESCRIPTION

FIG. **1** is a perspective view of a lamp optic as seen from the top, front side, wherein the broken line disclosure is for environmental purposes only and does not form a part of the claimed design;

FIG. **2** is a top plan view thereof;

FIG. **3** is a front elevational view thereof, the lamp optic being rotationally symmetric except for the unclaimed broken line disclosure; and,

FIG. **4** is a bottom plan view thereof.

1 Claim, 4 Drawing Sheets

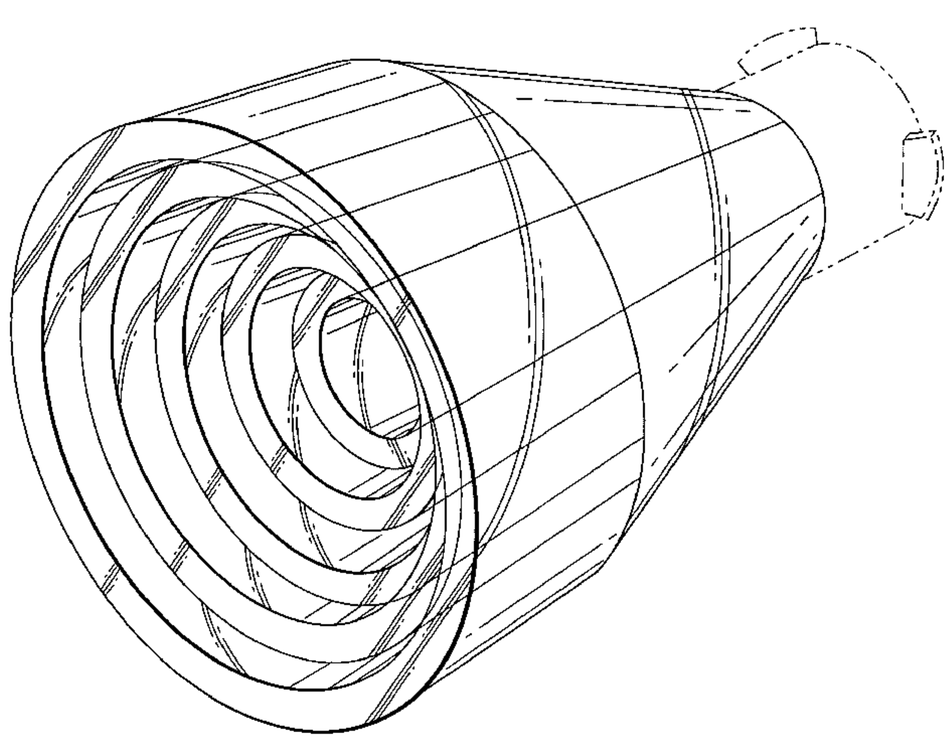

U.S. PATENT DOCUMENTS

D399,583	S	*	10/1998	Giese et al.	D26/63
D402,773	S		12/1998	Lo	
D408,573	S	*	4/1999	Kay	D26/68
D411,643	S	*	6/1999	Lin	D26/108
D416,350	S	*	11/1999	Porter	D26/131
6,056,426	A		5/2000	Jenkins	
D433,763	S	*	11/2000	Donato	D26/63
D436,682	S	*	1/2001	Ewing et al.	D26/85
D464,764	S	*	10/2002	Stephens	D26/110
D468,475	S	*	1/2003	De Lucchi	D26/90
D478,393	S	*	8/2003	Alduby	D26/118
6,724,543	B1		4/2004	Chinniah et al.	
D509,314	S	*	9/2005	Rashidi	D26/74
6,981,784	B2		1/2006	Dubuc	
7,160,010	B1		1/2007	Chinniah et al.	
7,172,314	B2		2/2007	Currie et al.	
7,182,486	B1	*	2/2007	Miracle	362/346
7,286,296	B2		10/2007	Chaves et al.	
D562,486	S	*	2/2008	Luke	D26/61
D575,444	S	*	8/2008	Lissoni	D26/137
D577,848	S	*	9/2008	Convey	D26/73
7,465,075	B2		12/2008	Chinniah et al.	
D591,896	S	*	5/2009	Plonski et al.	D26/118
2005/0068777	A1		3/2005	Popovic	
2007/0171641	A1		7/2007	Sasson	

OTHER PUBLICATIONS

Patent Abstracts of Japan, Publication No. 2008-084619, Publication Date: Mar. 10, 2008.
Machine Translation of JP2008-084619, Publication Date: Mar. 20, 2008.

* cited by examiner

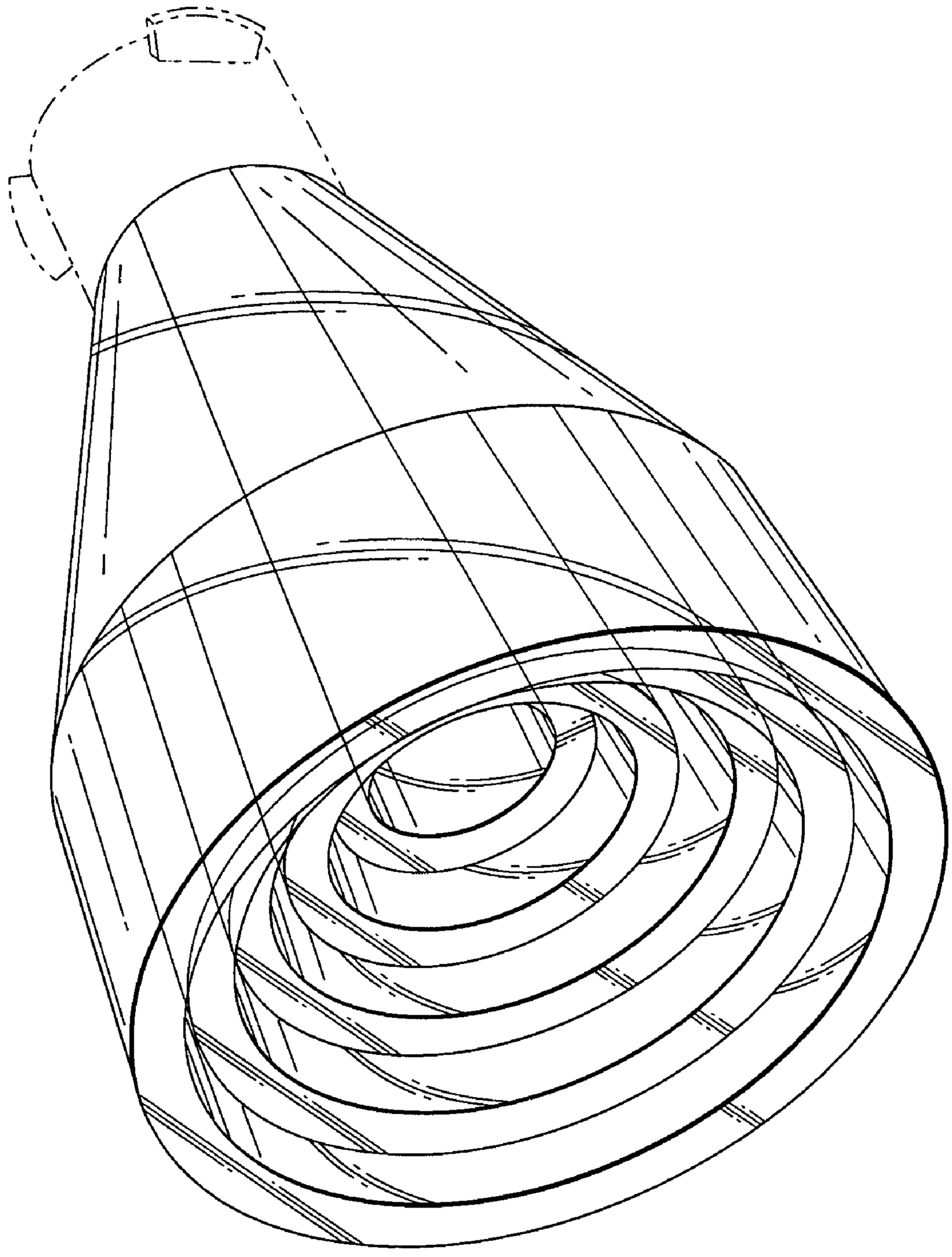

FIG. 1

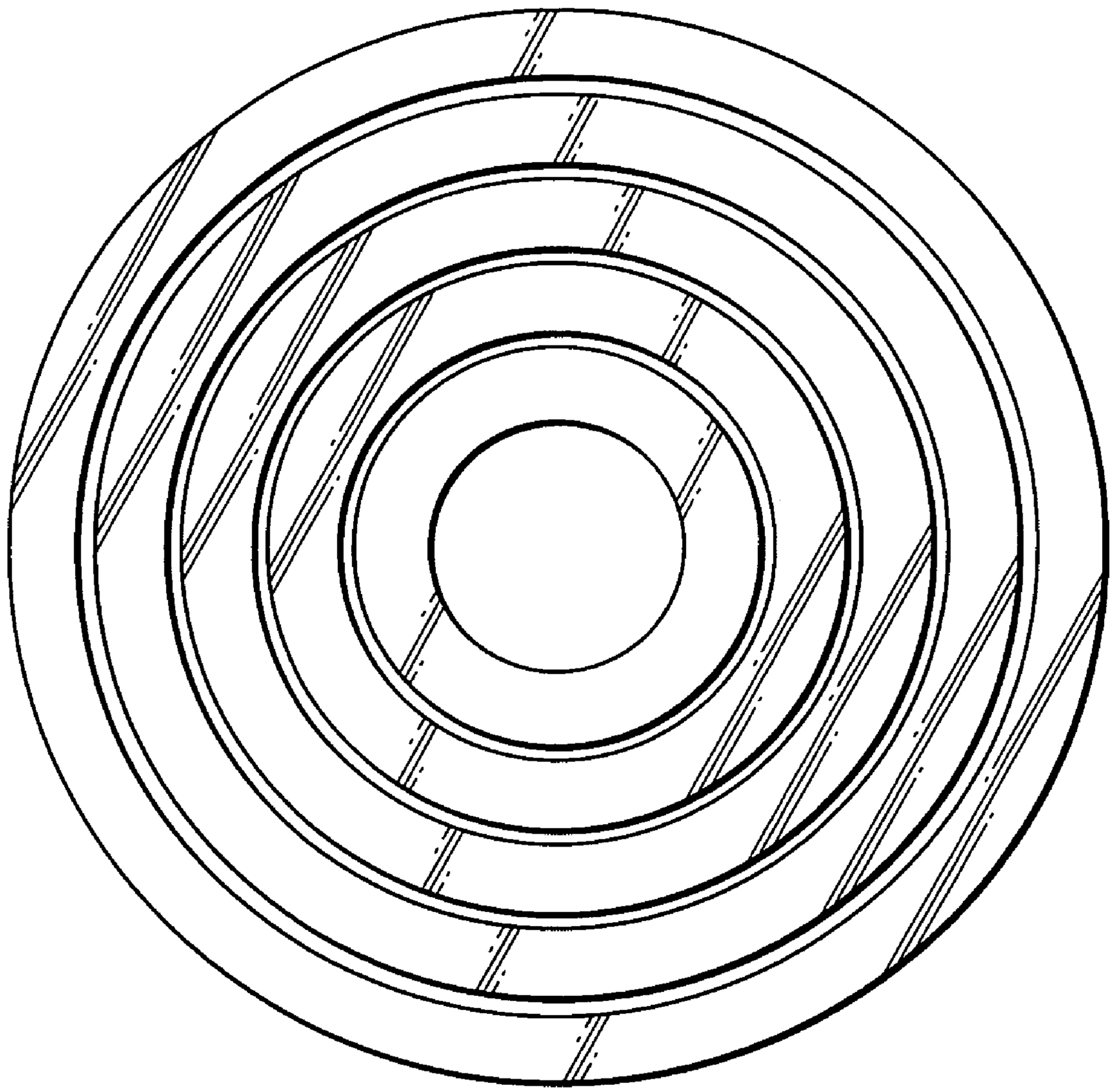

FIG. 2

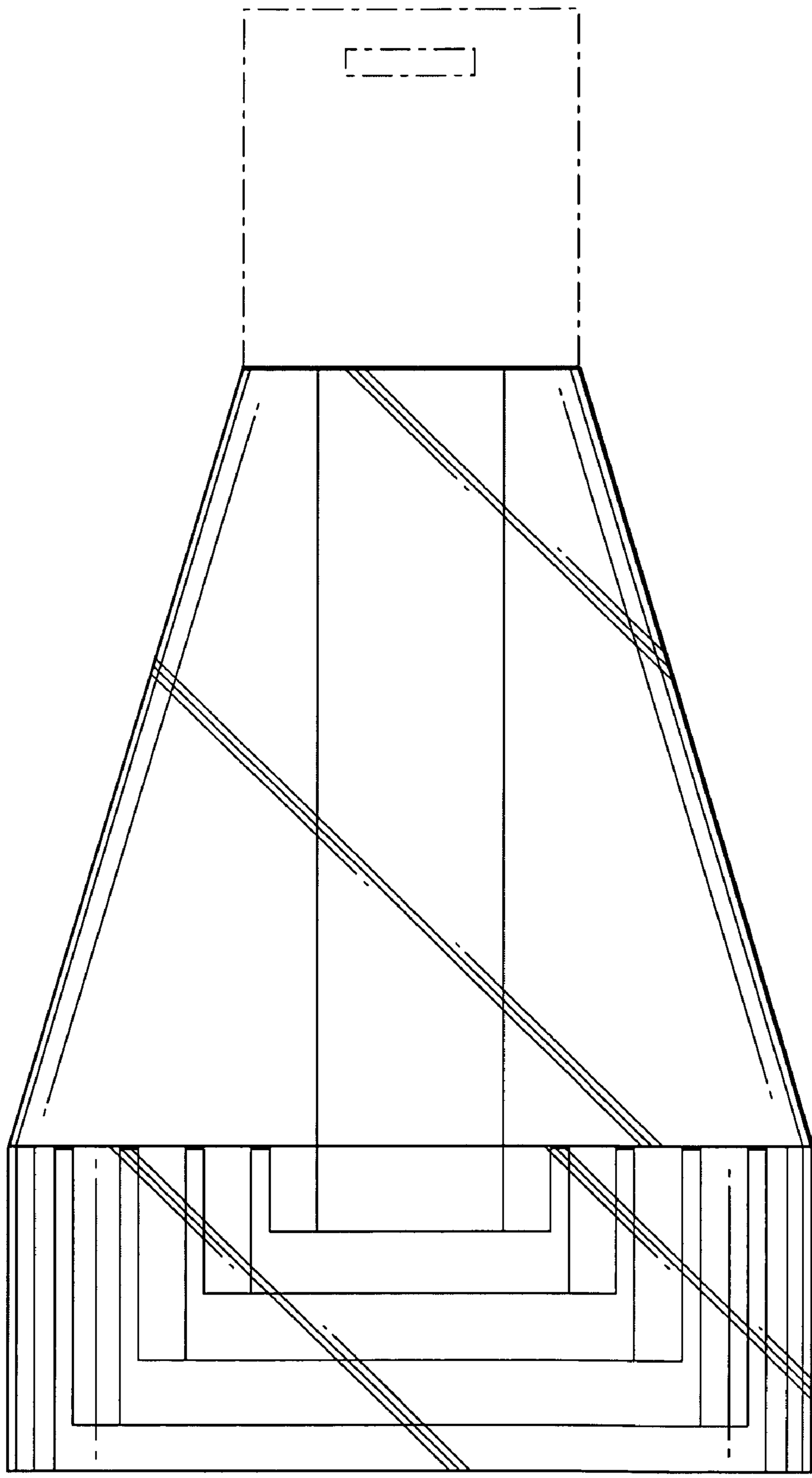

FIG. 3

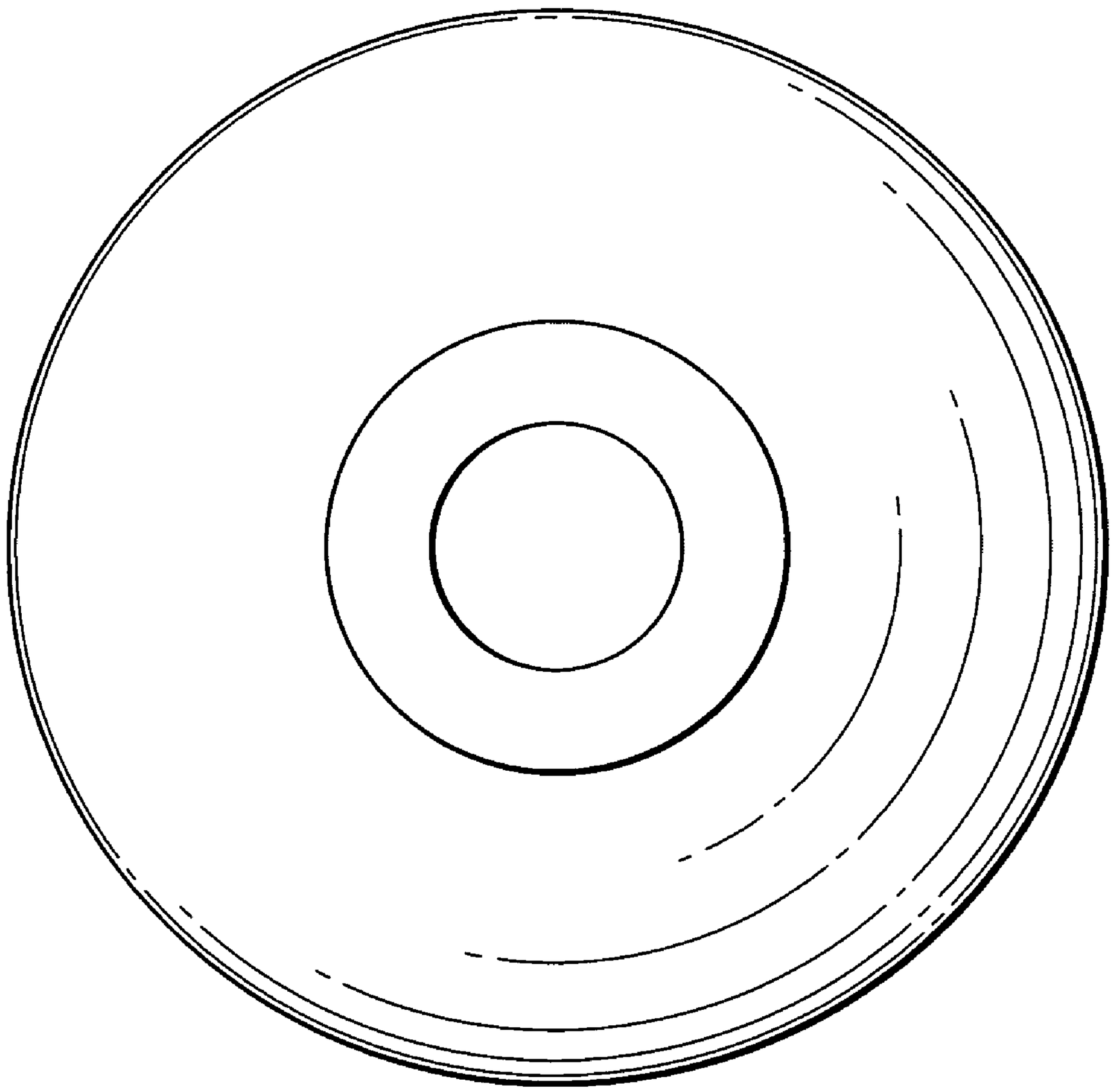

FIG. 4